RENOWNED KNOW-HOW
Automation Technology

RK ROSE+KRIEGER
A Phoenix Mecano Company



# Linear Technology

# How to use this catalogue

**Depending on your level of experience, we suggest you proceed as follows**

## If you are new to linear technology

Please use our selection guide from page 9 onwards.
We will guide you to the right product for your particular application.

## If you know all about linear technology

You know exactly what you require and can go straight to the right product category, where you will find a product overview on the first pages.

## Specific search

...if you are looking for a specific product, we suggest you start in our index on the last pages of this catalogue.

**If you have any questions, do not hesitate to contact one of our product consultants.**

## Introduction

- About Us
- Service
- Our products
- Level of service

From page 4

## Linear Technology - Selection guide

- Systematic product range
  (What is linear technology?)
- Four steps to your recommended product
  (How do I find the right product?)

From page 9

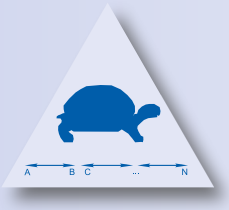


## Move-Tec

- Width, length and height adjustment

From page 21




## Place-Tec

- Loading and unloading, palletising, pick & place

From page 319

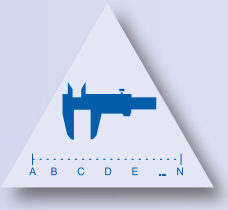


## Control-Tec

- Numerically controlled positioning

From page 444

## Motors and controls

From page 518

## Modules

From page 574

## Appendix

From page 583

- Lubricants
- Glossary
- Fax enquiries
- Index

# About Us

As a subsidiary of the global Phoenix Mecano AG, we offer an unrivalled range of products in the fields of linear, profile, connecting and module technology. With decades of experience and expertise in a huge range of industrial applications, you need look no further for a highly competent partner. From the first point of contact through to delivery, we focus entirely on your requirements. Individual advice and short delivery periods are two central priorities in our customer-focused corporate philosophy. Our aim is your success, and we look forward to being your strategic partner.



**Head Office:** Germany, Minden/Westph.

- ✓ Company sales representatives
- ✓ Distributors and system partners

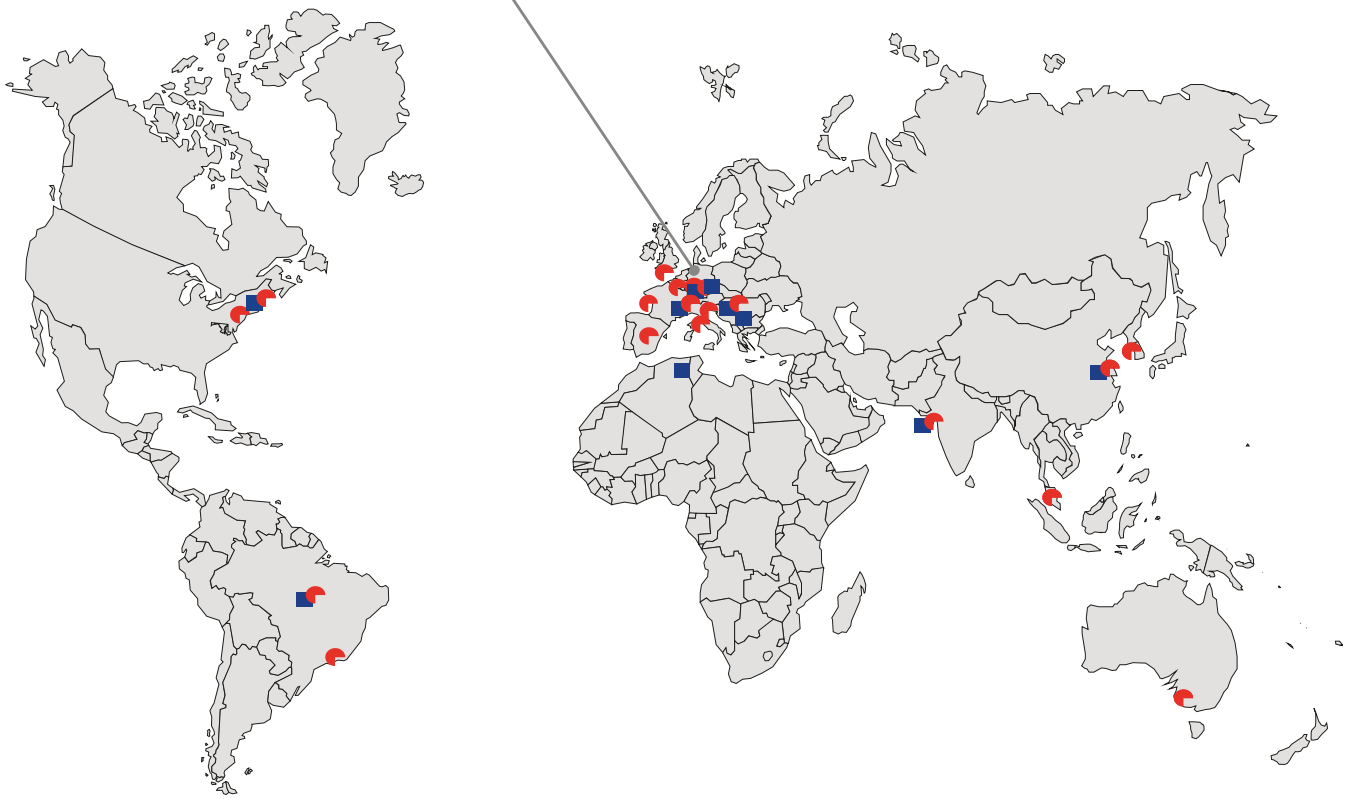

**Available around the globe.**

- ✓ Profit Centre within Phoenix Mecano
- ✓ Sales and system partners

■ = Production facilities

● = Distribution companies

RK ROSE+KRIEGER

A Phoenix Mecano Company

# Our product range

RK ROSE+KRIEGER

## LINEAR TECHNOLOGY

- ✓ Linear actuators
- ✓ Manual guide units
- ✓ Electric cylinders
- ✓ Lifting columns
- ✓ We can move loads for you of up to 3 t and up to 12 m dynamically, reliably and with great precision

**Movement and positioning**

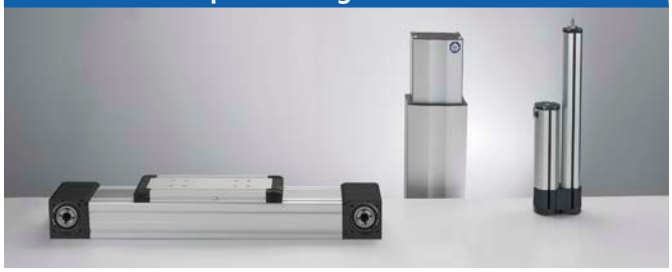

## CONNECTING TECHNOLOGY

- ✓ Fittings for the secure clamp connection of round and square profiles
- ✓ Elements made of aluminium, stainless steel and plastic
- ✓ Sizes from 8 mm to 80 mm

**Clamp and release solutions**



## PROFILE TECHNOLOGY

- ✓ The proven and tested BLOCAN® aluminium assembly system, with profiles offering cross-sections from 20 mm to 320 mm, for a broad spectrum of applications
- ✓ Connection techniques with an unsurpassed combination of flexibility and reliability

**Mix'n'match**



## MODULE TECHNOLOGY

- ✓ We develop, manufacture and assemble
- ✓ Machine frames
- ✓ Workstations
- ✓ Machine guards
- ✓ Multidimensional linear actuator modules
- ✓ Complete drive solutions

**Consultancy services and optimisation**

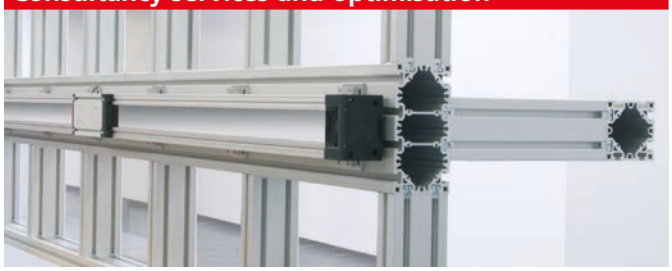

## We help you make the right choice:

### CAD component library

To help you design your products, we give you free access to the component data stored in our Rose+Krieger component library (drawings, technical descriptions). This library lets you choose between around 60 different file formats (2D/3D). The link to our component server can be found on our web site at: www.rk-rose-krieger.com/deutsch/service/cad-daten.html

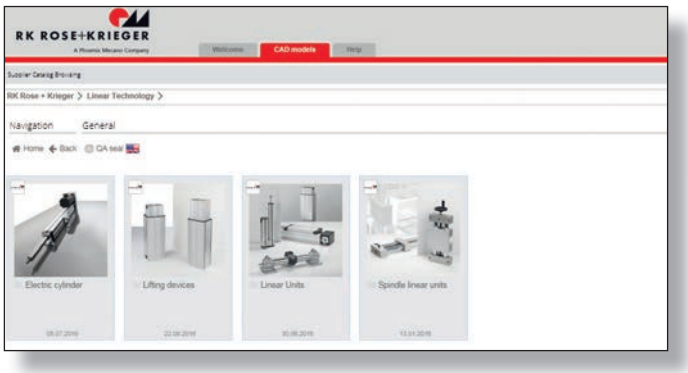


### In-house RK product consultancy

The RK infovan - our showroom on your doorstep. With more than 20 presentation boards containing exhibits and functional samples and a range of applications from the world of drive and linear technology, our infovan provides a complete cross-section of the RK products currently available.
Our Key Account managers and sales consultants are happy to visit you on site and help you draw up concrete proposals for practical solutions.





### RK website: www.rk-rose-krieger.com

At our website you will find a wealth of information on our company and our products. You will also find the details of company contacts in your area and the latest catalogues (PDF format) available to download.

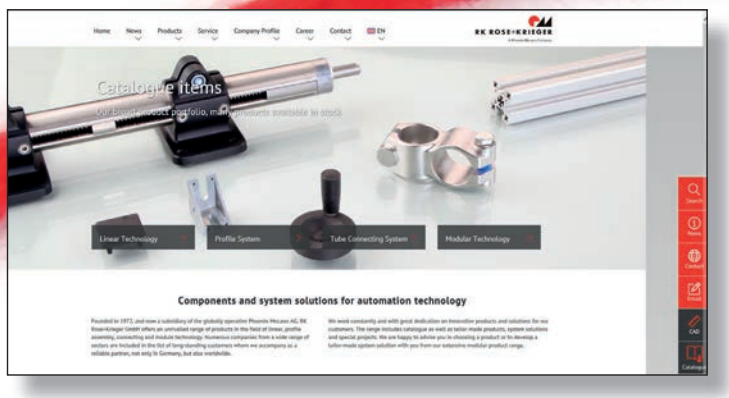

Do you need to focus your resources on other tasks and are you looking for an expert partner you can rely on? Working in close collaboration with you, our specialists will develop solutions tailor-made to meet your needs. If you wish, we can also assemble and commission the units on site.

**Just make a sketch of your requirements**

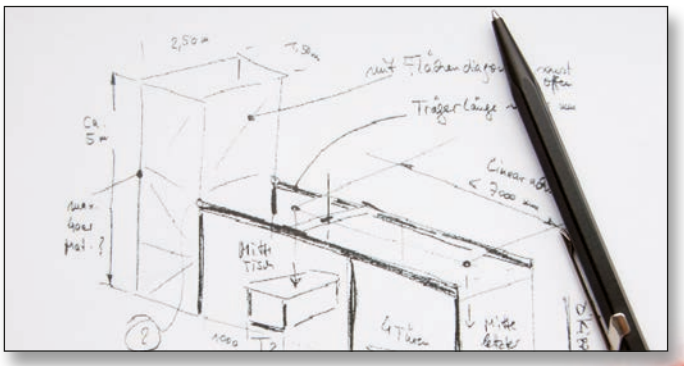

**Our product specialists will develop a solution for you**



**We can deliver your turnkey solution or assemble and commission it for you on site**



# Level of service

## You decide...

100%



**Modules and systems**
You require your skills and time for other tasks and are looking for a partner you can rely on.



**Customised developments**
Are you looking for something completely new. Then we'll team up with you to develop it.



**Different models, modified standards**
Our expertise at your fingertips. Our expert consultants can recommend the optimum products modified to your requirements.



**Catalogue items**
If you know what you want and take the time to browse our catalogue, you are sure to find what you're looking for in our standard range.

## ...what level of service you require

0%

## We offer

- ✓ A broad range of compatible products
- ✓ 40 years of experience in numerous industries
- ✓ Expert advice for all your requirements
- ✓ Quality – because we deliver what we promise

LINEAR-PROFILE-CONNECTING-MODULE-TECHNOLOGY

RK ROSE+KRIEGER



Contents


What is linear technology? .... Page 10

How to find the right product ... Page 11

The RK linear circle..... Page 12-13

Move-Tec..... Page 14-15

Place-Tec..... Page 16-17

Control-Tec..... Page 18


# Selection guide

## What is Linear Technology?

Whether guiding, adjusting, positioning or moving uniformly, the demands on linear motion sequences are as varied as the available solutions. We offer a broad spectrum of linear movement components: from the occasional manual adjustment, through to frequent movements and highly dynamic positioning in continuous operation.

And to help you select the most suitable range of products for your requirements quickly and easily, we have developed a system that is strictly application-oriented. Within the selected range you can then determine the ideal size and model based on your performance requirements.
And if you need any further help, we are only too happy to assist.

## Why waste time with trial and error…



**…when we can offer a fast and systematic solution**

## Four steps to your recommended product

**Step 1:**



### Your application takes centre stage

- Width, length and height adjustment
- Loading and unloading, palletising, pick & place
- Numerically controlled positioning applications

---

**Step 2:**



### Which product version do you require?

- Rodless style (linear actuator)
- Rodstyle (E-cylinder, lifting column)

---

**Step 3:**



### What functions do your require the product to perform?

- Guide
- Drive
- Guide + drive

---

**Step 4:**

### Which performance category do you require?

- Stroke length
- Load
- Speed
- Accuracy
- etc.

**...just follow our system and you'll find the terms are self-explanatory**

# The RK linear circle



**Width, length and height adjustment**

**Features:**

- ✓ Manual or electric drive
- ✓ Occasional to multiple adjustments daily
- ✓ Low duty cycle
- ✓ Low speed
- ✓ Medium to high stability

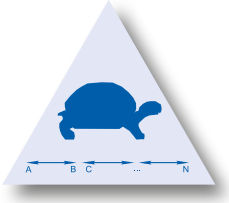


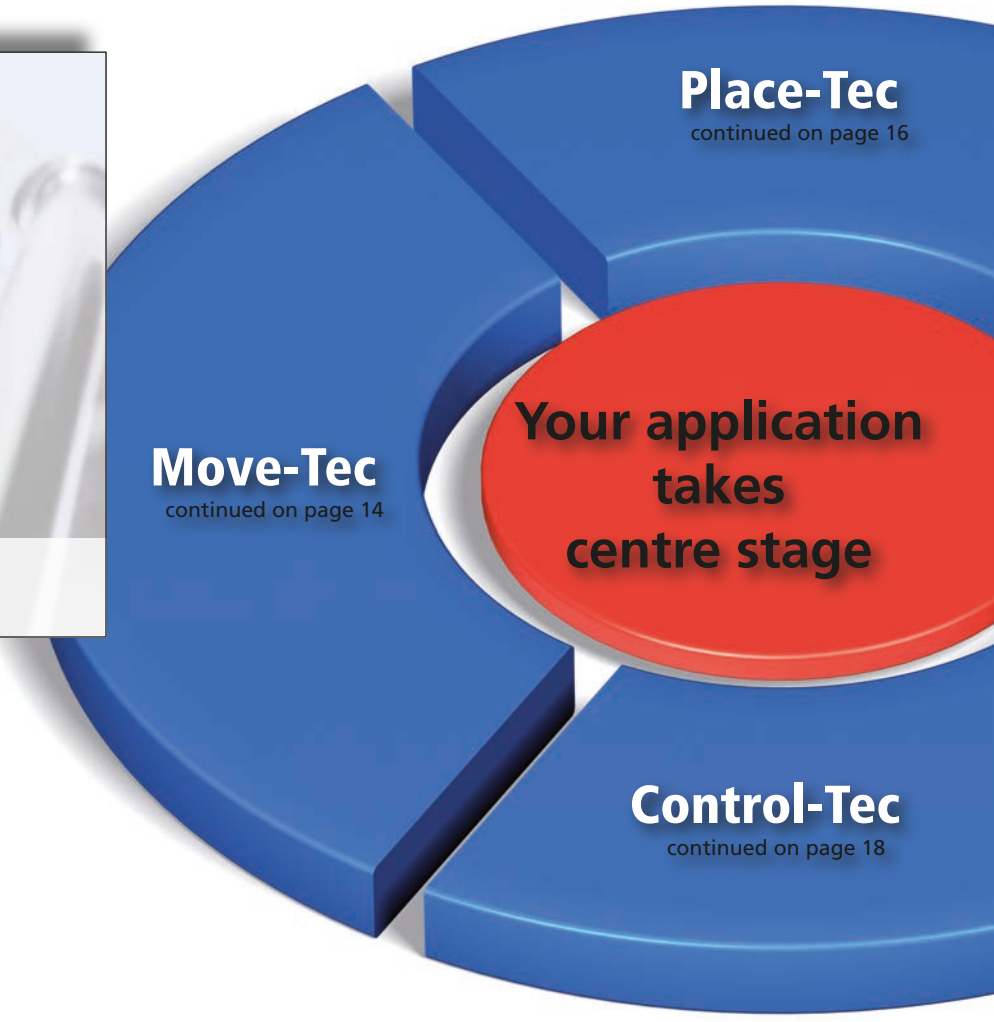



Loading and unloading, palletising, pick & place

**Features:**

- ✓ High repeatability
- ✓ Short cycle times
- ✓ High cycle rates
- ✓ 3 shift operation
- ✓ High reliability






Numerically controlled positioning applications

**Features:**

- ✓ High positioning accuracy
- ✓ Uniform motion
- ✓ High drive stiffness
- ✓ 3 shift operation
- ✓ IP 40 protection class

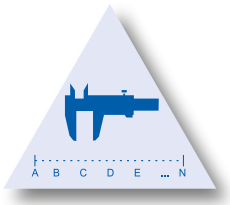

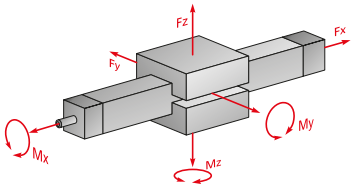


## Rodless style
(up to 6 m travel)

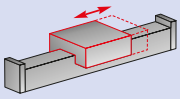

### Guide

#### Twin tube

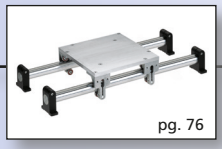
pg. 76

**RE**
Max. travel: 3,000 mm
Fy max: 600 N
Fz max: 2,400 N

### Drive + Guide
(linear actuator)

#### Single tube actuators

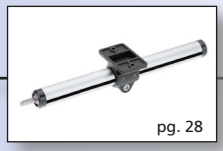
pg. 28

**RK LightUnit**
Max. travel: 920 mm
Fx max: 300 N
Fy max: 550 N
Fz max: 1,210 N

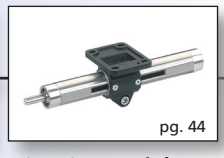
pg. 44

**E / E-II / E-II-stainless**
Max. travel: 2,740 mm
Fx max: 4,500 N
Fy max: 5,500 N
Fz max: 5,650 N

#### Twin tube

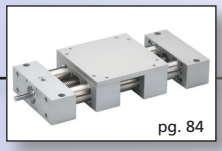
pg. 84

**EP(X) / EP(X)-II**
Max. travel: 2,760 mm
Fx max: 4,500 N
Fy max: 14,000 N
Fz max: 9,100 N

## Rodstyle
(up to 2 m travel)

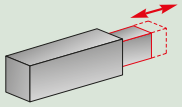

### Drive
(E-cylinder)

#### Cylinders - performance class 1*



**M9 E-cylinder**
Travel: 50 mm
Fd max: 300 N
Fz max: 300 N
Vmax: 14 mm/s

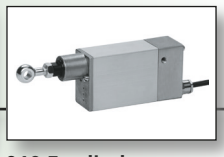

**010 E-cylinder**
Max. travel: 100 mm
Fd max: 500 N
Fz max: 500 N
Vmax: 22 mm/s

#### Cylinders -

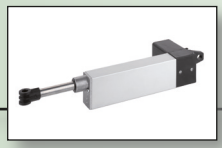

**015 E-cylinder**
Max. travel: 140 mm
Fd max: 1,000 N
Fz max: 1,000 N
Vmax: 100 mm/s

### Drive + Guide
(lifting column)



**Multilift**
Max. travel: 498 mm
Fd max: 3,000 N
Fz max: 1,000 N
Vmax: 16 mm/s



**Multilift II**
Max. travel: 497 mm
Fd max: 3,000 N
Fz max: 3,000 N
Vmax: 16 mm/s

#### Two-stage

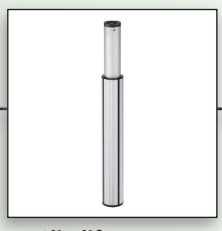

**RK Slimlift**
Max. travel: 500 mm
Fd max: 4,000 N
Fz max: 2,000 N
Vmax: 32 mm/s

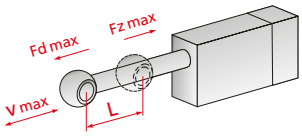


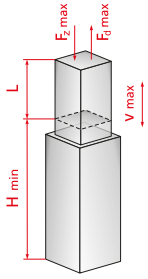


## guides

### Profile guides

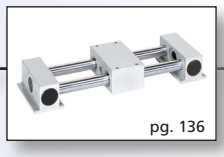
pg. 136

**RC**
Max. travel: 2,250 mm
Fy max: 3,500 N
Fz max: 5,200 N

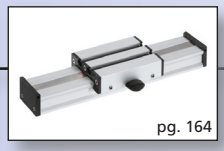
pg. 164

**PLM-G**
Max. travel: 2,935 mm
Fy max: 200 N
Fz max: 220 N

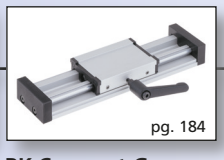
pg. 184

**RK Compact-G**
Max. travel: 400 mm
Fy max: 1,150 N
Fz max: 1,150 N

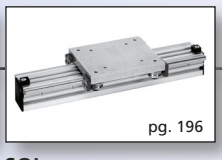
pg. 196

**SQL**
Max. travel: 5,750 mm
Fy max: 2,500 N
Fz max: 1,500 N

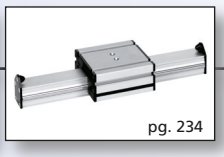
pg. 234

**PL**
Max. travel: 5,860 mm
Fy max: 2,550 N
Fz max: 2,550 N

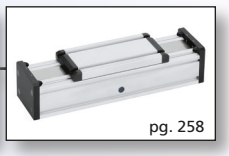
pg. 258

**RK DuoLine R**
Max. travel: 7,692 mm
Fy max: 5,100 N
Fz max: 8,900 N

## actuators

### Profile actuators

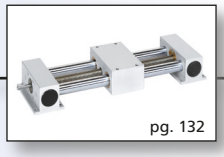
pg. 132

**COPAS**
Max. travel: 2,250 mm
Fx max: 1,600 N
Fy max: 3,500 N
Fz max: 5,200 N

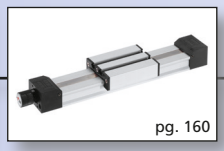
pg. 160

**PLM**
Max. travel: 855 mm
Fx max: 125 N
Fy max: 200 N
Fz max: 220 N

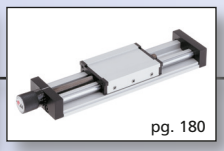
pg. 180

**RK Compact**
Max. travel: 400 mm
Fx max: 215 N
Fy max: 1,150 N
Fz max: 1,150 N

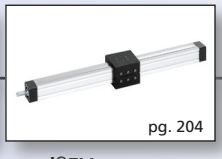
pg. 204

**quad®EV**
Max. travel: 2,850 mm
Fx max: 2,500 N
Fy max: 6,000 N
Fz max: 6,000 N

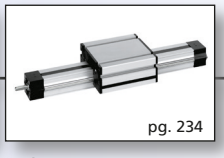
pg. 234

**PLS**
Max. travel: 3,000 mm
Fx max: 3,050 N
Fy max: 2,550 N
Fz max: 2,550 N

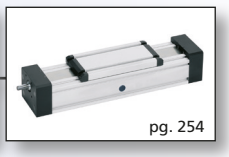
pg. 254

**RK DuoLine S**
Max. travel: 2,984 mm
Fx max: 3,400 N
Fy max: 5,000 N
Fz max: 6,000 N

## performance class 2*

### Heavy duty cylinders



**LAMBDA E-cylinder**
Max. travel: 600 mm
Fd max: 6,000 N
Fz max: 4,000 N
Vmax: 21 mm/s

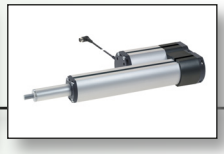

**LZ 60 E-cylinder**
Max. travel: 597 mm
Fd max: 4,000 N
Fz max: 4,000 N
Vmax: 85 mm/s

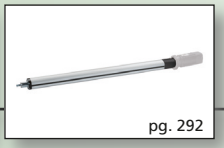
pg. 292

**LZ 70 TR PL E-cylinder**
Max. travel: 1.000 mm
Fd max: 5,000 N
Fz max: 5,000 N
Vmax: 48 mm/s


pg. 284

**LZ 80 E-cylinder**
Max. travel: 1,005 mm
Fd max: 10,000 N
Fz max: 10,000 N
Vmax: 25 mm/s


pg. 292

**LZ 80 TR PL E-cylinder**
Max. travel: 1,005 mm
Fd max: 10,000 N
Fz max: 10,000 N
Vmax: 27 mm/s

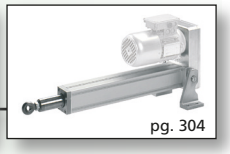
pg. 304

**SLZ 90 E-cylinder**
Max. travel: 2,000 mm
Fd max: 25,000 N
Fz max: 25,000 N
Vmax: 77 mm/s

## lifting columns*

### Multi stage lifting columns*



**RK Powerlift**
Max. travel: 500 mm
Fd max: 3,000 N
Fz max: 1,500 N
Vmax: 50 mm/s



**RK Multilift II telescope**
Max. travel: 650 mm
Fd max: 1,600 N
Fz max: 800 N
Vmax: 30 mm/s



**RK Powerlift telescope**
Max. travel: 650 mm
Fd max: 1,600 N
Fz max: 800 N
Vmax: 30 mm/s



**Alpha Colonne**
Max. travel: 600 mm
Fd max: 3,000 N
Fz max: 3,000 N
Vmax: 18 mm/s

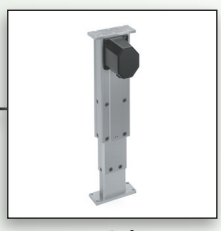

**LAMBDA Colonne**
Max. travel: 600 mm
Fd max: 4,500 N
Fz max: 4,500 N
Vmax: 20 mm/s

*For further details, please refer to the catalog "Linear Technology **Lifting columns and electric cylinders**"

## Rodless style
(up to 6 m travel, D-Line 50 m travel)

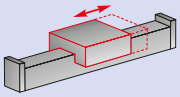

### Guide

**Roller guides**


pg. 326

**PL**
Max. travel: 5,860 mm
Fy max: 2,550 N
Fz max: 2,550 N
v max: 10 m/s
a max: 20 m/s²

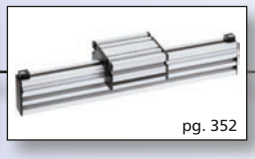
pg. 352

**SQ**
Max. travel: 5,850 mm
Fy max: 2,550 N
Fz max: 2,550 N
v max: 10 m/s
a max: 20 m/s²

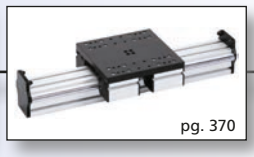
pg. 370

**LM**
Max. travel: 5,670 mm
Fy max: 7,000 N
Fz max: 7,000 N
v max: 10 m/s
a max: 20 m/s²

### Drive + Guide
(linear actuator)

**Roller guide actuators**

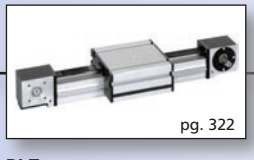
pg. 322

**PLZ**
Max. travel: 5,808 mm
Fx max: 2,810 N
Fy max: 2,550 N
Fz max: 2,550 N
v max: 10 m/s
a max: 20 m/s²
Repeatability ± 0.05 mm

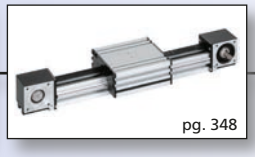
pg. 348

**SQZ**
Max. travel: 5,898 mm
Fx max: 2,810 N
Fy max: 2,550 N
Fz max: 2,550 N
v max: 10 m/s
a max: 20 m/s²
Repeatability ± 0.05 mm

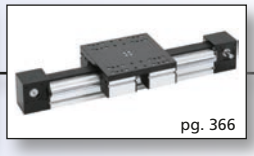
pg. 366

**LMZ**
Max. travel: 5,700 mm
Fx max: 3,400 N
Fy max: 7,000 N
Fz max: 7,000 N
v max: 10 m/s
a max: 20 m/s²
Repeatability ± 0.05 mm

## Rodstyle
(up to 30 m travel)

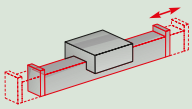

### Drive + Guide
(linear actuator)

**Roller guide actuators**

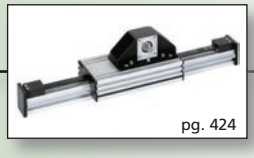
pg. 424

**SQ MT**
Max. travel: 17,446 mm
Fx max: 2,810 N
Fy max: 2,550 N
Fz max: 2,550 N
v max: 10 m/s
a max: 20 m/s²
Repeatability ± 0.05 mm

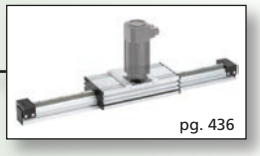
pg. 436

**SQ ZST**
Max. travel: 29,530 mm
Fx max: 1,132 N
Fy max: 2,550 N
Fz max: 2,550 N
v max: 5 m/s
a max: 20 m/s²
Repeatability ± 0.05 mm

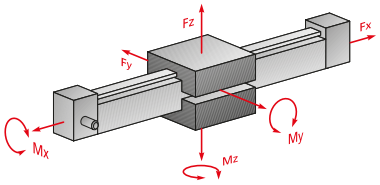


### Ball rail guide


pg. 378

**MultiLine R**
Max. travel: 5,620 mm
Fy max: 8,200 N
Fz max: 12,000 N
v max: 5 m/s
a max: 50 m/s²

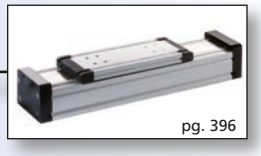
pg. 396

**RK DuoLine R**
Max. travel: 7,692 mm
Fy max: 5,100 N
Fz max: 8,900 N
v max: 5 m/s
a max: 50 m/s²

### Ball rail actuators


pg. 378

**MultiLine**
Max. travel: 5,620 mm
Fx max: 4,700 N
Fy max: 8,200 N
Fz max: 12,000 N
v max: 5 m/s
a max: 50 m/s²
Repeatability ± 0.05 mm


pg. 412

**RK DuoLine Z**
Max. travel: 9,010 mm
Fx max: 6,000 N
Fy max: 5,100 N
Fz max: 8,900 N
v max: 5 m/s
a max: 50 m/s²
Repeatability ± 0.05 mm

### Heavy duty actuators*

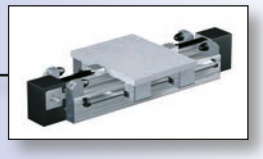

**D-Line** (on request)
Max. travel: 50,000 mm
Fx max: 4,700 N
Fy max: 10,000 N
Fz max: 10,000 N
v max: 5 m/s
a max: 50 m/s²
Repeatability ± 0.1 mm

*For further details, please refer to the catalog **"Heavy duty linear units D-Line"**

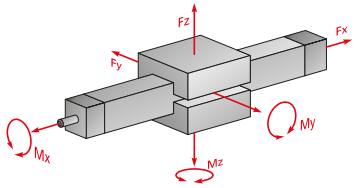


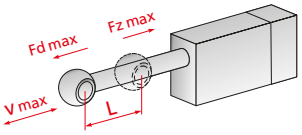


## Rodless style
(up to 4.4 m travel)

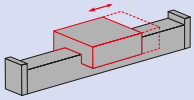

### Guide

**Ball rail guide**

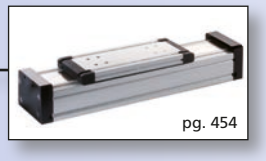
pg. 454

**RK DuoLine R**
Max. travel: 7,692 mm
Fy max: 5,100 N
Fz max: 8,900 N
v max: 5 m/s
a max: 50 m/s²

### Drive + Guide
(linear actuator)

**Ball rail actuators**

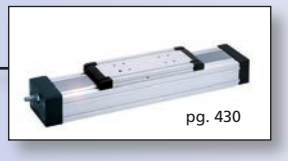
pg. 430

**DuoLine S**
Max. travel: 4,440 mm
Fx max: 8,000 N
Fy max: 7,000 N
Fz max: 8,000 N
Mx max: 500 Nm
My max: 600 Nm
Mz max: 500 Nm
v max: 2,5 m/s
a max: 20 m/s²
Positioning accuracy ± 0.05 mm

## Rodstyle
(up to 2 m travel)

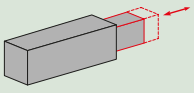

### Drive
(E-cylinders)

**Heavy duty cylinders**


pg. 488

**LZ 70 FL/PL E-cylinder**
Max. travel: 1.000 mm
Fd max: 5,000 N
Fz max: 5,000 N
v max: 1.000 mm/s
Positioning accuracy ± 0,05 mm

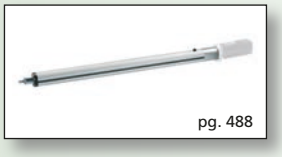
pg. 488

**LZ 80 FL/PL E-cylinder**
Max. travel: 1.005 mm
Fd max: 6,200 N
Fz max: 6,200 N
v max: 284 mm/s
Positioning accuracy ± 0,05 mm

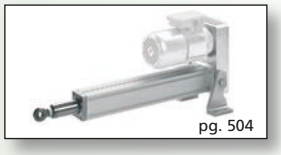
pg. 504

**SLZ 90 E-cylinder**
Max. travel: 1.900 mm
Fd max: 25,000 N
Fz max: 25,000 N
v max: 933 mm/s
Positioning accuracy ± 0,1 mm

# Move-Tec



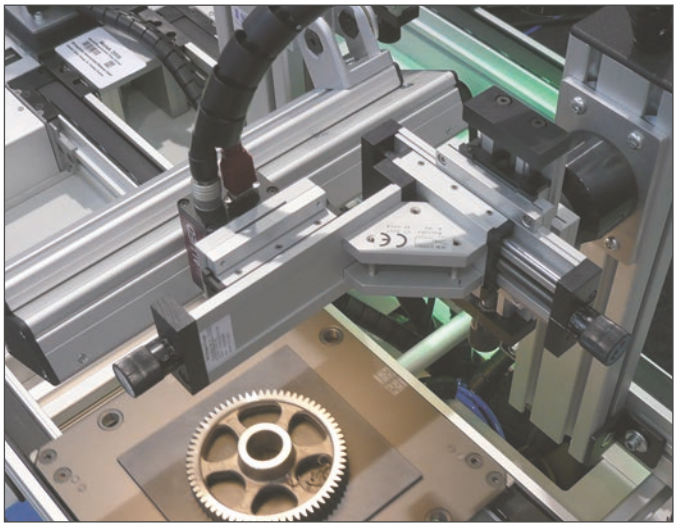

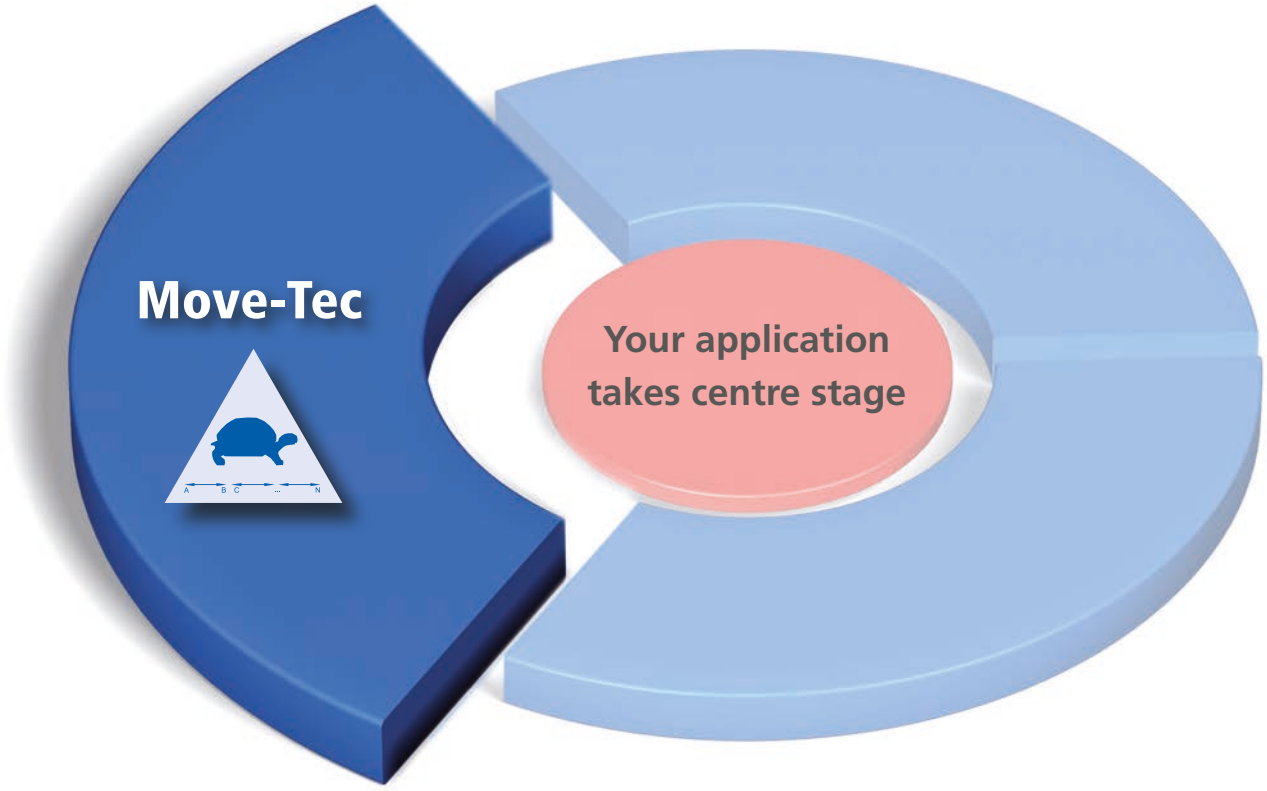


**Move-Tec features:**

- ✓ Manual or electric drive
- ✓ Occasional to multiple adjustments daily
- ✓ Low duty cycle
- ✓ Low speed
- ✓ Medium to high stability

RK ROSE+KRIEGER



## Width, length and height adjustment


Rodless style ..... Page 28 - 281

Rodstyle:

Drive (elec. cylinder) ..... Page 24 - 25

Drive +
Guide (lifting column) ..... Page 26 - 27


# Move-Tec

# Move-Tec overview

## Rodless style | Drive + Guide

The data refers to standard sizes

### Single tube actuators





| Features | RK LightUnit<br>from page 28 | E<br>from page 44 |
|---|---|---|
| Size | 30 | 18, 30, 40, 50, 60, 80 |
| Max. travel | 920 mm | 890-2740 mm |
| Fx max. | 300 N | 400-4500 N |
| Fy max. | 550 N | 90-5500 N |
| Fz max. | 1210 N | 60-5650 N |
| Mx max. | 2.5 Nm | 1.5-70 Nm |
| My max. | 5.5 Nm | 4-170 Nm |
| Mz max. | 5.5 Nm | 4-170 Nm |
| Screw, right or lefthand thread | ● | ● |
| Screw, right and lefthand thread | ● | ● |
| Screw, split | | ● |
| Guide (without drive) | | |
| Features | ✓The “light option” for simple hand adjustments | ✓Flexible all-rounder – a simply unbeatable price/performance ratio |

### Profile actuators/guides







| Features | PLM<br>from page 160 | RK Compact<br>from page 180 | SQL<br>from page 196 |
|---|---|---|---|
| Size | 20, 40 x 20 | 30, 50, 80, 120 | 40, 60, 80, 120, 160 |
| Max. travel | 855 mm | 130-400 mm | 5750 mm |
| Fx max. | 125 N | 50-215 N | – |
| Fy max. | 160-200 N | 160-1150 N | 1500-2500 N |
| Fz max. | 180-220 N | 160-1150 N | 1000-1500 N |
| Mx max. | 3-4 Nm | 3-32 Nm | 50-134 Nm |
| My max. | 10-14 Nm | 3-59 Nm | 70-121 Nm |
| Mz max. | 10-14 Nm | 3-59 Nm | 140-243 Nm |
| Screw, right or lefthand thread | ● | ● | |
| Screw, right and lefthand thread | ● | ● | |
| Screw, split | ● | | |
| Guide (without drive) | ● | ● | ● |
| Features | ✓The small range for positioning small loads | ✓Flat short-stroke linear actuator for hand adjustment – with excellent price-performance ratio | ✓Low-cost guide for medium to heavy loads |

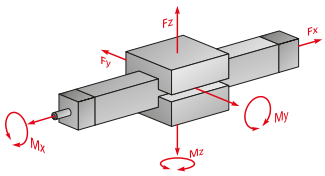


RK ROSE+KRIEGER

## Twin tube actuators/guides







| RE<br>from page 76 | EP(X)<br>from page 84 | COPAS<br>from page 132 |
|---|---|---|
| 30, 40 | 18, 30, 40, 50, 60, 80 | 20, 30, 40 |
| 3000 mm | 320-2610 mm | 1300-2300 mm |
| – | 400-4500 N | 800-1600 N |
| 330-600 N | 200-14000 N | 700-3500 N |
| 1600-2400 N | 100-9100 N | 1000-5200 N |
| 65-155 Nm | 20-650 Nm | 30-234 Nm |
| 65-155 Nm | 30-780 Nm | 22-218 Nm |
| 20-65 Nm | 35-1100 Nm | 32-294 Nm |
| | ● | ● |
| | ● | ● |
| | ● | ● |
| ● | | ● |
| ✓Robust guide for simple adjustment of medium loads | ✓The robust twin tube unit – compensates for high bending moments during manual and motor-driven adjustments | ✓Elegant anodised aluminium design ensures precision running even for high load ratings |



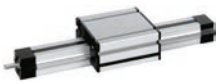



| quad®<br>from page 204 | PLS<br>from page 234 | RK DuoLine S<br>from page 254 |
|---|---|---|
| 30, 40, 50, 60, 80 | 30, 40, 50, 60, 80 | 50, 80, 120 x 80 |
| 1375-4157 mm | 830-3000 mm | 2268-2984 mm |
| 800-2500 N | 340-3050 N | 1400-3400 N |
| 600-6000 N | 790-2550 N | 930-5000 N |
| 600-6000 N | 790-2550 N | 1100-6000 N |
| 6-80 Nm | 14-124 Nm | 45-380 Nm |
| 11-140 Nm | 20-168 Nm | 65-430 Nm |
| 8-85 Nm | 22-169 Nm | 56-370 Nm |
| ● | ● | ● |
| ● | ● | ● |
| ● | | |
| ● | ● | ● |
| ✓Compact and versatile linear actuator for motor-driven and manual adjustment of medium loads | ✓Motor-driven or manual adjustment of medium to heavy loads – easy for the PLS profile linear unit | ✓The all-rounder with encapsulated drive/guiding concept |

# Move-Tec overview

**Order information:**

- For detailed information, please look in our catalogue, “Linear Technology Lifting columns and electric cylinders”

**Rodstyle | Drive + Guide**

## Cylinders performance class 1

All data refer to standard sizes





| Features | M9 | 010 |
|---|---|---|
| Max. travel | 50 mm | 40–100 mm |
| Max. push force | 300 N | 500 N |
| Max. pull force | 300 N | 500 N |
| Max. travel speed | 14 mm/s | 22 mm/s |
| Protection class | IP 30 | IP 40 \| IP 54 |
| Integrated limit switch | ● | + (adjustable) |
| Fitted with signal contact optional | ● | ● |
| Potentiometer optional | ● | ● |
| Features | ✓ Lightweight<br>✓ Bellows | ✓ Range of lifting speeds |

## Cylinders performance class 2

All data refer to standard sizes







| Features | 015 | LAMBDA | LZ 60 P/S |
|---|---|---|---|
| Max. travel | 300 mm | 600 mm | 600 mm |
| Max. push force | 1000 N | 6000 N | 4000 N |
| Max. pull force | 1000 N | 4000 N | 4000 N |
| Max. travel speed | 100 mm/s | 21 mm/s | 85 mm/s |
| Protection class | IP54 | IP 66 | IP 54 |
| Integrated limit switch | + (adjustable) | ● | ● |
| Can be synchronised by means of control system | | ● | ● |
| Fitted with signal contact optional | ● | ● | ● |
| Integr. control | | | ● |
| Potentiometer optional | ● | ● | |
| Features | ✓ Rugged design<br>✓ Adjustable travel | ✓ Clamping protection optional | ✓ Various connections for industrial applications |

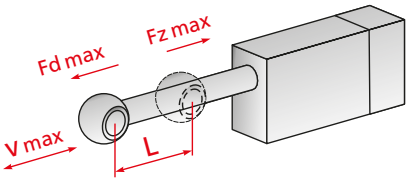


L = Travel
$F_d$ = Push force
$F_z$ = Pull force
V = Travel speed



## Heavy duty cylinders

All data refer to standard sizes






| Features | LZ 80 page 282 | LZ 70 TR PL page 290 | LZ 80 TR PL page 290 | SLZ 90 page 302 |
|---|---|---|---|---|
| Max. travel | 1005 mm | 1000 mm | 1005 mm | 2000 mm |
| Max. push force | 10000 N | 5000 N | 10000 N | 25000 N |
| Max. pull force | 10000 N | 5000 N | 10000 N | 25000 N |
| Max. travel speed | 27 mm/s | 48 mm/s | 27 mm/s | 77 mm/s |
| Protection class | IP 54 \| IP 66 | IP 54 \| IP 66 | IP 54 \| IP 66 | IP 54 |
| Integrated limit switch | ● | | ● | |
| Can be synchronised by means of control system | | motordependent | motordependent | motordependent |
| Fitted with signal contact | ● | | ● | |
| Features | ✓ Industrial cylinder with DC- Motor | ✓ Industrial cylinder with adaptable motor | | |

# Move-Tec overview

**Order information:**

- For detailed information, please look in our catalogue, “Linear Technology Lifting columns and electric cylinders”

## Two-stage lifting columns (up to 500 mm travel)

All data refer to standard sizes





| Features | RK Multilift | RK Slimlift | RK Slimlift EM |
|---|---|---|---|
| Max. travel | 498 mm | 460 mm | 500 mm |
| Max. push force | 3000 N | 4000 N | 1000 N |
| Max. pull force | 1000 N | 2000 N | 1000 N |
| Mx dyn. max | 150 N | 100 N | 75 Nm |
| My dyn. max | 100 N | 100 N | 75 Nm |
| Mx stat. max | 300 N | 200 N | 150 Nm |
| My stat. max | 200 N | 200 N | 150 Nm |
| Max. travel speed | 8/16 mm/s | 8-32 mm/s | 25 mm/s |
| Protection class | IP 20 | IP 30 | IP 30 |
| Integrated limit switch | ● | ● | ● |
| Can be synchronised by means of control system | ● | ● | ● |
| Integr. control | | | |
| Features | ✓ Tested to EN 60601-1 | ✓ Rod-shaped design and extremely quiet operation | ✓ Rod-shaped design and extremely quiet operation<br>✓ Optimum stroke/installation height ratio |

## Two-stage lifting columns (up to 500 mm travel)

All data refer to standard sizes




| Features | RK Powerlift Z | RK Powerlift M |
|---|---|---|
| Max. travel | 490 mm | 500 mm |
| Max. push force | 2000 N | 3000 N |
| Max. pull force | | 1500 N |
| Mx dyn. max | 125 N | 200 N |
| My dyn. max | 125 N | 200 N |
| Mx stat. max | 250 N | 400 N |
| My stat. max | 250 N | 400 N |
| Max. travel speed | 50 mm/s | 13 mm/s |
| Protection class | IP 30 | IP 30 |
| Integrated limit switch | ● | ● |
| Can be synchronised by means of control system | ● | ● |
| Integr. control | ● | ● |
| Features | ✓ High lifting speed | ✓ Tested to EN 60601-1 |

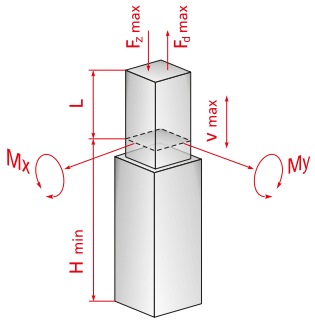


L = Travel
H = Installation dimension
$F_d$ = Push force
$F_z$ = Pull force
V = Travel speed

## Multi-stage lifting columns more than 500 mm travel

All data refer to standard sizes





| Features | RK Powerlift telescope | Alpha Colonne | LAMBDA Colonne |
|---|---|---|---|
| Max. travel | 650 mm | 700 mm | 600 mm |
| Max. push force | 1600 N | 3000 N | 4500 N |
| Max. pull force | 800 N | 3000 N | 4500 N |
| Mx dyn. max | 125 N | 200 N | 250 N |
| My dyn. max | 125 N | 200 N | 250 N |
| Mx stat. max | 200 N | 200 N | 250 N |
| My stat. max | 200 N | 200 N | 250 N |
| Max. travel speed | 15-30 mm/s | 8-18 mm/s | 8-20 mm/s |
| Protection class | IP 30 | IP 30 | IP 54 \| IP 40 |
| Integrated limit switch | ● | ● | ● |
| Can be synchronised by means of control system | ● | ● | ● |
| Integr. control | ● | ● | |
| Features | ✓ Optimal stroke/installation height ratio | ✓ Suitable for push and pull force | ✓ Guides set to minimum backlash |

## Preferred field of application

**Mono columns**
(single or joint movementl)

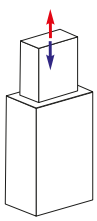

**Individual operation / Mono operation**

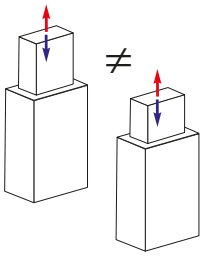

**Parallel operation**

**Synchronised columns (2-32 pc.)**
(can be moved synchronously)

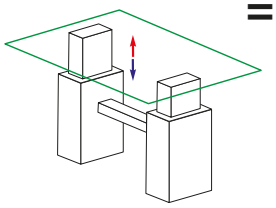

**Synchronised operation**

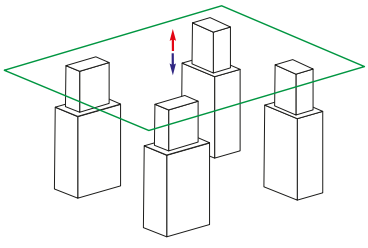

**Multiple column system**

# Single tube actuator – *RK LightUnit*

## The “light option” for simple manual adjustments

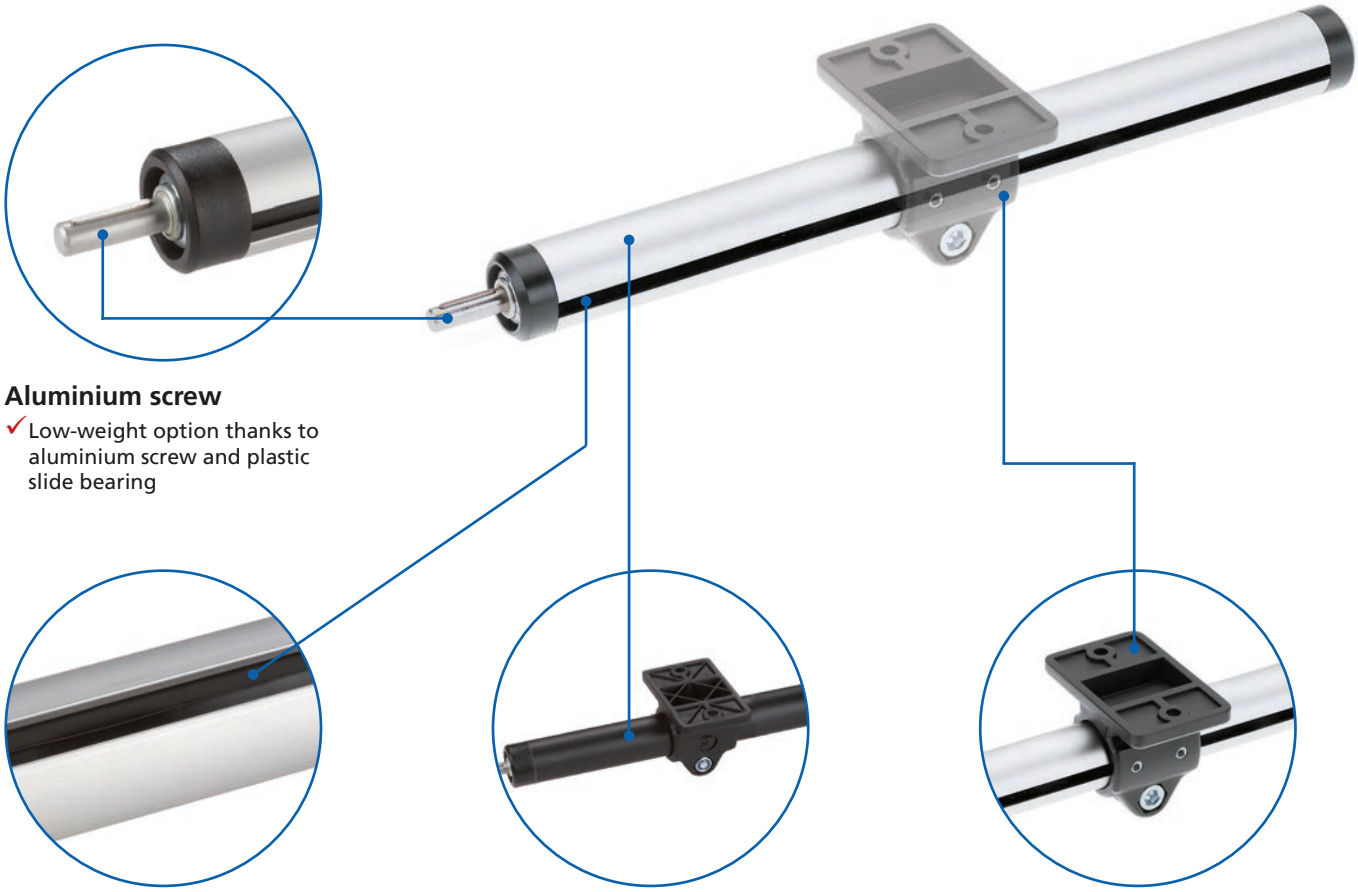

**Aluminium screw**

✓ Low-weight option thanks to aluminium screw and plastic slide bearing

**Screw cover**

✓ An elastic plastic sealing lip protects the screw

**Choice of guiding tube clear or black anodised**

✓ Reduced reflection (e.g. for operation in areas of photography)

**Carriage/fixing elements**

✓ Wide range of models facilitates connection to your set-up

Standard lengths
**48 h**
ready for delivery

### Features:

- Unit for “light” moving applications
- Low-cost manual adjustment
- For applications where the focus is on “weight reduction”
- Suitable for use in areas susceptible to corrosion

### Options:

- Additional non driven carriage as torque support.

# *RK LightUnit* - Table of contents


## Properties/Technical data

- General information/operating conditions ..... 30
- Loaddata ..... 31

## Versions
**(Dimensions, order numbers)**

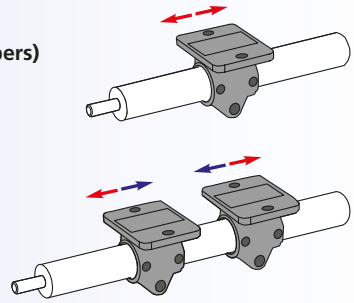

- Right *or* lefthand thread ..... 32 - 33
- Right *and* lefthand thread ..... 34 - 35

## Accessories

**Fixing**

- Carriage ..... 36 - 37
- Fixing elements ..... 38 - 39
- Reducing bushes ..... 40
- Clamping lever ..... 41

**Drive**

- Handwheel ..... 42

**Position determination**

- Positioningindicator ..... 43

## General information/operating conditions

| | |
|---|---|
| **Design** | Actuator with aluminium ACME screw in a slotted aluminium profile |
| **Guide** | Slide guide |
| **Installation position** | Any position |
| **Lead accuracy** | ± 0.3 mm/300 mm travel |
| **Screw lead** | 3 mm |
| **Self-locking** | Yes |
| **No-load torque** | 0.35 Nm |
| **Ambient temperature** | 0°C to +60°C |

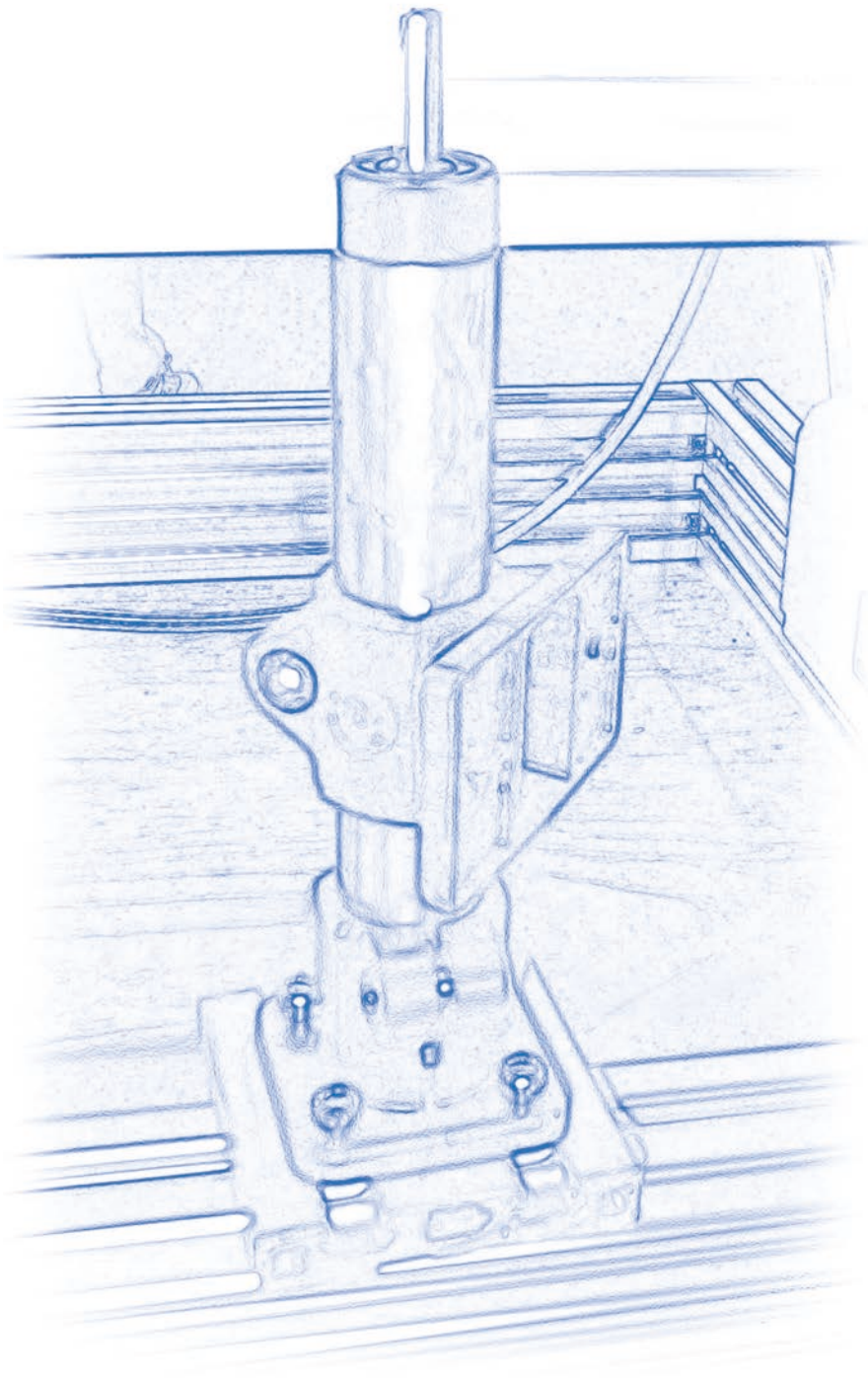

## Load data*

F Force [N]

M Moment [Nm]

I Geometric moment of inertia [$cm^4$]

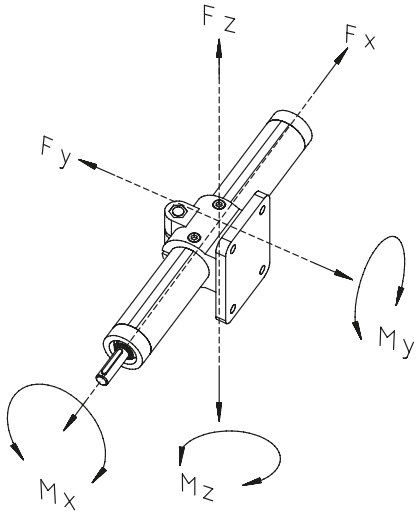


* with reference to carriage (static, resting on end elements)

| Type | Fx | Fy | | | | Fz | | | | Mx | My | Mz |
|---|---|---|---|---|---|---|---|---|---|---|---|---|
| Total length [mm] | | 300 | 500 | 800 | 1000 | 300 | 500 | 800 | 1000 | | | |
| Deflection [mm] | | 1.0 | 2.5 | 4.0 | 5.0 | 1.0 | 2.5 | 4.0 | 5.0 | | | |
| Force | 300 | 700 | 550 | 270 | 140 | 1390 | 1210 | 600 | 450 | 2.5 | 5.5 | 5.5 |

## Geometric moment of inertia

[$cm^4$]

| Type | Iy | Iz |
|---|---|---|
| RK LightUnit | 1.90 | 1.88 |

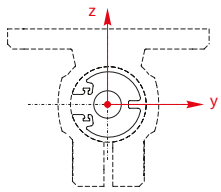

**Order information:**

- Choice of carriage - this must be ordered separately
- Standard lengths in stock! Take advantage of our fast delivery times.

**Version**

- Standard lengths
- Righthand thread

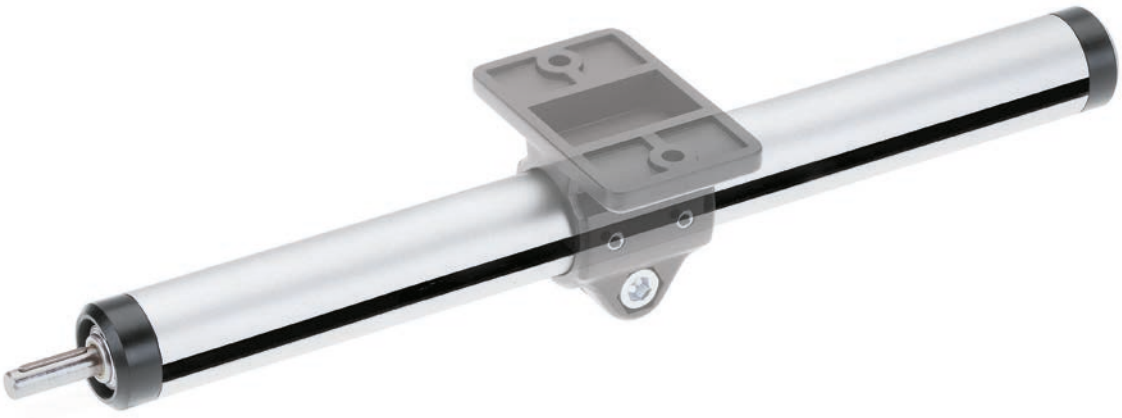

Standard lengths
48 h
ready for delivery

## Standard lengths

- Guiding tube clear anodised: Total length 300, 500, 800 or 1000 mm
- Guiding tube black anodised: Total length 300 mm
- Righthand thread screw with a drive shaft

[mm]

| Code No. | Type | Screw | Travel | Total length | Mass [kg] |
|---|---|---|---|---|---|
| TFA 3000 T_0300 | 30 | 14 x 3 | 220 | 300 | 0.31 |
| TFA 3000 TA0500 | 30 | 14 x 3 | 420 | 500 | 0.51 |
| TFA 3000 TA0800 | 30 | 14 x 3 | 720 | 800 | 0.81 |
| TFA 3000 TA1000 | 30 | 14 x 3 | 920 | 1000 | 1.01 |

**Guiding tube**
A = clear anodised
C = black anodised

**Version**

- Variable lengths
- Right or lefthand thread

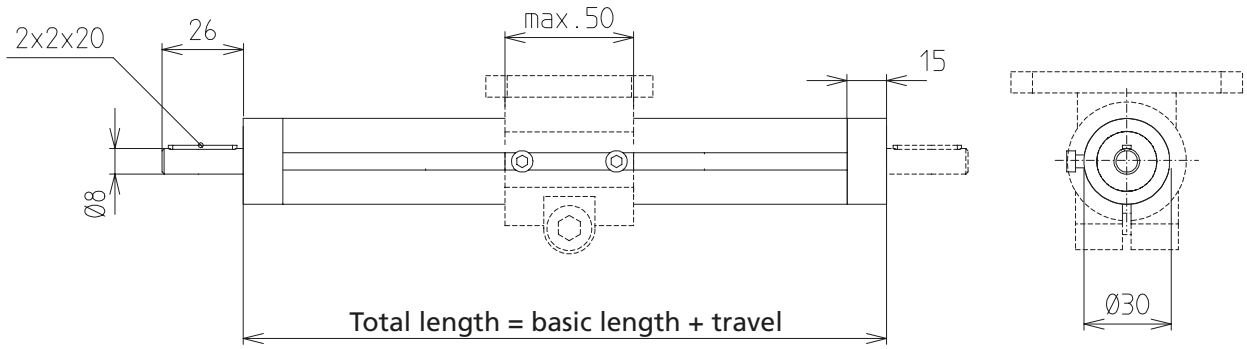


## Variable lengths

[mm]

| Code No. | Type | Screw | Basic length | Max. travel | Mass [kg] | |
|---|---|---|---|---|---|---|
| | | | | | Basic length | per 100 mm travel |
| TF_ 3000 _ _ | 30 | 14 x 3 | 80 | 920 | 0.097 | 0.099 |

_ _ _ _ Total length = basic length + travel [mm]

**Guiding tube**
A = clear anodised
C = black anodised

**Shafts:**
T = 1 shaft
U = 2 shafts

**Screw:**
A = righthand thread
H = lefthand thread

**Order information:**

- Choice of carriage - this must be ordered separately
- Please specify total travel when placing an order

**Version** ■ **Right *and* lefthand thread**

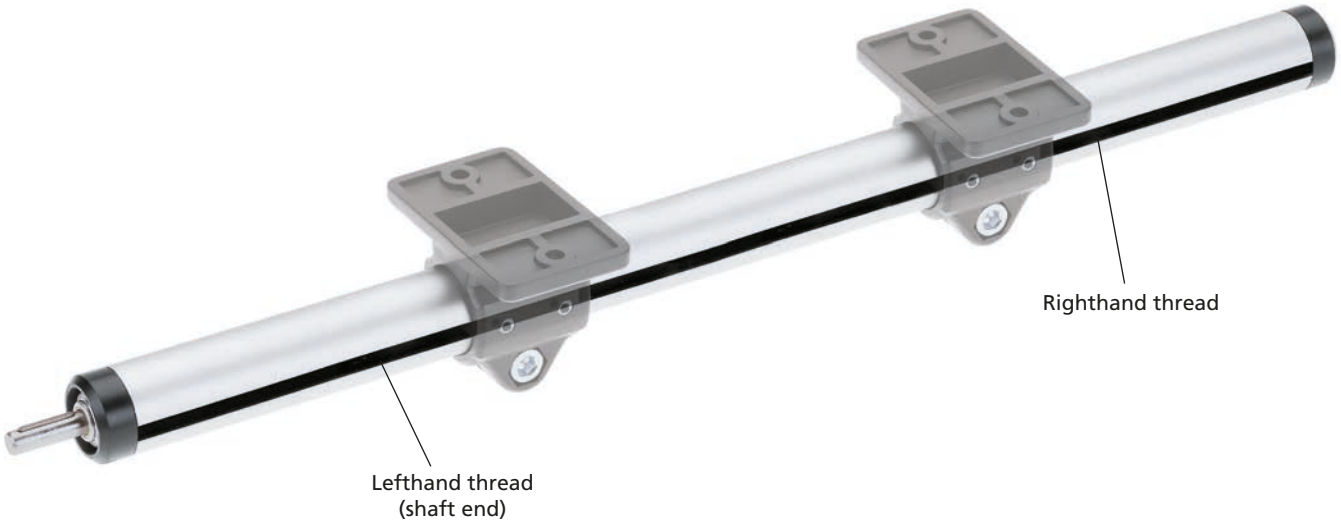


[mm]

| Code No. | Type | Screw | Basic length | Max. travel | Mass [kg] | |
|---|---|---|---|---|---|---|
| | | | | | Basic length | per 100 mm travel |
| TFC 3000 _ _ _ _ _ | 30 | 14 x 3 | 130 | 870 | 0.113 | 0.099 |

_ _ _ _ Total length = basic length + total travel [mm]

**Guiding tube**
A = clear anodised
C = black anodised

**Screw:**
S = 1 shaft on the lefthand thread side
T = 1 shaft on the righthand thread side
U = 2 shafts

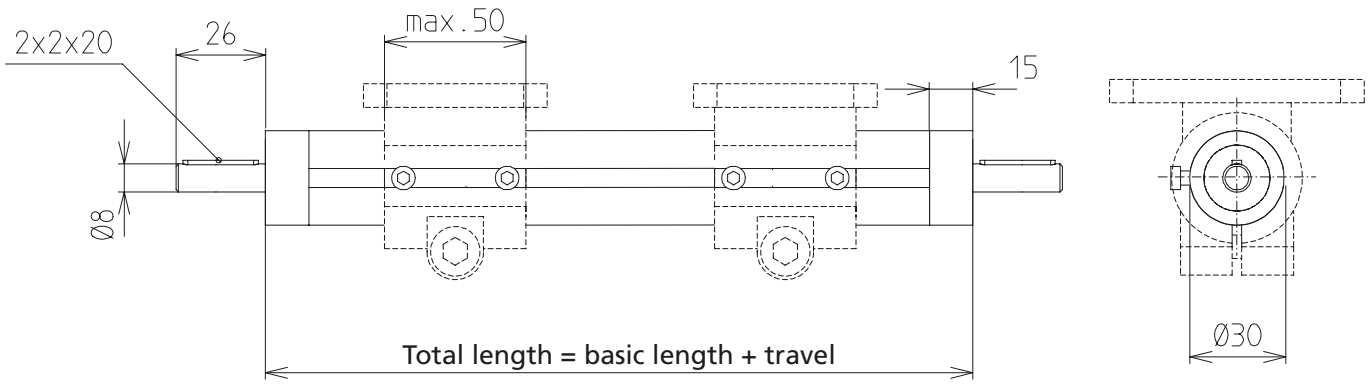
2x2x20
26
max. 50
15
Ø8
Total length = basic length + travel
Ø30

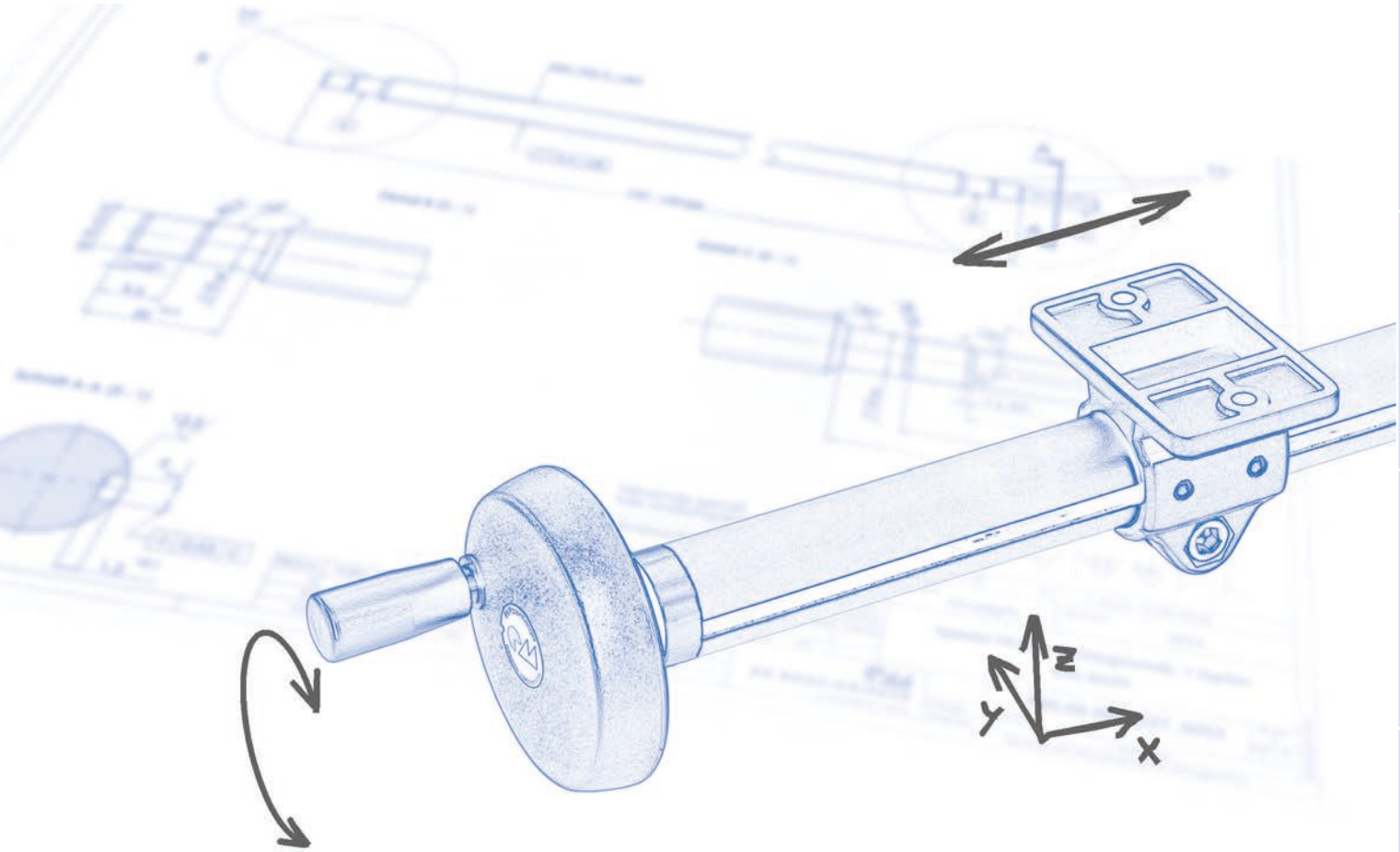
Z
Y
X

**Order information:**

- The carriages are fitted with screws as standard. These can be replaced with clamping levers if required.
  For clamping lever, please see page 41.
- Screws in stainless steel on inquiry
- Suitable reducing bushes on page 40

## Carriage

- A wide range of models facilitate mounting

**Material:** Reinforced polyamide, black; fastenings galvanised or stainless steel

### K-KU

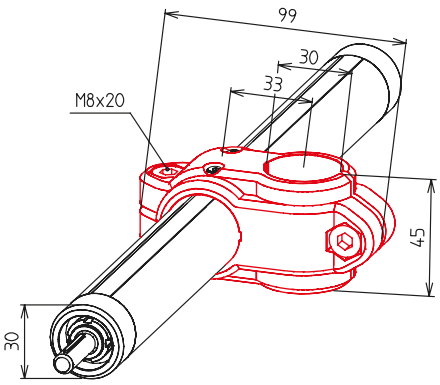


[mm]

| Code No. | Type |
|---|---|
| 13001200CSR30 | K-KU 30 |

### FK-KU

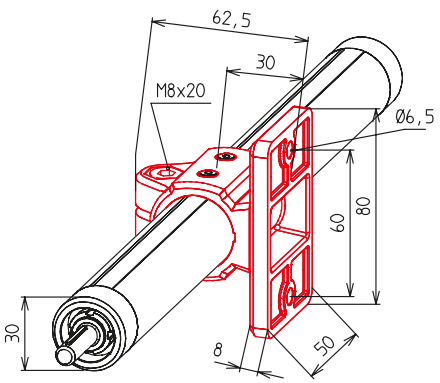


[mm]

| Code No. | Type |
|---|---|
| 13009200CS | FK-KU 30 |

## W-KU

[mm]

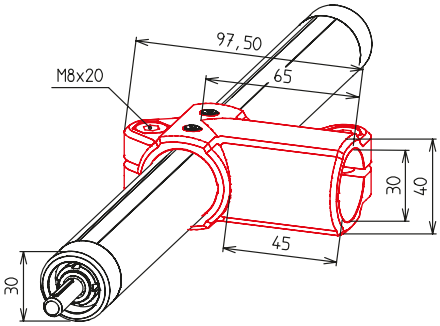


| Code No. | Type |
|---|---|
| 13007200CSR30 | W-KU 30 |

## FS-KU

[mm]

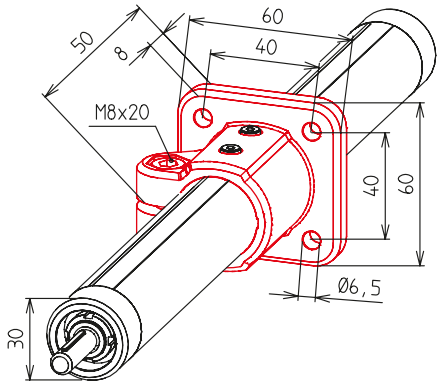


| Code No. | Type |
|---|---|
| 13011200CS | FS-KU 30 |

## LW-KU

[mm]

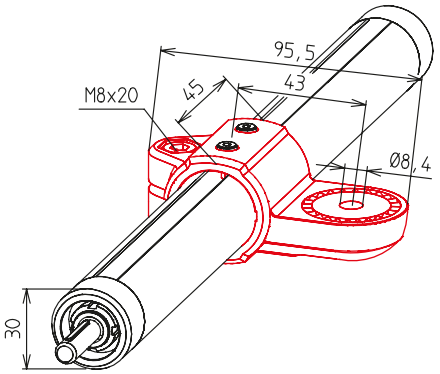


| Code No. | Type |
|---|---|
| 13014200CS | LW-KU 30 |

## GW-KU

[mm]

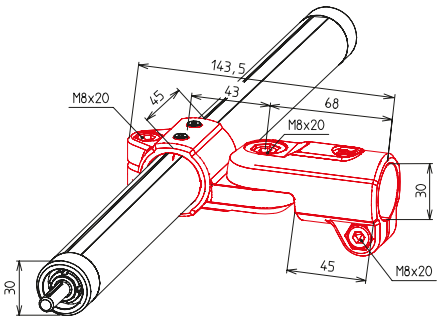


| Code No. | Type |
|---|---|
| 13016200CSR30 | GW-KU 30 |

**Order information:**

- The carriages are fitted with screws as standard. These can be replaced with clamping levers if required.
  For clamping lever, please see page 41.
- **Purchase only in lot sizes and a multiple of that, see product table below**

## Fixing elements

- A special reducing bush system enables connection to a range of tube diameters
- A wide range of models facilitate mounting

**Material:** Reinforced polyamide, black; fastenings galvanised or stainless steel

## K-KU

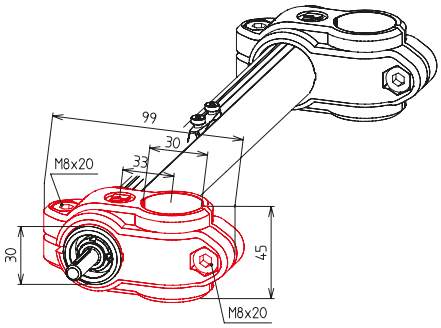


[mm]

| Code No. | Type | lot sizes |
|---|---|---|
| K00030BCSR30R30 | K-KU 30 | 5, 10, 15... pcs |

## FK-KU

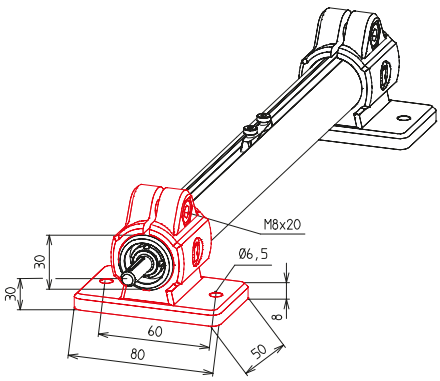


[mm]

| Code No. | Type | lot sizes |
|---|---|---|
| K20030BCSR30 | FK-KU 30 | 5, 10, 15... pcs |

## Fixing elements

### W-KU

[mm]

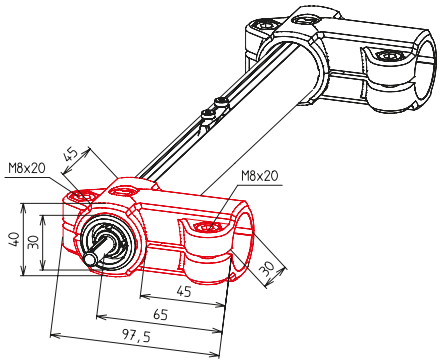


| Code No. | Type | lot sizes |
|---|---|---|
| K10030BCSR30R30 | W-KU 30 | 5, 10, 15... pcs |

### FS-KU

[mm]

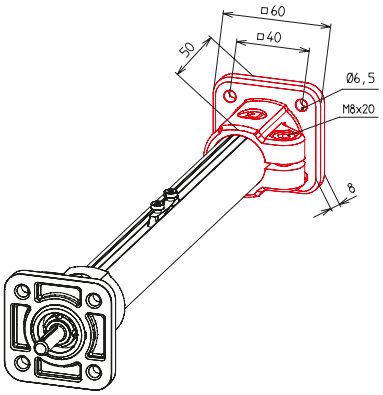


| Code No. | Type | lot sizes |
|---|---|---|
| K30030BCSR30 | FS-KU 30 | 5, 10, 15... pcs |

### GF-KU

[mm]

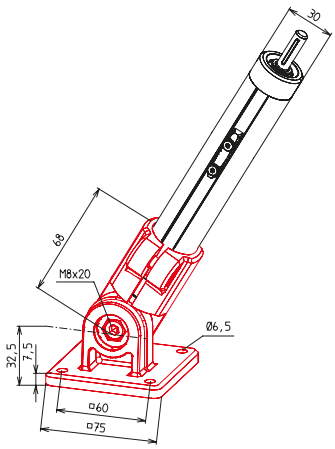


| Code No. | Type | lot sizes |
|---|---|---|
| K80230BCSR30 | GF-KU 30 | 5, 10, 15... pcs |

## Reducing bushes



- Simply replace the reducing bush to modify the tube diameter on carriages or fixing elements
- In the case of fixing elements, the reducing bushes are included in the scope of delivery when entering the order number and do not need to be ordered separately

**Material:** PA6.6 GF30

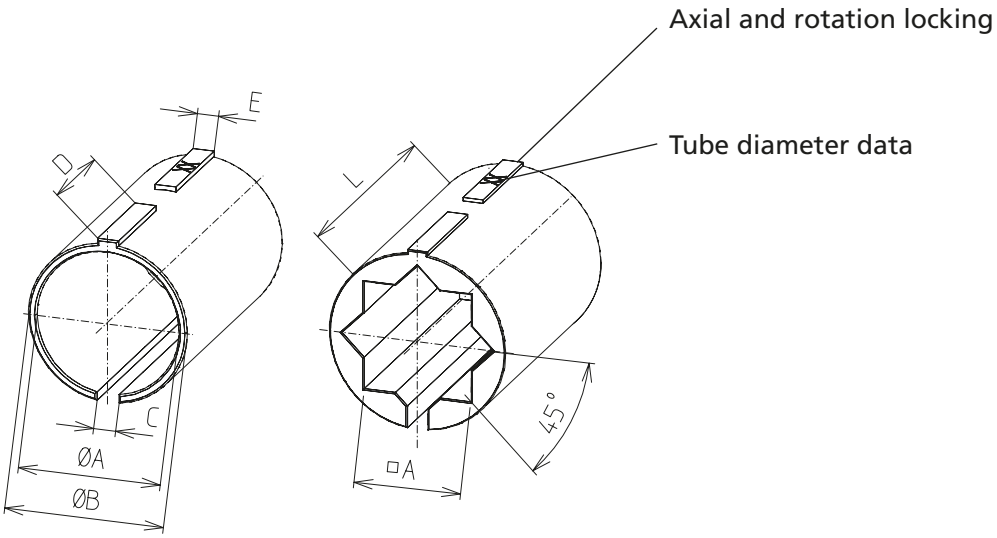


Version “R” Version “V”

[mm]

| Code No. | Type | Version | lot sizes | A+0,1 | B | C | D | E | L |
|---|---|---|---|---|---|---|---|---|---|
| 96204BC | 30 | R20 | 5, 10, 15... pcs | 20,25 | 30 | 3,5 | 18,9 | 3,4 | 45 |
| 96206BC | 30 | R25 | 5, 10, 15... pcs | 25,25 | 30 | 3,5 | 18,9 | 3,4 | 45 |
| 96208BC | 30 | V20 | 5, 10, 15... pcs | 20,25 | 30 | 3,5 | 18,9 | 3,4 | 45 |

## Clamping lever

- For the equipping of fixing elements and carriages

**Material:** Handle made of PA, black



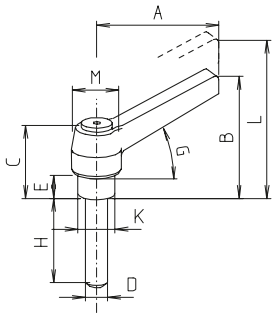


[mm]

| Code No. | Type | Screw | A | B | C | D | E | G | H | K | L | M |
|---|---|---|---|---|---|---|---|---|---|---|---|---|
| 902381 | 30 | steel | 65 | 48.5 | 36.5 | M8 | 14 | 20° | 25 | 13 | 52.5 | 18 |

## Handwheel

- Rotating cylindrical grip
- Fully turned wheel rim
- Machined hub

**Material:** Aluminium die cast, black powder-coated



Ø 80

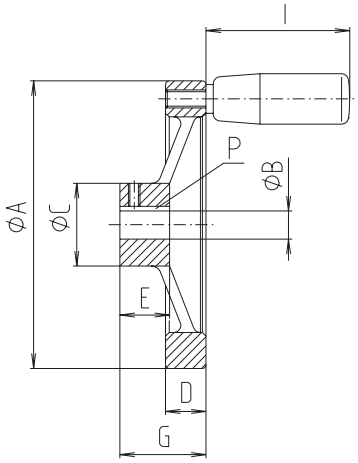


[mm]

| Code No. | Type | A | B | C | D | E | G | P | I |
|---|---|---|---|---|---|---|---|---|---|
| 90903 | 30 | 80 | 8 | 23 | 11 | 17 | 35 | 2 x 2 | 42 |

## Positioning indicator

- max. ambient temperature +80°C
- Figure height 6 mm
- Indicating accuracy ± 0.1 mm

**Material:** Housing polyamide 6
Orange RAL 2004,
Steel parts, corrosion protected

**Scope of delivery:** Positioning indicator, clamping ring, shaft extension and fastenings

**Note:** "rising" and "falling" versions refer to the clockwise rotation of the drive shaft.



Installation position: horizontal

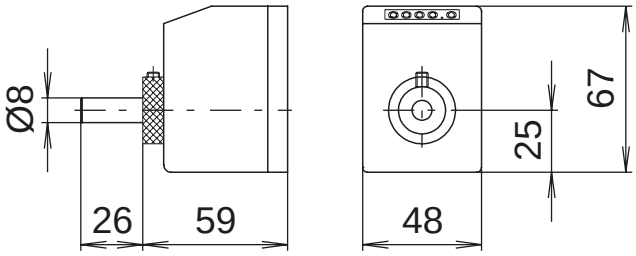




Installation position: vertical

| Code No. | Installation position | Version* |
|---|---|---|
| 91043 | Horizontal | 3 mm rising |
| 91053 | | 3 mm falling |
| 91063 | Vertical | 3 mm rising |
| 91073 | | 3 mm falling |
| 91010 | Horizontal | 6 mm rising |
| 91029 | | 6 mm falling |
| 91020 | Vertical | 6 mm rising |
| 91019 | | 6 mm falling |

* Version with double lead e.g. for installation on righthand/lefthand thread screws

# Single tube actuator – E linear unit

## Flexible all-rounder – with an unrivalled price-performance ratio

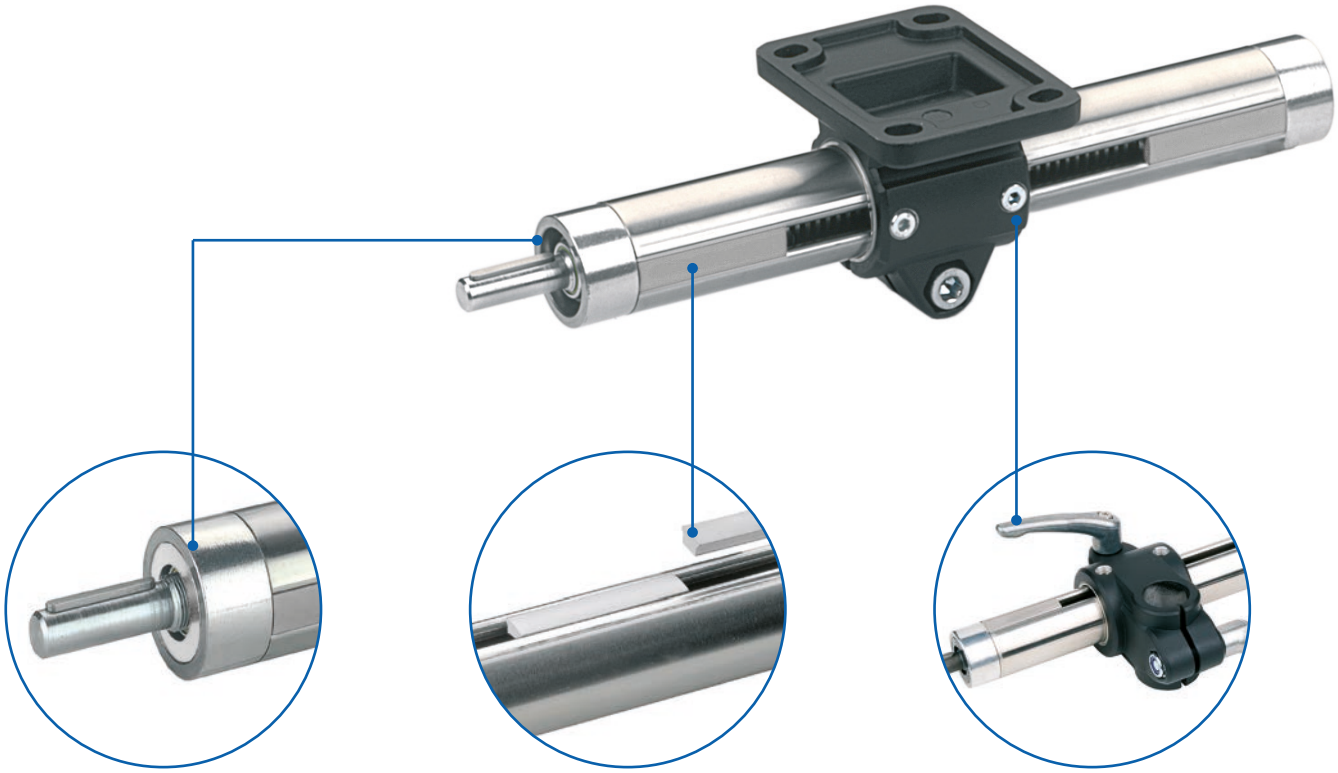

### Bearing cover
- ✓ Dust/spray protection on Type 30-60
- ✓ Option of screw with slide bearing (resistant to fine dust/abrasions)

### Covers
- ✓ Slot cover, as dust protection or stroke limitation

### Carriages/fixing elements
- ✓ Wide range of models facilitates connection to your designs
- ✓ Option of carriage with slide bushing (lower input torque, wear minimized)

**48 h**
**ready for delivery**

### Features:
- Units for light to heavy moving applications
- Manual and motor-driven adjustments supported
- Different sizes can be combined
- Comprehensive range of accessories

### Options:
- Corrosion-protected units
- Second free-running carriage

# E linear unit - Table of contents


## Properties/Technnical data

- General information/operating conditions ..... 46
- Load data ..... 47
- No-load torques ..... 46

## Versions
(Dimensions, order numbers)

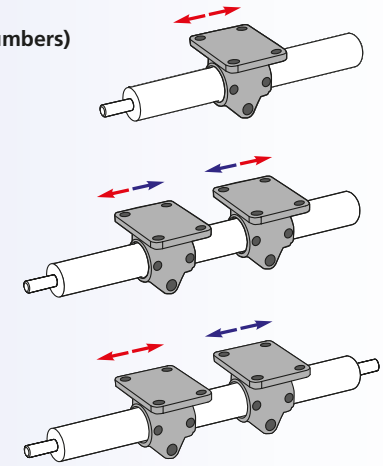

- Right *or* lefthand thread ..... 48 - 49
- Right *and* lefthand thread ..... 50 - 51
- *Split* screw ..... 52 - 53

## Accessories

**Fixing**

- Carriage ..... 54 - 59
- Fixing elements ..... 60 - 63
- Covers for E-II ..... 64
- Clamping lever ..... 65

**Drive**

- Handwheel ..... 66
- Chain wheel ..... 67
- Timing-belt pulley ..... 67
- Angular drive ..... 68
- Transmission unit ..... 68
- Bevel gear set ..... 69
- Motor adaptor/coupling ..... 70

**Position determination**

- Scale/positioning indicator ..... 72 - 73
- Limit switches ..... 74

# E linear units – Technical data

## General information/operating conditions

| | |
|---|---|
| Design | Actuator with ACME screw in a slotted tube |
| Guide | Slide guide, optional carriage with slide guide available |
| Installation position | Any position |
| Positioning accuracy | ± 0.2 mm/300 mm stroke |
| Self-locking | Yes |
| Ambient temperature | 0°C to + 60°C |

## Screw lead

| Type | Screw lead [mm] | Speed with slide bearing 80 rpm [mm/s] | Speed with ball bearing 250 rpm [mm/s] |
|---|---|---|---|
| E 18 | 2 | 2,7 | 8,3 |
| E-II 30 | 3 | 4 | 12,5 |
| E-II 40 | 4 | 5,3 | 16,7 |
| E-II 50 | 4 | 5,3 | 16,7 |
| E-II 60 | 5 | 6,7 | 20,8 |
| E 80 | 6 | 8 | 25 |

$$\text{Required screw speed* n [rpm]} = \frac{\text{speed [m/min] x 1000}}{\text{screw lead [mm]}}$$

Max. screw speed with slide bearing 80 rpm
with ball bearing 250 rpm

## No-load torque

[Nm]

| Type | Screw with slide bearing | Screw with ball bearing |
|---|---|---|
| E 18 | – | 0.20 |
| E-II 30 | 0.45 | 0.35 |
| E-II 40 | 0.65 | 0.50 |
| E-II 50 | 1.20 | 0.90 |
| E-II 60 | – | 1.10 |
| E 80 | – | 0.90 |

## Load data*

F Force [N]

M Moment [Nm]

I Geometric moment of inertia [$cm^4$]

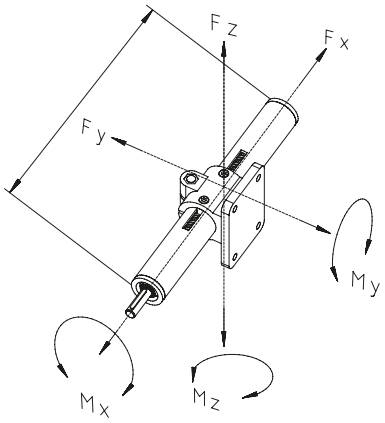


* with reference to carriage (deflection of guide element f = 0.5 mm, static, end elements supported)

| | Fx | Fy | | | Fz | | | Mx | My | Mz |
|---|---|---|---|---|---|---|---|---|---|---|
| Total length [mm] | 500 | 500 | 1000 | 1500 | 500 | 1000 | 1500 | | | |
| Type | | | | | | | | | | |
| E 18 | 400 | 90 | 10 | – | 60 | 8 | – | 1.5 | 4 | 4 |
| E-II 30 | 800 | 500 | 60 | 10 | 500 | 50 | 9 | 6 | 15 | 15 |
| E-II 40 | 1000 | 2100 | 250 | 60 | 1900 | 140 | 50 | 14 | 40 | 40 |
| E-II 50 | 1700 | 3000 | 600 | 140 | 3000 | 600 | 140 | 30 | 65 | 65 |
| E-II 60 | 2500 | 4500 | 1500 | 380 | 4500 | 1300 | 320 | 45 | 120 | 120 |
| E 80 | 4500 | 5500 | 2300 | 550 | 5650 | 2500 | 650 | 70 | 170 | 170 |

**Note:**
Linear units that support higher torques available on request!

## Geometric moment of inertia

[$cm^4$]

| Type | Iy | Iz |
|---|---|---|
| E 18 | 0.22 | 0.27 |
| E-II 30 | 1.34 | 1.56 |
| E-II 40 | 4.58 | 5.24 |
| E-II 50 | 11.31 | 12.32 |
| E-II 60 | 23.11 | 24.98 |
| E 80 | 98.72 | 118.53 |

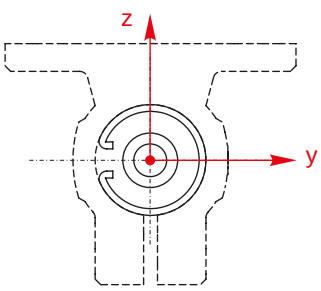

# E linear units – Versions

**Order information:**

- Choice of carriage - this must be ordered separately
- Different "R" dimensions available on request
- Corrosion-protected units available on request

**Version** ■ **Right *or* lefthand thread**

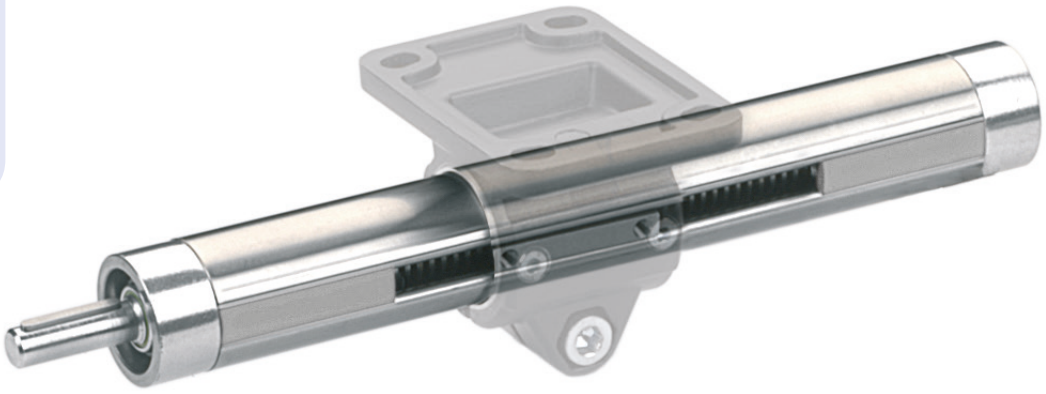

Type 30-60
**48 h**
**ready for delivery**

| Code No. | Type | Screw | Basic length | B | D 1 | D 2 | J |
|---|---|---|---|---|---|---|---|
| 70 _ 181 1 | 18 | Tr 10x2 | 134 | 18 | 6 | – | 24 |
| 70 _ 183 1 | 18 | | | | | 6 | |
| 78 _ 301 _ | 30 | Tr 14x3 | 198 | 30 | 8 | – | 38 |
| 78 _ 303 _ | 30 | | | | | 8 | |
| 78 _ 401 _ | 40 | Tr 20x4 | 209 | 40 | 12 | – | 55 |
| 78 _ 403 _ | 40 | | | | | 12 | |
| 78 _ 501 _ | 50 | Tr 20x4 | 230 | 50 | 12 | – | 60 |
| 78 _ 503 _ | 50 | | | | | 12 | |
| 78 _ 601 1 | 60 | Tr 24x5 | 275 | 60 | 14 | – | 75 |
| 78 _ 603 1 | 60 | | | | | 14 | |
| 70 _ 801 1 | 80 | Tr 32x6 | 300 | 80 | 20 | – | 100 |
| 70 _ 803 1 | 80 | | | | | 20 | |

_ _ _ _ Total length = basic length + travel [mm]

**Screw bearing:**
0 = screw with slide bearing

1 = screw with ball bearing

**Version:**
1 = righthand thread

2 = lefthand thread

A = righthand thread with scale at 270° *

B = righthand thread with scale at 270° *

C = lefthand thread with scale at 270° *

D = lefthand thread with scale at 270° *

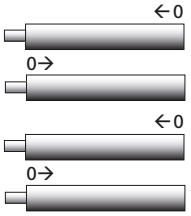


*Scale only for Type 30-60. Details see page 72

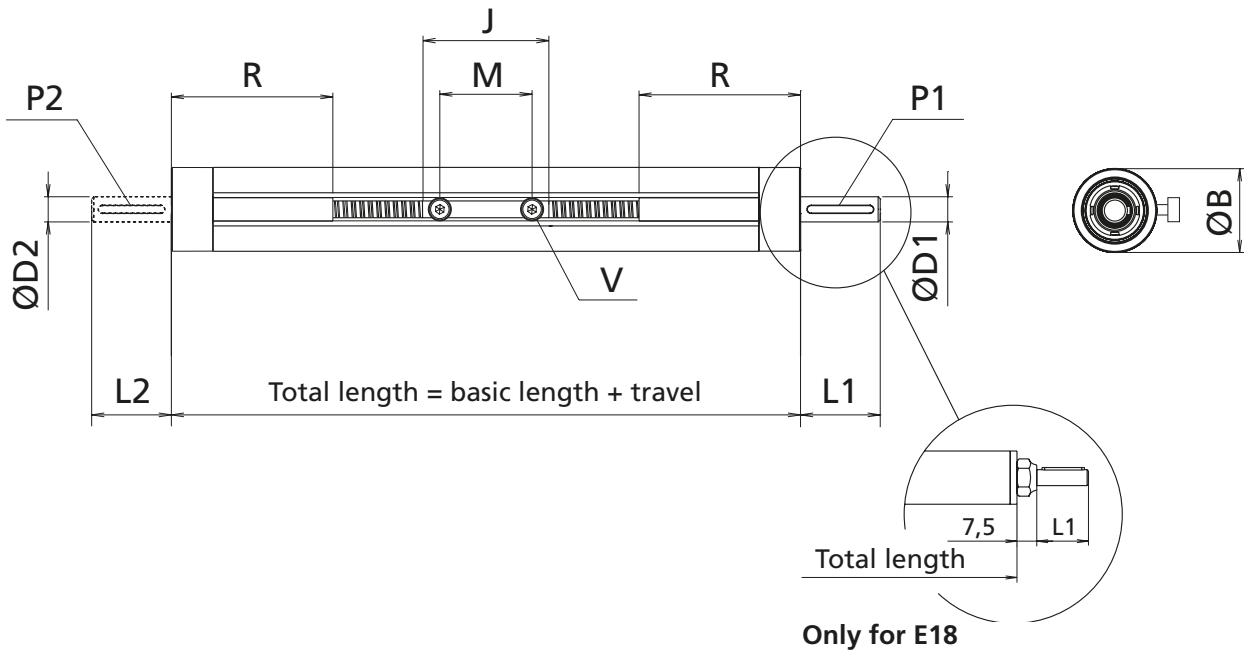


**Only for E18**

[mm]

| L 1 | L 2 | M | P 1 | P 2 | R | V | Max. travel | Mass [kg] | |
|---|---|---|---|---|---|---|---|---|---|
| | | | | | | | | Basic length | per 100 mm travel |
| 17 | – | 18 | 2 x 2 x 12 | – | 55* | M3 x 5 | 1049 | 0.225 | 0.097 |
| | 17 | | | 2 x 2 x 12 | | | 1032 | 0.229 | 0.097 |
| 26 | – | 28 | 2 x 2 x 20 | – | 80 | M4 x 8 | 1376 | 0.610 | 0.212 |
| | 26 | | | 2 x 2 x 20 | | | 1350 | 0.620 | 0.212 |
| 38 | – | 44 | 4 x 4 x 32 | – | 77 | M6 x 10 | 2831 | 1.305 | 0.432 |
| | 38 | | | 4 x 4 x 32 | | | 2831 | 1.336 | 0.432 |
| 38 | – | 44 | 4 x 4 x 32 | – | 85 | M6 x 10 | 2820 | 1.955 | 0.539 |
| | 38 | | | 4 x 4 x 32 | | | 2820 | 1.990 | 0.539 |
| 38 | – | 50 | 5 x 5 x 32 | – | 100 | M8 x 12 | 2777 | 3.211 | 0.764 |
| | 38 | | | 5 x 5 x 32 | | | 2777 | 3.257 | 0.764 |
| 31.5 | – | 70 | 6 x 6 x 22 | – | 100 | M8 x 25 | 2416 | 10.00 | 1.940 |
| | 31.5 | | | 6 x 6 x 22 | | | 2416 | 10.10 | 1.940 |

* For total lengths < 300 mm, dimension R = 25 mm

# E linear units – Versions

**Order information:**

- Choice of carriage - this must be ordered separately
- Please specify total travel when placing an order
- Different “R” dimensions available on request
- Corrosion-protected units available on request

**Version ■ Right *and* lefthand thread**




Type 30-60

**48 h**
**ready for delivery**

| Code No. | Type | Screw | Basic length | B | D1 | D2 | J |
|---|---|---|---|---|---|---|---|
| 70318_1 | 18 | TR 10x2 | 195 | 18 | 6 | 6 | 24 |
| 78_30_ _ | 30 | TR 14x3 | 261 | 30 | 8 | 8 | 38 |
| 78_40_ _ | 40 | TR 20x4 | 287 | 40 | 12 | 12 | 55 |
| 78_50_ _ | 50 | TR 20x4 | 319 | 50 | 12 | 12 | 60 |
| 78_60_ 1 | 60 | TR 24x5 | 379 | 60 | 14 | 14 | 75 |
| 70380_1 | 80 | TR 32x6 | 465 | 80 | 20 | 20 | 100 |

_ _ _ _ Total length = basic length + total travel [mm]

**Screw bearing:**
0 = screw with slide bearing
1 = screw with ball bearing

**Version:**
1 = 1 drive shaft at lefthand thread end
2 = 1 drive shaft at righthand thread end
3 = 2 drive shafts

**Version:**
3 = Right and lefthand thread (RH/LH)
N = RH/LH with scale at 270° *




*Scale only for Type 30-60. Details see page 72

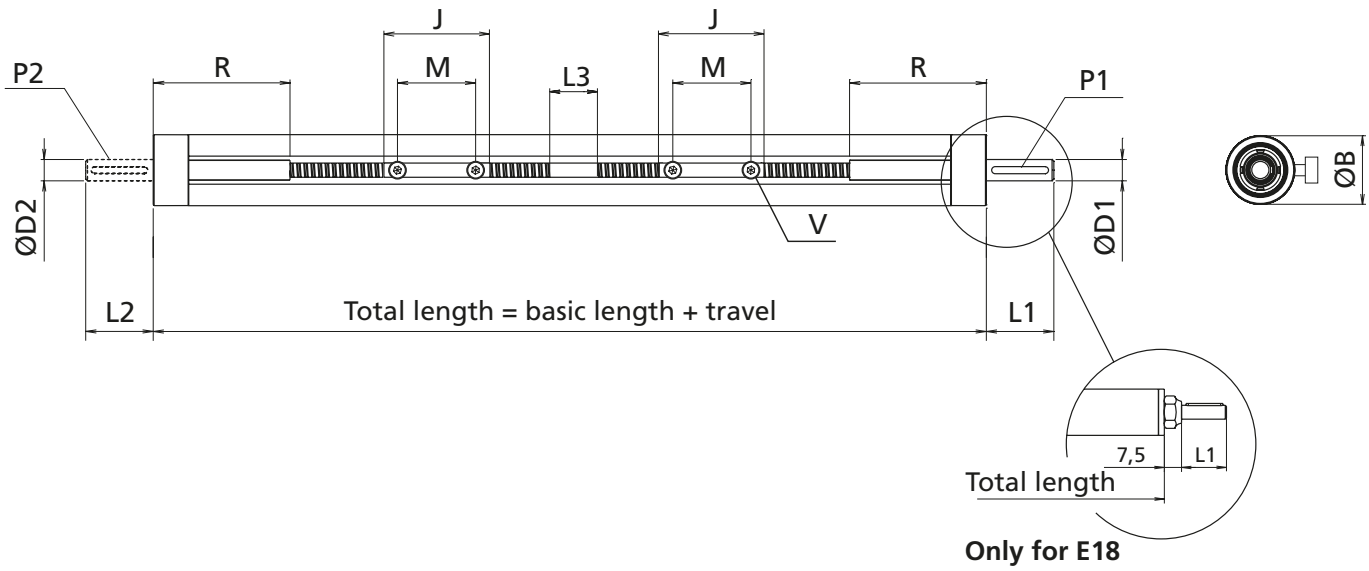


[mm]

| L 1 | L 2 | L 3 | M | P 1 | P 2 | R | V | Max. travel | Mass [kg] | |
|---|---|---|---|---|---|---|---|---|---|---|
| | | | | | | | | | Basic length | per 100 mm travel |
| 17 | 17 | 37** | 18 | 2 x 2 x 12 | 2 x 2 x 12 | 55* | M3 x 5 | 1325 | 0.330 | 0.097 |
| 26 | 26 | 25 | 28 | 2 x 2 x 20 | 2 x 2 x 20 | 80 | M4 x 8 | 1739 | 0.798 | 0.212 |
| 38 | 38 | 23 | 44 | 4 x 4 x 32 | 4 x 4 x 32 | 77 | M6 x 10 | 2713 | 1.742 | 0.432 |
| 38 | 38 | 29 | 44 | 4 x 4 x 32 | 4 x 4 x 32 | 85 | M6 x 10 | 2681 | 2.725 | 0.539 |
| 38 | 38 | 29 | 50 | 5 x 5 x 32 | 5 x 5 x 32 | 100 | M8 x 12 | 2621 | 4.306 | 0.764 |
| 31.5 | 31.5 | 65** | 70 | 6 x 6 x 22 | 6 x 6 x 22 | 100 | M8 x 25 | 2251 | 13.290 | 1.940 |

* For total lengths < 300 mm, dimension R = 25 mm
** From a total length of 1000 mm

# E linear units – Versions

**Order information:**

- Choice of carriage - this must be ordered separately
- Please specify total travel when placing an order
- Different “R” dimensions available on request
- Corrosion protected units available on request

**Version ■ *Split* screw**




Type 30-60

**48 h**
**ready for delivery**

| Code No. | Type | Screw | Basic length | B | D1 | D2 | J |
|---|---|---|---|---|---|---|---|
| 78_3031 | 30 | TR 14x3 | 280 | 30 | 8 | 8 | 38 |
| 78_4031 | 40 | TR 20x4 | 308 | 40 | 12 | 12 | 55 |
| 78_5031 | 50 | TR 20x4 | 334 | 50 | 12 | 12 | 60 |
| 78_6031 | 60 | TR 24x5 | 394 | 60 | 14 | 14 | 75 |
| 7048031 | 80 | TR 32x6 | 450 | 80 | 20 | 20 | 100 |

_ _ _ _ Total length = basic length + total travel [mm]

**Version:**
4 = Split screw
U = Split screw with scale at 270° *




*Scale only for Type 30-60. Details see page 72

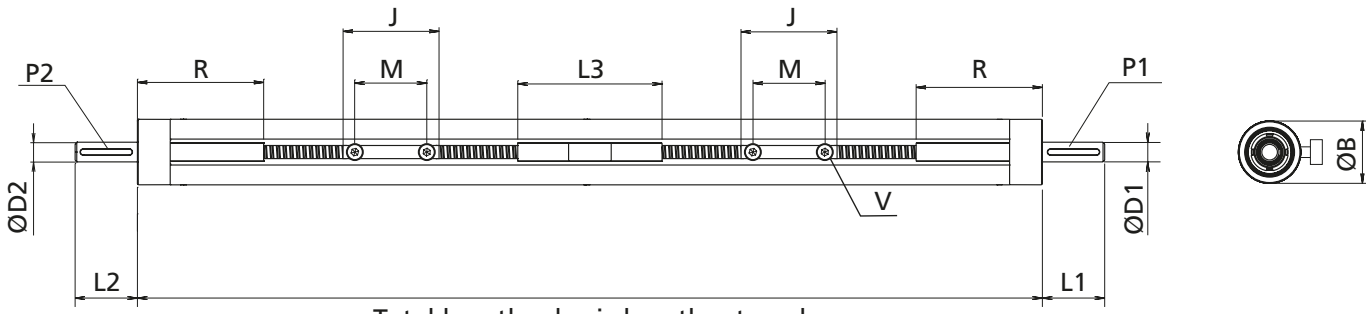


Total length = basic length + travel

[mm]

| L 1 | L 2 | L 3 | M | P 1 | P 2 | R | V | Max. travel/end | Mass [kg] | |
|---|---|---|---|---|---|---|---|---|---|---|
| | | | | | | | | | Basic length | per 100 mm travel |
| 26 | 26 | 44 | 28 | 2 x 2 x 20 | 2 x 2 x 20 | 80* | M4 x 8 | 1377 | 0.673 | 0.212 |
| 38 | 38 | 44 | 44 | 4 x 4 x 32 | 4 x 4 x 32 | 77 | M6 x 10 | 1366 | 2.317 | 0.432 |
| 38 | 38 | 44 | 44 | 4 x 4 x 32 | 4 x 4 x 32 | 85 | M6 x 10 | 1358 | 3.169 | 0.539 |
| 38 | 38 | 44 | 50 | 5 x 5 x 32 | 5 x 5 x 32 | 100 | M8 x 12 | 1329 | 3.571 | 0.764 |
| 31.5 | 31.5 | 50 | 70 | 6 x 6 x 22 | 6 x 6 x 22 | 100 | M8 x 25 | 1133 | 15.970 | 1.940 |

* For total lengths < 300 mm, dimension R = 53 mm

**Order instructions:**

- Coloured powder-coating available on request.
- A rotation locking device (drive key) is included in the scope of delivery of the linear unit. Additional drive keys (e.g. for free-running carriages) can also be ordered as an optional extra
- Clamping levers have to be ordered separately. Delivery unassembled. See table last column and page 65
- For further dimensions, please refer to the catalogue "Connecting Technology"

## Carriages

- A range of different versions facilitate mounting

**Scope of delivery:**
Carriages with screws, losely enclosed

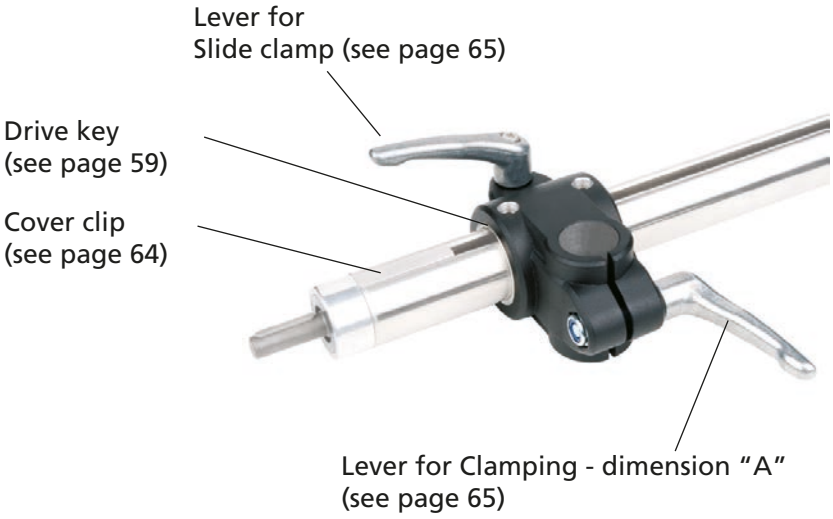


## K*

[mm]

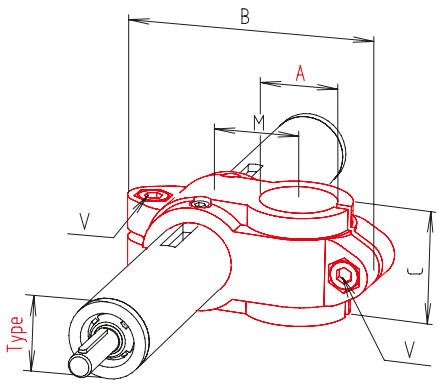


| Code No. | Type | A | B | C | M | Clamping levers V Code No. VA |
|---|---|---|---|---|---|---|
| 11801_ 00 | 18 | 18 | 66 | 25.5 | 20 | 90209 |
| 13093_ 0_ | 30 | 20 | 99 | 40 | 33 | 9022201 |
| 12501_ 0_ | 30 | 25 | 99 | 40 | 33 | 9022201 |
| 13001_ 0_ | 30 | 30 | 99 | 40 | 33 | 9022201 |
| 14001_ 0_ | 40 | 40 | 137 | 60 | 45 | 90250 |
| 15003_ 0_ | 50 | 40 | 154 | 70 | 53 | 90251 |
| 15001_ 0_ | 50 | 50 | 154 | 70 | 53 | 90251 |
| 16001_ 0_ | 60 | 60 | 190 | 80 | 65 | 9025301 |
| 18001_ 00 | 80 | 80 | 255 | 120 | 90 | 9027001 |

0 = without scale
A = scale at 270°

0 = without slide bushing
1 = with slide bushing

* The external diameters of fixing plates are the same while the internal diameters of fixing holes may vary. Please also refer to KD range.

## Carriages

### KD*

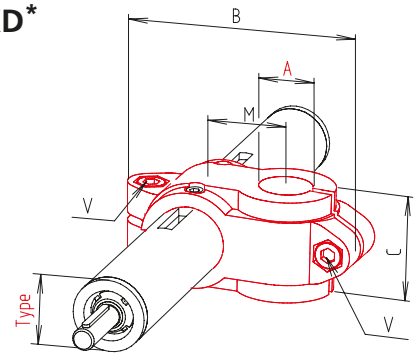


[mm]

| Code No. | Type | A | B | C | M | V1 | V2 |
|---|---|---|---|---|---|---|---|
| | | | | | | Clamping levers Code No. | |
| 11803_ 00 | 18 | 30 | 84 | 40 | 27 | 90209 | 9022201 |
| 13003_ 0_ | 30 | 14 | 84 | 33 | 27 | 9022201 | 90209 |
| 13004_ 0_ | 30 | 40 | 137.5 | 65 | 45 | 90251 | |
| 14003_ 0_ | 40 | 20 | 110 | 50 | 36 | 90250 | 9022201 |
| 14004_ 0_ | 40 | 30 | 137.5 | 65 | 45 | 90251 | |
| 15004_ 0_ | 50 | 30 | 137.5 | 65 | 45 | 90251 | |
| 16004_ 00 | 60 | 50 | 180 | 80 | 60 | 9025301 | 9025501 |

* Different external diameters of the fixing plates and different internal diameters of fixing holes. Please also refer to K range.

### KR

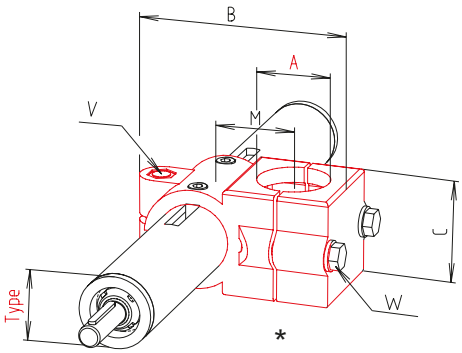


[mm]

| Code No. | Type | A | B | C | M | V | W |
|---|---|---|---|---|---|---|---|
| | | | | | | Clamping levers Code No. | |
| 13005_ 0_ | 30 | 30 | 86 | 45 | 33 | 9022401 | |
| 14005_ 0_ | 40 | 40 | 117 | 60 | 47 | 9024301 | 9022501 |
| 25005_ 0_ | 50 | 50 | 126 | 86 | 53 | 9022601 | |

### KVR

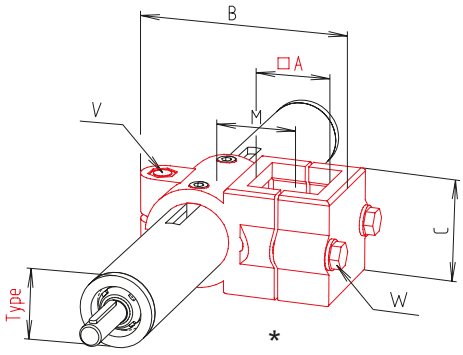


[mm]

| Code No. | Type | A | B | C | M | V | W |
|---|---|---|---|---|---|---|---|
| | | | | | | Clamping levers Code No. | |
| 13006_ 0_ | 30 | 30 | 86 | 45 | 33 | 9022401 | |
| 14006_ 0_ | 40 | 40 | 117 | 60 | 47 | 9024301 | 9022501 |
| 25006_ 0_ | 50 | 50 | 126 | 86 | 53 | 9022601 | |

0 = without scale
A = scale at 270°

0 = without slide bushing
1 = with slide bushing

* Type 50 (image similar)

## Carriages

### W

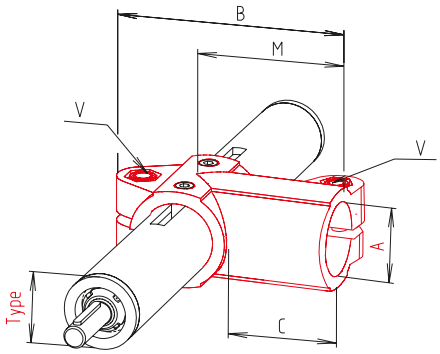


[mm]

| Code No. | Type | A | B | C | M | Clamping levers V Code No. |
|---|---|---|---|---|---|---|
| 11807_ 00 | 18 | 18 | 66 | 30 | 43 | 90209 |
| 13007_ 0_ | 30 | 30 | 93 | 40 | 60 | 9022201 |
| 14007_ 0_ | 40 | 40 | 134 | 60 | 88 | 90250 |
| 15007_ 0_ | 50 | 50 | 149 | 65 | 98 | 90251 |
| 16007_ 0_ | 60 | 60 | 183 | 80 | 120 | 9025301 |
| 18007_ 00 | 80 | 80 | 259 | 121.7 | 176.7 | 9027001 |

### FK

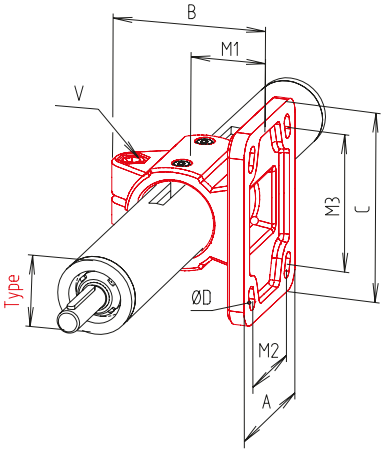


[mm]

| Code No. | Type | A | B | C | D | M1 | M2* | M3* | Clamping levers V Code No. |
|---|---|---|---|---|---|---|---|---|---|
| 11809 _ 00 | 18 | 35 | 41 | 50 | 5.5 | 18 | –** | 40 | 90209 |
| 13009 _ 0_ | 30 | 55 | 63 | 78 | 6.5 | 30 | –** | 53-60 | 9022201 |
| 13023 _ 0_ | 30-4 | 55 | 63 | 78 | 6.5 | 30 | 35-40 | 53.60 | 9022201 |
| 14009 _ 0_ | 40 | 80 | 87 | 105 | 8.5 | 42 | 52-60 | 80-82 | 90250 |
| 15009 _ 0_ | 50 | 90 | 98 | 128 | 10.5 | 50 | 60-62 | 98-100 | 90251 |
| 16009 _ 0_ | 60 | 110 | 123 | 150 | 10.5 | 60 | 74-80 | 100-118 | 9025301 |
| 18009 _ 00 | 80 | 164.7 | 162.4 | 180 | 17.5 | 80 | 120 | 140 | 9027001 |

0 = without scale
A = scale at 270°

0 = without slide bushing
1 = with slide bushing

* Type 30-60 with slot
** Type 18-30 with central holes

If using FK elements as carriages and fixing elements, spacers provide the necessary clearance.

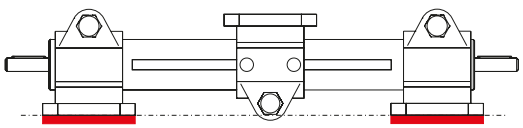

[mm]

| Code No. | Type | Spacer |
|---|---|---|
| 96713 | 30 | 5 mm plate thickness, vibratory finished |
| 96714 | 40 | |
| 96716 | 60 | |

## Carriages

### FS

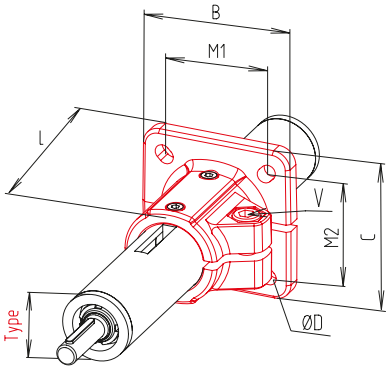


[mm]

| Code No. | Type | B | C | D | L | M1* | M2* | Clamping levers V Code No. |
|---|---|---|---|---|---|---|---|---|
| 11811_00 | 18 | 42 | 42 | 5.5 | 37 | 28-30 | 28-30 | 90209 |
| 13011_0_ | 30 | 60 | 60 | 6.5 | 50 | 40-42 | 42-45 | 9022201 |
| 14011_0_ | 40 | 90 | 90 | 8.5 | 70 | 60-64 | 60-64 | 90250 |
| 15011_0_ | 50 | 105 | 105 | 10.5 | 85 | 74-80 | 74-80 | 90251 |
| 16011_0_ | 60 | 120 | 120 | 10.5 | 100 | 80-89 | 80-89 | 9025301 |
| 18011_00 | 80 | 170 | 174.5 | 17.5 | 141.4 | 120 | 120 | 9027001 |

* Type 30-60 with slot

### PB

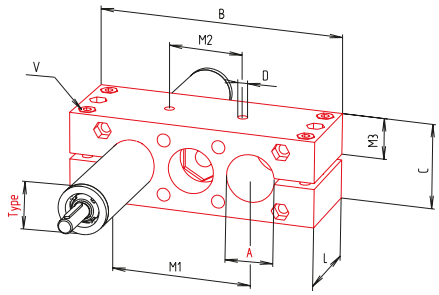


[mm]

| Code No. | Type | A | B | C | D | M1 | M2 | M3 | L | Clamping levers V Code No. |
|---|---|---|---|---|---|---|---|---|---|---|
| 11813_00 | 18 | 18 | 82 | 28 | M 5 | 40 | 18 | 14.5 | 28.5 | 9302501 |
| 23013_0_ | 30 | 30 | 130 | 52 | M 6 | 70 | 42 | 27 | 50 | 9021501 |
| 14013_0_ | 40 | 40 | 180 | 62 | M 8 | 90 | 62 | 32 | 61 | 9022501 |
| 25013_0_ | 50 | 50 | 206 | 72 | M 8 | 100 | 62 | 37 | 72 | 9022801 |
| 26013_0_ | 60 | 60 | 240 | 86.5 | M10 | 130 | 74 | 44 | 80 | 9023001 |

### LW

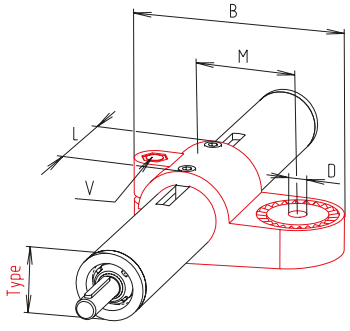


[mm]

| Code No. | Type | B | D | L | M | Clamping levers V Code No. |
|---|---|---|---|---|---|---|
| 11814_00 | 18 | 59 | M 6 | 25 | 27 | 90210 |
| 13014_0_ | 30 | 93.5 | M 8 | 40 | 43 | 9022401 |
| 14014_0_ | 40 | 127 | M10 | 56 | 60 | 9024301 |
| 15014_0_ | 50 | 148 | M10 | 66 | 70 | 9024401 |

0 = without scale
A = scale at 270°

0 = without slide bushing
1 = with slide bushing

## Carriages

### LQ

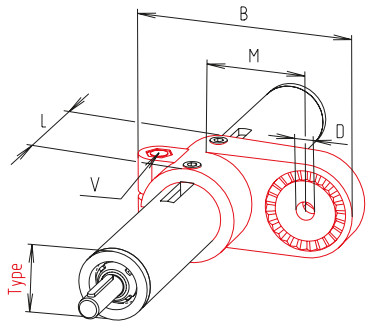


[mm]

| Code No. | Type | B | D | L | M | Clamping levers V Code No. |
|---|---|---|---|---|---|---|
| 13015 _ 0 _ | 30 | 93.5 | M 8 | 45 | 43 | 9022401 |
| 14015 _ 0 _ | 40 | 128 | M10 | 60 | 60 | 9024301 |
| 15015 _ 0 _ | 50 | 148 | M10 | 70 | 70 | 9024401 |

### S

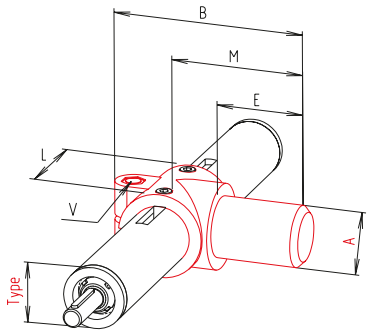


[mm]

| Code No. | Type | A | B | E | L | M | Clamping levers V Code No. |
|---|---|---|---|---|---|---|---|
| 11818 _ 00 | 18 | 18 | 72.5 | 33 | 32 | 48 | 90210 |
| 13018 _ 0 _ | 30 | 30 | 100 | 42 | 45 | 67 | 9022201 |
| 14018 _ 0 _ | 40 | 40 | 135 | 57 | 60 | 88 | 90250 |
| 15018 _ 0 _ | 50 | 50 | 148 | 67 | 70 | 103 | 9025101 |
| 16018 _ 0 _ | 60 | 60 | 188 | 82 | 85 | 125 | 9025301 |

### GW

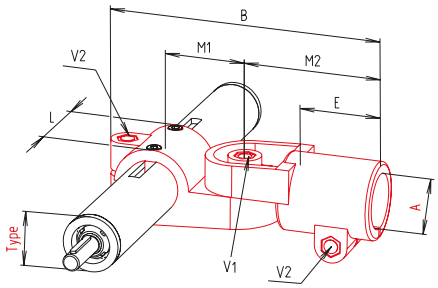


[mm]

| Code No. | Type | A | B | E | L | M1 | M2 | V1 / V2 Clamping levers V Code No. |
|---|---|---|---|---|---|---|---|---|
| 11816 _ 00 | 18 | 18 | 90.5 | 25 | 25 | 27 | 44 | 90210 |
| 13016 _ 0 _ | 30 | 30 | 146.5 | 45 | 40 | 43 | 73 | 9022401 |
| 14016 _ 0 _ | 40 | 40 | 200 | 60 | 56 | 60 | 100 | 9024301 |
| 15016 _ 0 _ | 50 | 50 | 230 | 70 | 66 | 70 | 115 | 9024401 |

0 = without scale
A = scale at 270°

0 = without slide bushing
1 = with slide bushing

## Carriages

### EK

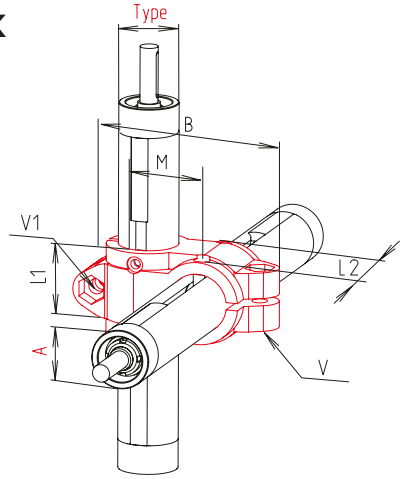


[mm]

| Code No. | Type | A | B | L1 | L2 | M | V1 | V |
|---|---|---|---|---|---|---|---|---|
| | | | | | | | Clamping levers Code No. | |
| 11819 _ 00 | 18 | 18 | 66 | 25.5 | 25.5 | 20 | 90209 | |
| 13020 _ 0_ | 30 | 18 | 84 | 40 | 30 | 27 | 9022201 | 90209 |
| 13019 _ 0_ | 30 | 30 | 99 | 40 | 40 | 33 | 9022201 | |
| 14020 _ 0_ | 40 | 30 | 137 | 65 | 65 | 45 | 90251 | |
| 14019 _ 0_ | 40 | 40 | 137 | 60 | 60 | 45 | 90250 | |
| 15020 _ 0_ | 50 | 40 | 137.5 | 65 | 65 | 45 | 90251 | |
| 15019 _ 0_ | 50 | 50 | 137.5 | 65 | 65 | 45 | 90251 | |
| 16020 _ 0_ | 60 | 50 | 180 | 80 | 50 | 60 | 9025301 | 9025501 |
| 16019 _ 0_ | 60 | 60 | 190 | 80 | 80 | 65 | 9025301 | |
| 18019 _ 00 | 80 | 80 | 255 | 120 | 120 | 90 | 9027001 | |

### EKS

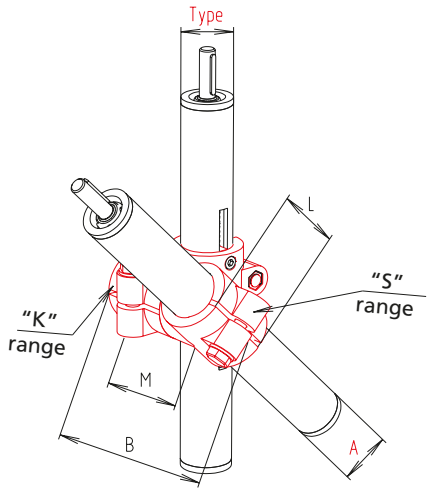


[mm]

| Code No. | Type | A | B | L | M | Range K | Range S |
|---|---|---|---|---|---|---|---|
| | | | | | | Clamping levers Code No. | |
| 13022 _ 0_ | 30 | 18 | 65 | 25 | 29 | 9022201 | 90210 |
| 13021 _ 0_ | 30 | 30 | 94 | 45 | 43 | 9022201 | |
| 14022 _ 0_ | 40 | 30 | 119 | 45 | 56 | 90251 | 9022201 |
| 14021 _ 0_ | 40 | 40 | 132 | 60 | 61 | 90250 | |
| 15022 _ 0_ | 50 | 40 | 169 | 60 | 64 | 90251 | |
| 15021 _ 0_ | 50 | 50 | 169 | 70 | 69 | 90251 | |
| 16022 _ 0_ | 60 | 50 | 151 | 70 | 76 | 9025501 | |
| 16021 _ 0_ | 60 | 60 | 186 | 85 | 65 | 9025301 | |

0 = without scale
A = scale at 270°

0 = without slide bushing
1 = with slide bushing

## Drive key for carriages

- Rotation locking for additional free-running carriages

**Note:** The order number of the linear unit includes a drive key



[mm]

| Code No. | Type | Installation length |
|---|---|---|
| 95990 | E 18 | 24 |
| 95987 | E-II 30 | 38 |
| 95997 | E-II 40 | 55 |
| 95998 | E-II 40 x 20* | 55 |
| 95988 | E-II 50 | 60 |
| 95989 | E-II 60 | 75 |
| 95996 | E 80 | 100 |

* For carriage KD 40 x 20

## Fixing elements

- Clamping elements for the simple fixing of E units
- For further elements, please refer to the catalogue "Connecting Technology"

**Material:** Gk Al Si 12, vibratory polished

Coloured powder-coatings available on request.

For further dimensions, please refer to the catalogue "Connecting Technology"

## FK

[mm]

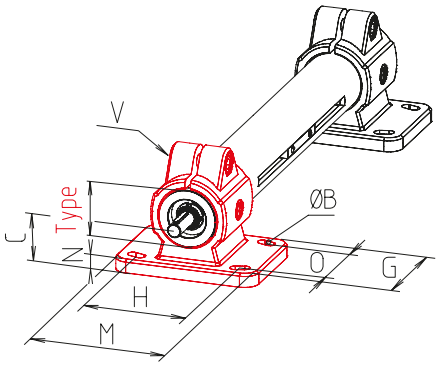


| Code No. | Type | B | C | G | H* | M | N | O* | Clamping levers V Code No. |
|---|---|---|---|---|---|---|---|---|---|
| 12180000020 | 18 | 5.5 | 18 | 37 | 40 | 50 | 5 | –** | 90209 |
| 12300000020 | 30 | 6.5 | 30 | 55 | 53-60 | 78 | 7 | –** | 9022201 |
| 12300100020 | 30-4 | 6.5 | 30 | 55 | 53-60 | 78 | 7 | 35-40 | 9022201 |
| 12400000020 | 40 | 8.5 | 42 | 80 | 80-82 | 105 | 10 | 52-60 | 90250 |
| 12500000020 | 50 | 10.5 | 50 | 90 | 98-100 | 128 | 14 | 60-62 | 90251 |
| 12600000020 | 60 | 10.5 | 60 | 110 | 100-118 | 150 | 15 | 74-80 | 9025301 |
| 12800000020 | 80 | 17.5 | 80 | 164.7 | 140 | 180 | 20 | 120 | 9027001 |

* Type 30-60 with slot
** Type 18-30 with central drill holes

If using FK elements as carriages and fixing elements, spacers provide the necessary clearance.

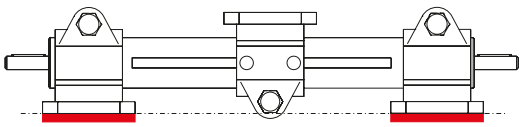

| Code No. | Type | Spacer |
|---|---|---|
| 96713 | 30 | 5 mm plate thickness, vibratory finished |
| 96714 | 40 | |
| 96716 | 60 | |

## FKR

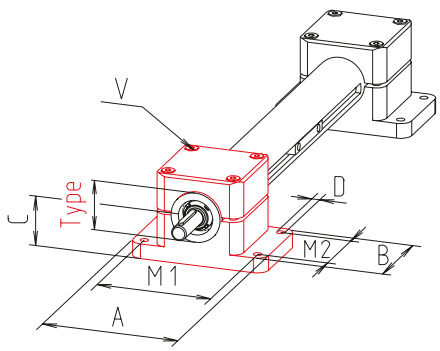


[mm]

| Code No. | Type | A | B | C | D | M1 | M2 | Clamping levers V Code No. |
|---|---|---|---|---|---|---|---|---|
| 22300003026 | 30 | 100 | 60 | 30 | 6.5 | 82 | 42 | 9021501 |
| 22400003026 | 40 | 110 | 70 | 40 | 6.5 | 92 | 52 | 9021701 |
| 22500003026 | 50 | 125 | 125 | 50 | 8.5 | 98 | 98 | 9023001 |
| 22600003026 | 60 | 144 | 100 | 60 | 8.5 | 122 | 78 | 9023101 |

## Fixing elements

### K

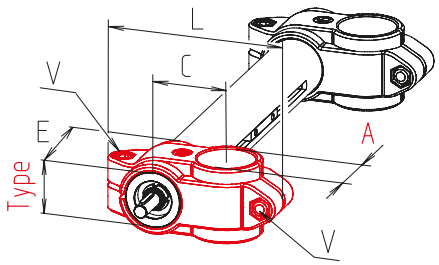


[mm]

| Code No. | Type | A | C | E | L | Clamping levers V Code No. |
|---|---|---|---|---|---|---|
| 101800000200 | 18 | 18 | 20 | 25.5 | 66 | 90209 |
| 103000000200 | 30 | 30 | 33 | 40 | 99 | 9022201 |
| 104000000200 | 40 | 40 | 45 | 60 | 137 | 90250 |
| 105000000200 | 50 | 50 | 53 | 70 | 154 | 90251 |
| 106000000200 | 60 | 60 | 65 | 80 | 190 | 9025301 |
| 108000000200 | 80 | 80 | 90 | 120 | 255 | 9021701 |

### KRR

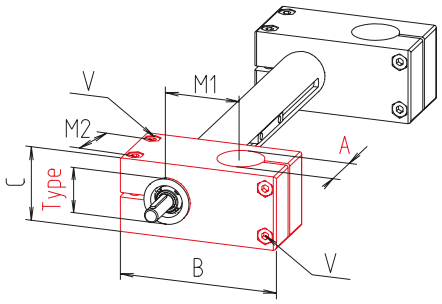


[mm]

| Code No. | Type | A | B | C | E | M1 | M2 | Clamping levers V Code No. |
|---|---|---|---|---|---|---|---|---|
| 203000030266 | 30 | 30 | 82,5 | 45 | 63 | 37.5 | 44 | 9021301 |
| 204000030266 | 40 | 40 | 110 | 60 | 75 | 50 | 53 | 9021501 |
| 205000030266 | 50 | 50 | 149 | 86 | 86 | 70 | 65 | 9022801 |
| 206000030266 | 60 | 60 | 170 | 100 | 100 | 80 | 78 | 9022801 |

### FS

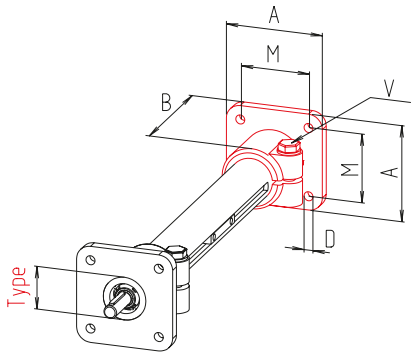


[mm]

| Code No. | Type | D | M | B | A | Clamping levers V Code No. |
|---|---|---|---|---|---|---|
| 13180000020 | 18 | 5.8 | 30 | 37 | 42 | 90209 |
| 13300000020 | 30 | 6.5 | 40-42 | 50 | 60 | 9022201 |
| 13400000020 | 40 | 8.5 | 60-64 | 70 | 90 | 90250 |
| 13500000020 | 50 | 10.5 | 74-80 | 85 | 105 | 90251 |
| 13600000020 | 60 | 10.5 | 80 | 100 | 120 | 905301 |
| 13800000020 | 80 | 17.5 | 120 | 141.4 | 174.5 | 9027001 |

* Type 30-50 with slot

### W

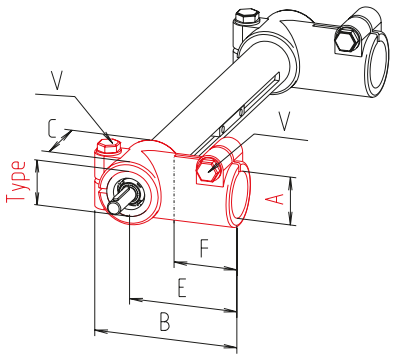


[mm]

| Code No. | Type | A | C | E | L | M | Clamping levers V Code No. |
|---|---|---|---|---|---|---|---|
| 111800000200 | 18 | 18 | 30 | 32 | 67.5 | 43 | 90209 |
| 113000000200 | 30 | 30 | 40 | 45 | 93 | 60 | 9022201 |
| 114000000200 | 40 | 40 | 60 | 60 | 134 | 88 | 90250 |
| 115000000200 | 50 | 50 | 65 | 70 | 149 | 98 | 90251 |
| 116000000200 | 60 | 60 | 80 | 80 | 183 | 120 | 9025301 |
| 118000000200 | 80 | 80 | 121.7 | 123 | 259 | 176.8 | 9027001 |

## Fixing elements

### WR

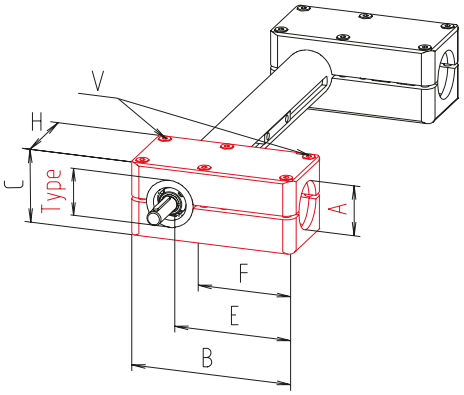


[mm]

| Code No. | Type | A | B | C | E | F | H | Clamping levers V Code No. |
|---|---|---|---|---|---|---|---|---|
| 214000030266 | 40 | 40 | 140 | 62 | 105 | 70 | 70 | 9021601 |
| 215000030266 | 50 | 50 | 161 | 79 | 118 | 85 | 86 | 9022901 |
| 216000030266 | 60 | 60 | 190 | 90 | 140 | 100 | 100 | 9023001 |

### GF

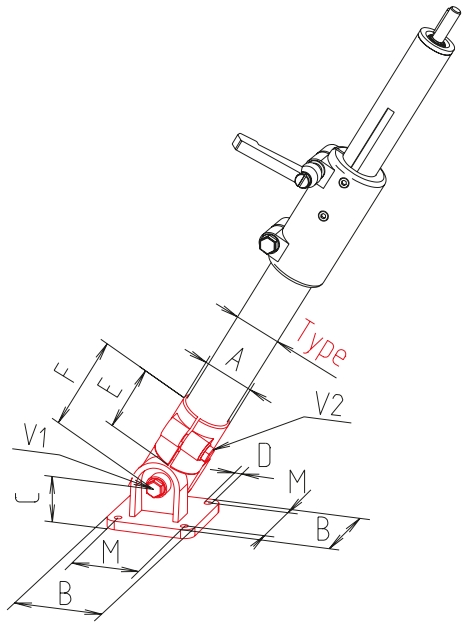


[mm]

| Code No. | Type | A | B | C | D | E | F | M | V1 / V2 Clamping levers Code No. |
|---|---|---|---|---|---|---|---|---|---|
| 18180002020 | 18 | 18 | 35x50 | 20 | 5.3 | 25 | 44 | 38 | 90210 |
| 18250002020 | 25 | 25 | 75 | 32.5 | 6.5 | 45 | 73 | 57 | 9022401 |
| 18300002020 | 30 | 30 | 75 | 32.5 | 6.5 | 45 | 73 | 57 | 9022401 |
| 18320002020 | 32 | 32 | 100 | 44 | 8.5 | 60 | 100 | 76 | 9024301 |
| 18400002020 | 40 | 40 | 100 | 44 | 8.5 | 60 | 100 | 76 | 9024301 |
| 18500002020 | 50 | 50 | 125 | 52 | 8.5 | 70 | 115 | 98 | 9024401 |

RK ROSE+KRIEGER



## Fixing elements

### FHR

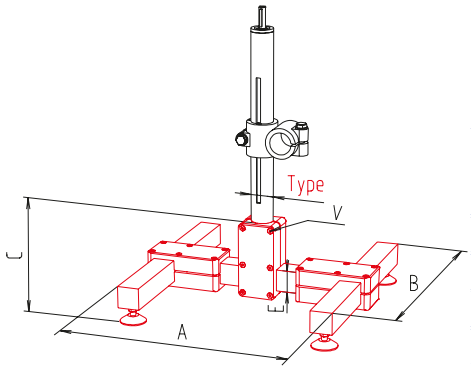


[mm]

| Code No. | Type | A | B | C | E | Clamping levers V Code No. |
|---|---|---|---|---|---|---|
| 233000200 _ _ _ | 30 | 350 | 350 | 120 | 30 | 9021401 |
| 234000200 _ _ _ | 40 | 400 | 400 | 140 | 40 | 9021601 |
| 235000200 _ _ _ | 50 | 500 | 500 | 161 | 50 | 9022901 |
| 236000200 _ _ _ | 60 | 600 | 600 | 190 | 60 | 9023001 |

### FHNR

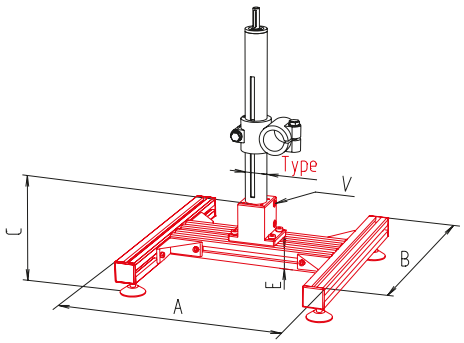


[mm]

| Code No. | Type | A | B | C | E | Clamping levers V Code No. |
|---|---|---|---|---|---|---|
| 233000220 _ _ _ | 30 | 350 | 350 | 90 | 40 | 9022201 |
| 234000220 _ _ _ | 40 | 400 | 400 | 110 | 40 | 90250 |
| 235000220 _ _ _ | 50 | 500 | 500 | 145 | 60 | 90251 |
| 236000220 _ _ _ | 60 | 600 | 600 | 190 | 60 | 9025301 |

### FPFS*

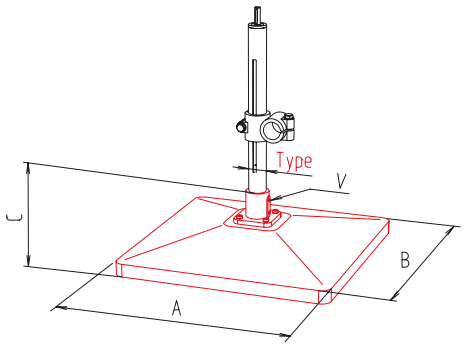


[mm]

| Code No.* | Type | A | B | C | Clamping levers V Code No. |
|---|---|---|---|---|---|
| 134000120 _ _ _ _ | 40 | 500 | 500 | 150 | 90250 |
| 135000120 _ _ _ _ | 50 | 500 | 500 | 165 | 90251 |
| 136000120 _ _ _ _ | 60 | 500 | 500 | 180 | 9025301 |

* For versions, please also refer to the catalogue “Connecting Technology”

## Covers

- Slot covers, can be used as dust protection or stroke limitation
- Can be shortened or lengthened if required

**Material:** Stainless steel
**Scope of delivery:** Pack of 2 cover strips or as bar material



The covers are available as a pack of two, or as bar material.



The linear unit comes with two covers for the bearing seats.



Additional covers can be inserted in the guide slot.

| Code No. | Type | Length [mm] |
|---|---|---|
| Covers, pack of 2 | | |
| 90440 | 30 | 63 |
| 90441 | 40 | 57 |
| 90442 | 50 | 60 |
| 90443 | 60 | 74 |
| Cover, bar material | | |
| 90445 | 30 | 3010 |
| 90446 | 40 | 3010 |
| 90447 | 50 | 3010 |
| 90448 | 60 | 3010 |

RK ROSE+KRIEGER

## Clamping lever

- For the equipping of fixing elements and carriages

**Material:** Zinc die cast handle
Steel parts galvanised

Stainless steel lever available on request.



Lever for slide clamp



Lever for component clamp

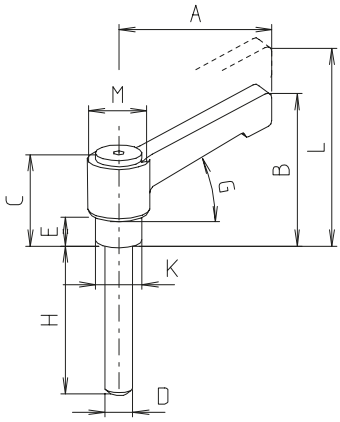


[mm]

| Code No. | Type | A | B | C | D | E | G | H | K | L | M |
|---|---|---|---|---|---|---|---|---|---|---|---|
| 9302501 | M5x20 | 40 | 33,5 | 26 | M5 | 5,5 | 20° | 20 | 7,5 | 37,5 | 13,5 |
| 90210 | M6x16 | 40 | 35,4 | 26 | M6 | 6,5 | 20° | 16 | 10 | 37,5 | 13,5 |
| 90209 | M6x18 | 40 | 35,5 | 26 | M6 | 6,5 | 20° | 18 | 10 | 37,5 | 13,5 |
| 90249 | M6x20 | 45 | 35,5 | 26 | M6 | 6,5 | 20° | 20 | 10 | 37,5 | 13,5 |
| 9021501 | M6x45 | 63 | 43 | 31 | M6 | 6,5 | 20° | 45 | 10 | 45,5 | 19,5 |
| 9021601 | M6x55 | 63 | 43 | 31 | M6 | 6,5 | 20° | 55 | 10 | 47 | 18 |
| 9022201 | M8x25 | 63 | 45 | 33 | M8 | 8,5 | 20° | 25 | 13 | 49 | 18 |
| 9022401 | M8x35 | 65 | 45 | 33 | M8 | 8,5 | 20° | 35 | 13 | 49 | 18 |
| 9022501 | M8x45 | 63 | 45 | 33 | M8 | 8,5 | 20° | 45 | 13 | 49 | 18 |
| 9022601 | M8x50 | 63 | 45 | 33 | M8 | 8,5 | 20° | 50 | 13 | 49 | 18 |
| 9022801 | M8x60 | 63 | 45 | 33 | M8 | 8,5 | 20° | 60 | 13 | 49 | 18 |
| 9022901 | M8x70 | 78 | 53,5 | 36 | M8 | 8,5 | 20° | 70 | 13 | 57,5 | 22 |
| 9023001 | M8x80 | 78 | 53,5 | 36 | M8 | 8,5 | 20° | 80 | 16 | 59 | 22 |
| 90250 | M10x30 | 78 | 55 | 38 | M10 | 11 | 20° | 30 | 16 | 59 | 26 |
| 90251 | M10x35 | 78 | 55 | 38 | M10 | 11 | 20° | 35 | 16 | 59 | 26 |
| 9024301 | M10x50 | 78 | 55 | 38 | M10 | 10 | 20° | 50 | 16 | 59 | 26 |
| 9024401 | M10x60 | 92 | 62 | 42 | M10 | 10 | 20° | 60 | 16 | 68 | 26 |
| 9025501 | M12x40 | 95 | 64 | 42,5 | M12 | 13,5 | 20° | 40 | 18 | 68 | 26 |
| 9025301 | M12x45 | 95 | 64 | 42,5 | M12 | 13,5 | 20° | 45 | 18 | 68 | 26 |
| 9027001 | M16x72 | 100 | 72 | 65 | M16 | 19 | 20° | 65 | 23 | 72 | 33 |

## Handwheel

**Material:** Die-cast aluminium
black powder-coating



Diam. 140-200



Diam. 60-100

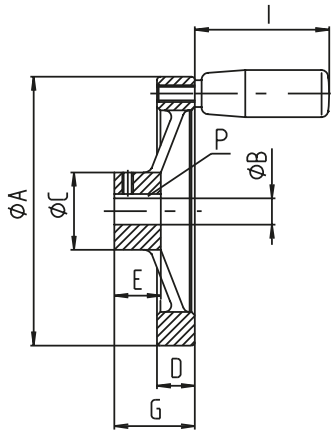


[mm]

| Code No. | Type | Diam. A | B | C | D | E | G | P | I |
|---|---|---|---|---|---|---|---|---|---|
| 90901 | 18 | 60 | 6 | 18 | 13 | 16 | 22 | 2 x 2 | 28 |
| 90913 | 30 | 100 | 8 | 28 | 14 | 17 | 30 | 2 x 2 | 52 |
| 90915 | 40-50 | 100 | 12 | 28 | 14 | 17 | 30 | 4 x 4 | 52 |
| 90905 | 40-50 | 140 | 12 | 36 | 16.5 | 19.5 | 36 | 4 x 4 | 66 |
| 90906 | 60 | 140 | 14 | 36 | 16.5 | 19.5 | 36 | 5 x 5 | 66 |
| 90918 | 60 | 160 | 14 | 36 | 18 | 20 | 39 | 5 x 5 | 80 |
| 90929 | 80 | 200 | 20 | 42 | 20.5 | 24 | 45 | 6 x 6 | 80 |

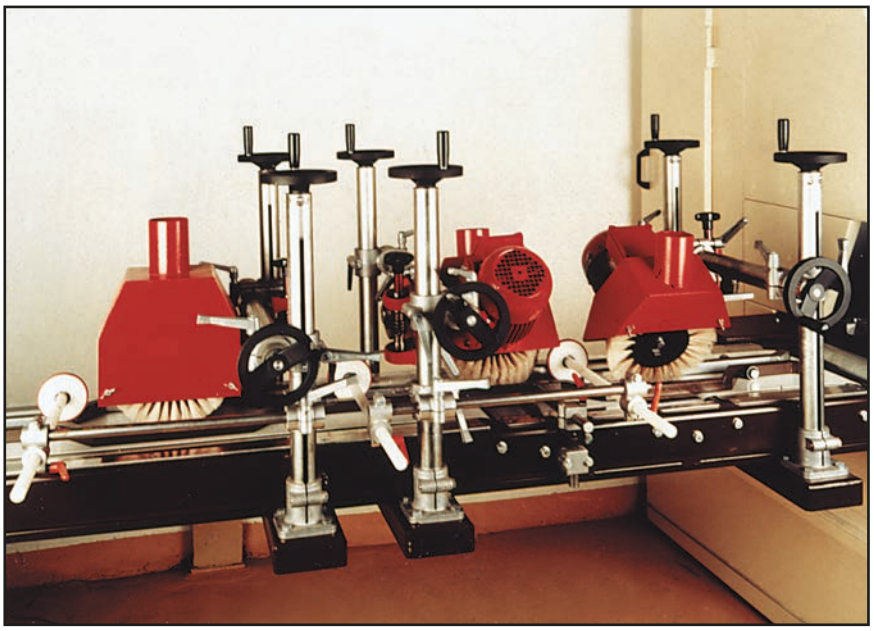

## Chain wheel

- Other sizes on request

**Material:** Steel, 500 N/mm² min



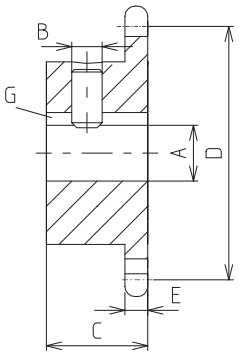


[mm]

| Code No. | Type | A | B | C | D | E | G | No. of teeth | Size |
|---|---|---|---|---|---|---|---|---|---|
| 91703 | 30 | 8 | M6 | 18 | 41.1 | 4.5 | 2 x 2 | 10 | 1/2 x 3/16" |
| 91704 | 40 | 12 | M6 | 20 | 53 | 4.5 | 4 x 4 | 13 | 1/2 x 3/16" |
| 91705 | 50 | 12 | M6 | 20 | 61 | 4.5 | 4 x 4 | 15 | 1/2 x 3/16" |
| 91706 | 60 | 14 | M6 | 25 | 85 | 4.5 | 5 x 5 | 21 | 1/2 x 3/16" |
| 91708 | 80 | 20 | M6 | 25 | 85 | 4.5 | 6 x 6 | 21 | 1/2 x 3/16" |

## HTD timing-belt pulley

- Suitable for maintenance-free continuous operation
- Excellent accuracy and zero backlash during change of direction
- Can be clamped on feather key

**Material:** Steel



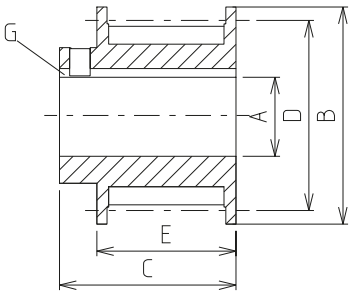


[mm]

| Code No. | Type | A | B | C | D | E | G | Pull force | Pitch |
|---|---|---|---|---|---|---|---|---|---|
| 92103 | 30 | 8 | 23 | 20 | 19.09 | 14.5 | 2 x 2 | 220 N | 5 |
| 92105 | 40/50 | 12 | 32 | 26 | 28.65 | 20.5 | 4 x 4 | 330 N | 5 |
| 92106 | 60 | 14 | 32 | 26 | 28.65 | 20.5 | 5 x 5 | 330 N | 5 |

# E linear units – Drive

## Angular drive

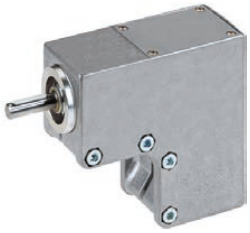

- If angular drives are fitted, the linear units are delivered exclusively with ball bearings

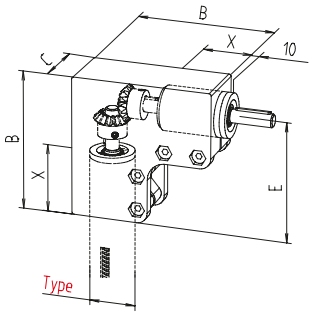


**Scope of delivery:** Housing, bevel gear set and transmission unit

**Material:** Angular drive housing made of die cast aluminium
Steel parts galvanised

Power transmission of bevel gears

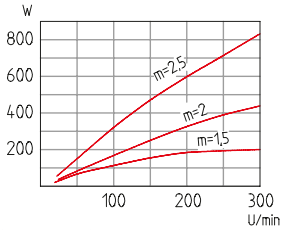


[mm]

| Code No. | Type | i | Mod-ule | No. of teeth | Dia-meter | B | C | E | X |
|---|---|---|---|---|---|---|---|---|---|
| 91523 | 30 | 1:1 | 1.5 | 16 | 8 | 96 | 42 | 75 | 43 |
| 91504 | 40 | 1:1 | 2 | 16 | 12 | 128 | 54 | 100 | 55 |
| 91555 | 50 | 1:1 | 2.5 | 16 | 12 | 148 | 65 | 115 | 68 |
| 91506 | 60 | 1:1 | 2.5 | 16 | 14 | 170 | 80 | 130 | 80 |

## Angular drive housing



- For plug-in angular drive connection of 2 E linear units fitted with bevel gears.

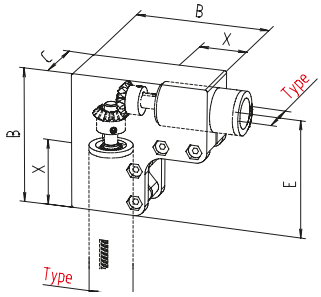


**Material:** Angular drive housing, die cast aluminium. Steel parts, galvanised

[mm]

| Code No. | Type | B | C | E | X |
|---|---|---|---|---|---|
| 213000090266 | 30 | 96 | 42 | 75 | 43 |
| 214000090266 | 40 | 128 | 54 | 100 | 55 |
| 215000090266 | 50 | 148 | 65 | 115 | 68 |
| 216000090266 | 60 | 170 | 80 | 130 | 80 |

## Transmission unit



- For torque transmission with parallel linear units

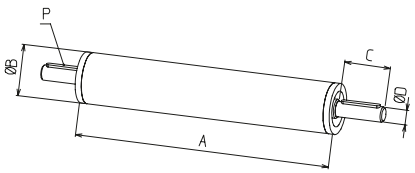


**Material:** Tube and bearing elements galvanised steel,
Shaft bright

[mm]

| Code No. | Type | A (basic length) | B | C | D | P |
|---|---|---|---|---|---|---|
| 92523_ _ _ _ | 30 | 53 | 30 | 26 | 8 | 2 x 2 x 20 |
| 92544_ _ _ _ | 40 | 65 | 40 | 38 | 12 | 4 x 4 x 32 |
| 92555_ _ _ _ | 50 | 78 | 50 | 38 | 12 | 4 x 4 x 32 |
| 92506_ _ _ _ | 60 | 90 | 60 | 38 | 14 | 5 x 5 x 32 |

Length [mm]

## Bevel gear set

- Straight toothed
- Pressure angle 20°
- Shaft angle 90°
- Crowned tooth flanks



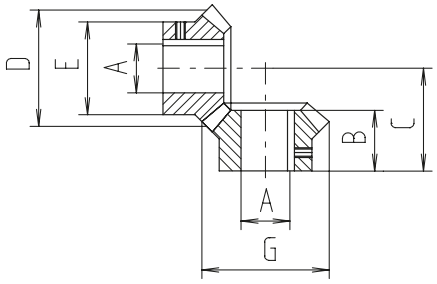


[mm]

| Code No. | Type | A | B | C | D | E | G | No. of teeth | Module |
|---|---|---|---|---|---|---|---|---|---|
| 91603 | Set 30 | 8 | 15 | 24 | 24 | 18 | 26.11 | 16 | 1.5 |
| 91623 | Single component 30 | 8 | 15 | 24 | 24 | 18 | 26.11 | 16 | 1.5 |
| 91604 | Set 40 | 12 | 19 | 31 | 32 | 26 | 35 | 16 | 2 |
| 91664 | Single component 40 | 12 | 19 | 31 | 32 | 26 | 35 | 16 | 2 |
| 91605 | Set 50 | 12 | 22 | 37 | 40 | 32 | 44 | 16 | 2.5 |
| 91625 | Single component 50 | 12 | 22 | 37 | 40 | 32 | 44 | 16 | 2.5 |
| 91606 | Set 60 | 14 | 22 | 37 | 40 | 32 | 44 | 16 | 2.5 |
| 91666 | Single component 60 | 14 | 22 | 37 | 40 | 32 | 44 | 16 | 2.5 |

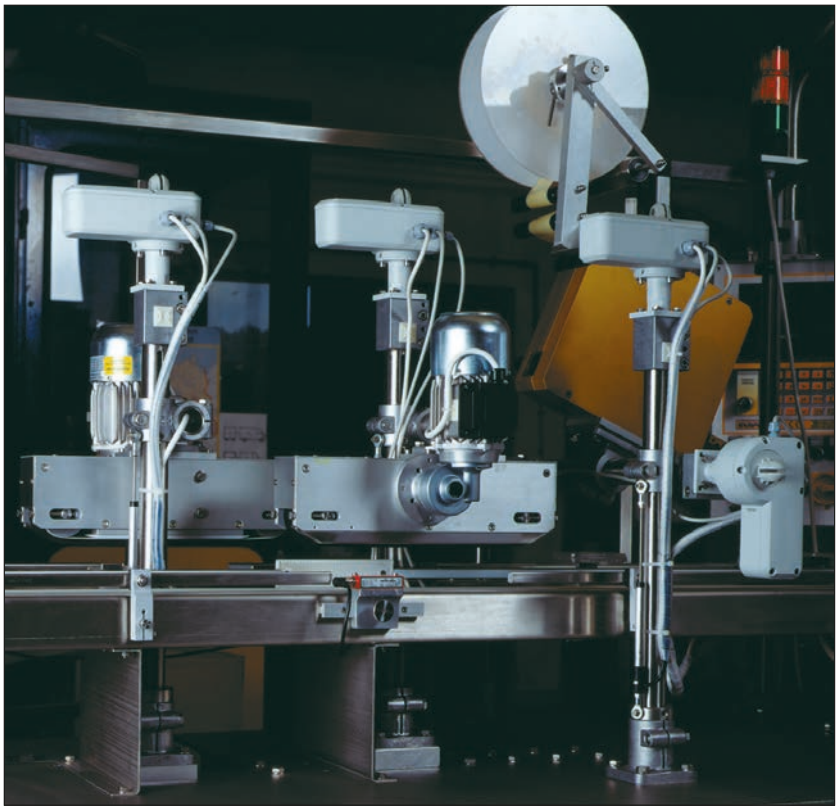

## Selection table - motor adaptor/coupling

| Type | Three-phase motor | | EHL electr. handwheel | Drive unit | |
|---|---|---|---|---|---|
| | 90/120 W | 180/250 W | | LZ S | LZ P |
| E 30 | 949983 | – | 92663 | 949700 | 949701 |
| | 9109200812 | – | – | 9109200810 | 9109200810 |
| E 40 | 949984 | – | 92664 | 949702 | 949703 |
| | 9114301212 | – | – | 9114301012 | 9114301012 |
| E 50 | 949985 | – | 92684 | 949704 | 949705 |
| | 9114301212 | – | – | 9114301012 | 9114301012 |
| E 60 | – | 949606 | 949666 | 949706 | – |
| | – | 9119401414 | – | 9114301014 | – |
| E 80 | – | 950001 | 92682 | on request | – |
| | – | 9119401420 | – | 9119401020 | – |

Code No. Motor adaptor:
**950001**

Code No. Coupling with specification of shaft diameter
1st end = 12 mm
2nd end = 12 mm:
**9114301212**

**Note:**
For further details on motor versions, please refer to the chapter "Motors and controls"

## Motor adaptor for three-phase motor



- Clampable adaptor
- Flange surface machined

**Material:** Die-cast aluminium

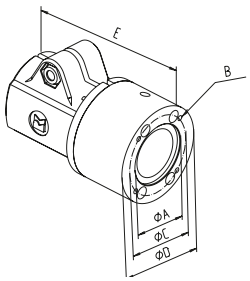


[mm]

| Code No. | Type | A | B | C | D | E |
|---|---|---|---|---|---|---|
| 949983 | 30 | 50 | M5 | 65 | 80 | 102.5 |
| 949984 | 40 | 50 | M5 | 65 | 80 | 128 |
| 949985 | 50 | 50 | M5 | 65 | 80 | 128 |
| 949606 | 60 | 80 | M6 | 100 | 120 | 136 |
| 950001 | 80 | 80 | M6 | 100 | 120 | 199.5 |

## Coupling



- Small size
- Shaft connection without backlash
- Maintenance-free
- Easy plug-in assembly

**Material:** Hub – aluminium
Spider ring – polyurethane

To ensure proper function of the coupling, a clearance of **D + 3 mm** is required.

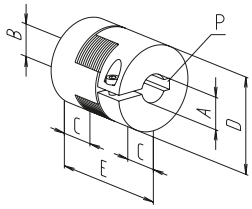


[mm]

| Code No. | Type | A | B | C | D | E | P | Torque [Nm] | |
|---|---|---|---|---|---|---|---|---|---|
| | | | | | | | | with feather key | without feather key |
| 9109200812 | 30 | 8 | 12 | 10 | 22 | 30 | 2 x 2/4 x 4 | 5 | 3 |
| 9114301212 | 40/50 | 12 | 12 | 11 | 30 | 35 | 4 x 4/4 x 4 | 12 | 6 |
| 9119401414 | 60 | 14 | 14 | 25 | 40 | 65 | 5 x 5/5 x 5 | 17 | 10 |
| 9119401420 | 80 | 14 | 20 | 25 | 40 | 65 | 5 x 5/6 x 6 | 17 | 10 |

## Motor adaptor for EHL electronic handwheel

- Clampable adaptor
- Incl. coupling

**Note:** To mount the motor adaptor on a Type E linear unit, a sleeve clamp is required (this is included with the adaptor). Please note that the stroke may be limited.

**Linear unit connection**

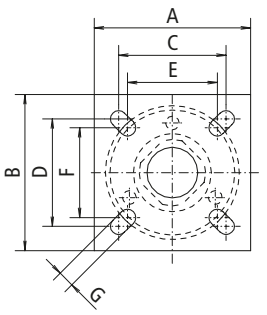


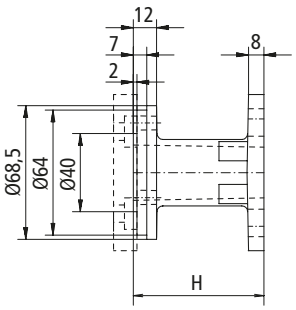


**EHL connection**

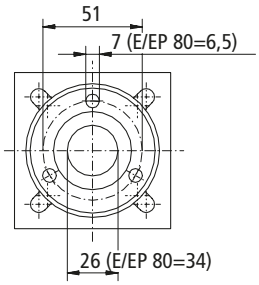


**Only for linear unit Type E**

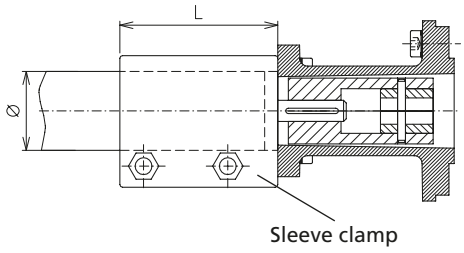


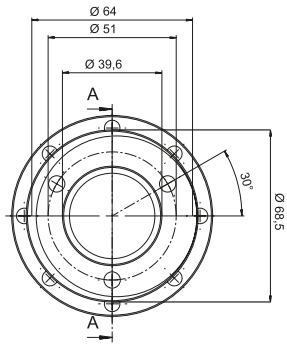


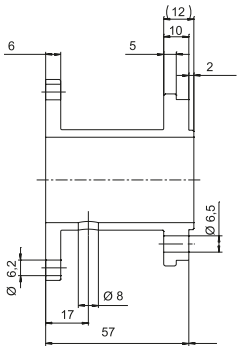


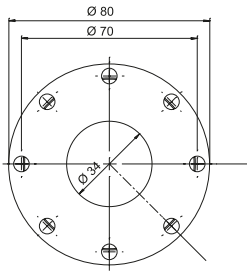


Further adaptors available on request

[mm]

| Code No. | for linear unit | Shaft diam. unit | A | B | C | D | E | F | G | H | L | Diam-eter |
|---|---|---|---|---|---|---|---|---|---|---|---|---|
| 92663 | E 30 | 8 | 50 | 50 | 30 | 40 | 30 | 30 | 6 | 67 | 60 | 30 |
| 92664 | E 40 | 12 | 60 | 60 | 46 | 46 | 36 | 36 | 7 | 67 | 75 | 40 |
| 92684 | E 50 | 12 | 65 | 65 | 46 | 46 | – | – | 9 | 67 | 67 | 60 |
| 949666 | E 60 | 14 | 80 | 80 | 55 | 55 | 46 | 46 | 9 | 67 | 93 | 60 |
| 92682 | E 80 | 20 | 80 | 80 | 70 | 70 | – | – | 6.2 | 59 | | 80 |

## Motor adaptor for LZ S/P drive unit

- Clampable adaptor

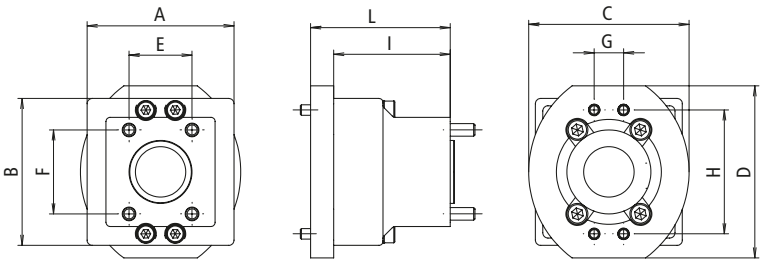


[mm]

| Linear unit | LZ S Code No. | LZ P Code No. | Coupling Code No. | A | B | C | D | E | F | G | H | I | L |
|---|---|---|---|---|---|---|---|---|---|---|---|---|---|
| E 30 | 949700 | 949701 | 9109200810 | 56 | 74 | 76.4 | 82 | – | – | 56.5 | 39.6 | 65 | 134 |
| E 40 | 949702 | 949703 | 9114301012 | 89.2 | 66 | 76.4 | 82 | – | – | 56.5 | 39.6 | 78 | 129 |
| E 50 | 949704 | 949705 | 9114301012 | 66 | 84 | 76.4 | 82 | – | – | 56.5 | 39.6 | 78 | 129 |
| E 60 | 949706 | – | 9114301014 | 80 | 103 | 76.4 | 82 | – | – | 52.3 | 52.3 | 92 | 143 |
| E 80 | on request | | 9119401020 | on request | | | | | | | | | |

**Order information:**

- Position of scale on 0° or 180° as option

## Scale

**Material:** High-performance film, transparent

- Self-adhesive
- Width:10 mm
- 4 mm high figures

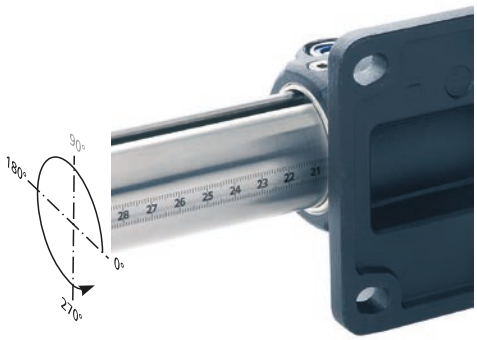


Image shows scale mounted at 0°, to be read from right to left. Standard mounting at 270° (Type 30-60: 90° not technically possible, Type 80: (90° and 180° not technically possible)

[mm]

| Type | Can be read from | Length | Version |
|---|---|---|---|
| 30-60* | left to right | 0-2000 | fitted |
| | right to left | 0-2000 | fitted |

* Type 18 and 80 available on request.



## Positioning indicator

- Max ambient temperature +80°C
- Figure height 6 mm
- Reading accuracy ± 0.1 mm
- If positioning indicators are fitted, the linear units are delivered exclusively with ball bearings

**Material:** Housing polyamide 6
Orange RAL 2004,
Steel parts, corrosion protected

**Scope of delivery:** Positioning indicator, clamping ring, shaft extension and fastenings

**Note:** "rising" and "falling" versions refer to the clockwise rotation of the drive shaft.



Installation position: horizontal

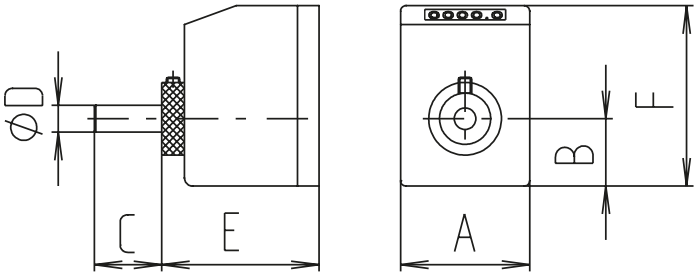




Installation position: vertical

[mm]

| Type | Instal-lation position | Code No. | Version | Code No. | Version | A | B | C | D | E | F |
|---|---|---|---|---|---|---|---|---|---|---|---|
| 18 | Horizontal | 91001 | 2 mm rising | 910129 | 4 mm rising | 48 | 29 | 17 | 6 | 60 | 67 |
| 18 | | 91011 | 2 mm falling | 910130 | 4 mm falling | 48 | 29 | 17 | 6 | 60 | 67 |
| 18 | Vertical | 91021 | 2 mm rising | 910131 | 4 mm rising | 48 | 29 | 17 | 6 | 60 | 67 |
| 18 | | 91031 | 2 mm falling | 910132 | 4 mm falling | 48 | 29 | 17 | 6 | 60 | 67 |
| 30 | Horizontal | 91043 | 3 mm rising | 91010 | 6 mm rising | 48 | 25 | 18 | 8 | 59 | 67 |
| 30 | | 91053 | 3 mm falling | 91029 | 6 mm falling | 48 | 25 | 18 | 8 | 59 | 67 |
| 30 | Vertical | 91063 | 3 mm rising | 91020 | 6 mm rising | 48 | 25 | 18 | 8 | 59 | 67 |
| 30 | | 91073 | 3 mm falling | 91019 | 6 mm falling | 48 | 25 | 18 | 8 | 59 | 67 |
| 40 | Horizontal | 91004 | 4 mm rising | 91030 | 8 mm rising | 48 | 25 | 38 | 12 | 59 | 67 |
| 40 | | 91014 | 4 mm falling | 91039 | 8 mm falling | 48 | 25 | 38 | 12 | 59 | 67 |
| 40 | Vertical | 91024 | 4 mm rising | 91040 | 8 mm rising | 48 | 25 | 38 | 12 | 59 | 67 |
| 40 | | 91034 | 4 mm falling | 91041 | 8 mm falling | 48 | 25 | 38 | 12 | 59 | 67 |
| 50 | Horizontal | 91045 | 4 mm rising | 91046 | 8 mm rising | 48 | 25 | 38 | 12 | 59 | 75 |
| 50 | | 91055 | 4 mm falling | 91047 | 8 mm falling | 48 | 25 | 38 | 12 | 59 | 75 |
| 50 | Vertical | 91065 | 4 mm rising | 91048 | 8 mm rising | 48 | 25 | 38 | 12 | 59 | 75 |
| 50 | | 91075 | 4 mm falling | 91049 | 8 mm falling | 48 | 25 | 38 | 12 | 59 | 75 |
| 60 | Horizontal | 91006 | 5 mm rising | 91056 | 10 mm rising | 48 | 25 | 38 | 14 | 60 | 81 |
| 60 | | 91016 | 5 mm falling | 91057 | 10 mm falling | 48 | 25 | 38 | 14 | 60 | 81 |
| 60 | Vertical | 91026 | 5 mm rising | 91058 | 10 mm rising | 48 | 25 | 38 | 14 | 60 | 81 |
| 60 | | 91036 | 5 mm falling | 91059 | 10 mm falling | 48 | 25 | 38 | 14 | 60 | 81 |
| 80 | Horizontal | 91101 | 6 mm rising | 910133 | 12 mm rising | 64 | 29 | 31 | 20 | 60 | 94 |
| 80 | | 91102 | 6 mm falling | 910134 | 12 mm falling | 64 | 29 | 31 | 20 | 60 | 94 |
| 80 | Vertical | 91103 | 6 mm rising | 910135 | 12 mm rising | 64 | 29 | 31 | 20 | 60 | 94 |
| 80 | | 91104 | 6 mm falling | 910136 | 12 mm falling | 64 | 29 | 31 | 20 | 60 | 94 |

# E linear units – Position determination

## Mechanical limit switch



**Material:** Thermoplastic, fully insulated

| Type | 18-60 | 80 |
|---|---|---|
| Max. voltage | 250 V AC | 230 V AC |
| Max. switching current | 6 A | 4 A |
| Max. starting current | 16 A | – |
| Operating frequency | Max. 6000/h | Max. 5000/h |
| Mechanical lifetime | 10 million switching cycles | 20 million switching cycles |
| Axis lever adjustment | locking at 10° increments | |
| Protection class | IP 65 | IP 67 |
| Ambient temperature | -30°C to +80°C | |

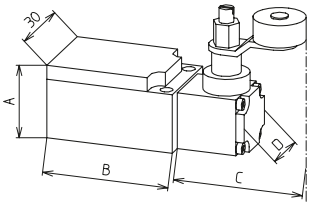


[mm]

| Code No. | Type | Switching function | A | B | C | D |
|---|---|---|---|---|---|---|
| 91905 | 18-60 | NC/NO | 26.5 | 45 | 45.5 | 21 |
| 91908 | 80 | NC/NO | 30 | 58.5 | 46 | 20 |

## E limit switch holder



- Limit switch can be moved and fixed axially

**Scope of delivery:** Holder with limit switch

**Material:** Aluminium

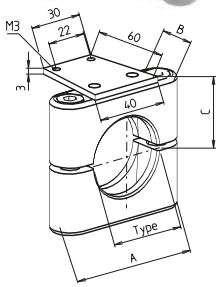


[mm]

| Code No. | Type | A | B | C | D | E | F | G | H |
|---|---|---|---|---|---|---|---|---|---|
| 92764 | 30 | 60 | 16 | 28 | M4 | 3 | 30 | 60 | 40 |
| 92766 | 40 | 75 | 20 | 37 | M4 | 3 | 30 | 60 | 40 |
| 92768 | 50 | 85 | 20 | 42.5 | M4 | 3 | 30 | 60 | 40 |
| 92769 | 60 | 100 | 22 | 48 | M4 | 3 | 30 | 60 | 40 |
| 927101 | 80 | 130 | 30 | 71 | M4 | 10 | 70 | 70 | 70 |

## Inductive limit switch

- Maintenance-free

**Material:** Housing - brass, chrome-plated



| Type | 18-60 | 80 |
|---|---|---|
| Voltage | 10 - 30 V DC | |
| Max. switching current | 200 mA | 150 mA |
| Operating distance | 4 mm for steel | 2 mm for steel |
| Protection class | IP 67 | |
| Ambient temperature | -25°C to +70°C | |
| Cable lengths | 2m | |

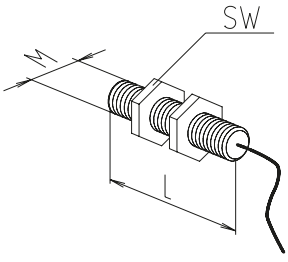


[mm]

| Code No. | Type | Switching function | L | M | Wrench size (SW) |
|---|---|---|---|---|---|
| 92825 | 18-60 | Changeover | 50 | 12x1 | 17 |
| 92826 | 80 | Changeover | 40 | 8x1 | 13 |




Positioning of a labelling machine via a crossing E tubular linear unit

# Twin tube guides – RE

**Robust guide**
**for simple adjustment of medium loads**

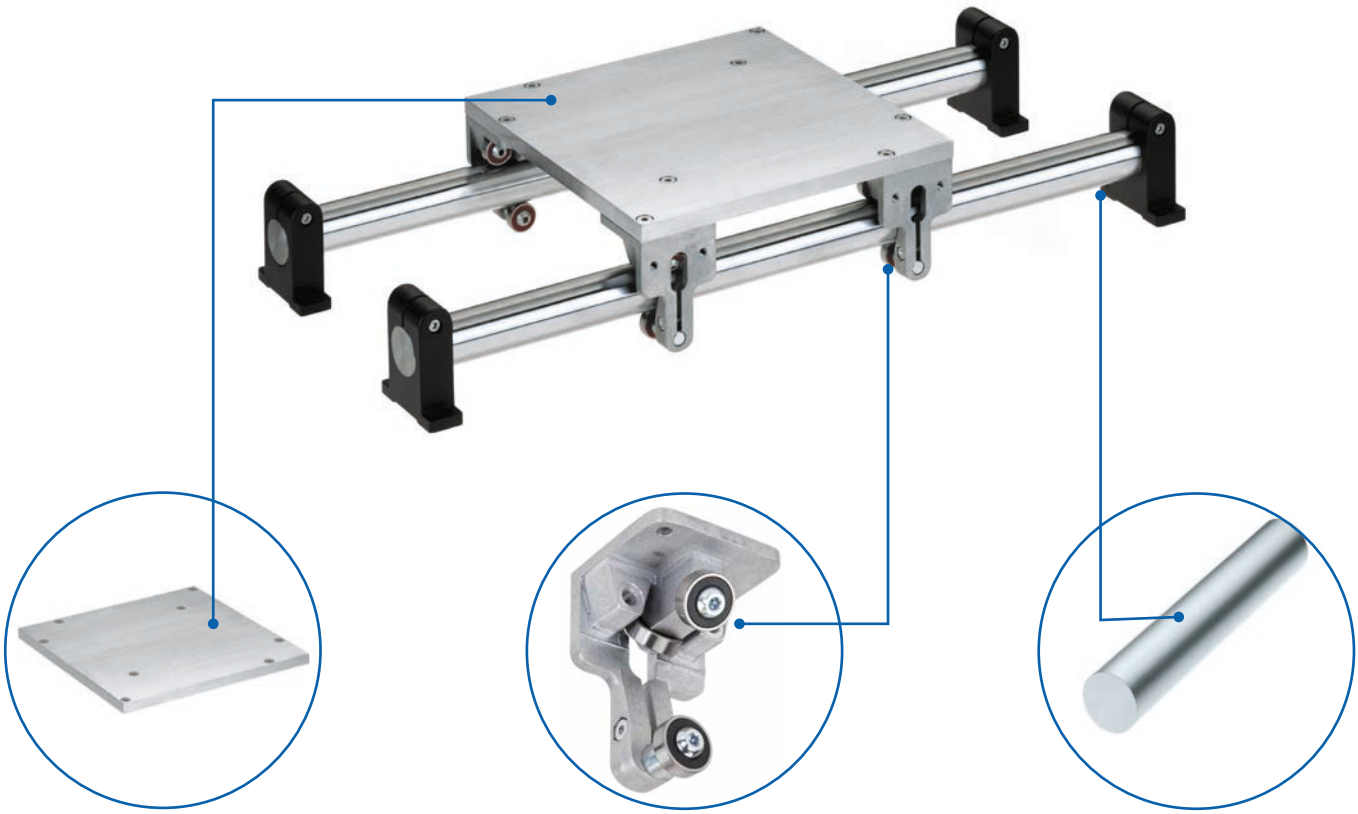

**Fixing plate**
✓ Large plate for the simple connection of components

**Rollers**
✓ Can be adjusted with zero backlash

**Guide element**
✓ As hardened shaft

**Features:**

- Simple and robust design
- Cost-effective

# RE linear guide - Table of contents


## Properties/Technical data

- General information/operating conditions ..... 78
- Load data ..... 79

## Versions
**(Dimensions, order numbers)**

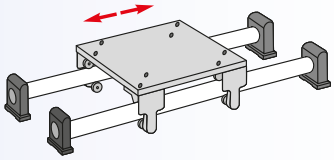

- RE linear guide ..... 80 - 81

## Accessories

**Fixing**

- Fixing plate ..... 82
- FKW shaft bracket ..... 82
- Guide shaft ..... 82

**Drive**

- RF/RL roller guide element ..... 83

## General information/operating conditions

| | |
|---|---|
| **Design** | Simple and robust twin tube guide unit |
| **Guide** | Roller guide, can be adjusted with zero backlash |
| **Installation position** | Any position |
| **Max. travel speed** | 2.5 m/s |
| **Self-locking** | No |
| **Ambient temperature** | 0°C to +60°C |

## Load data

F Force [N]

M Moment [Nm]

I Geometric moment of inertia [$cm^4$]

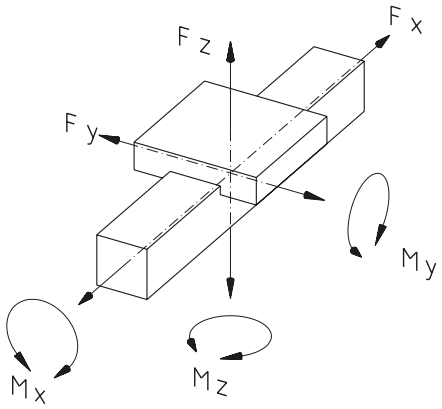


* with reference to carriage (deflection of guide element f = 1.0 mm, static, end elements supported)

| Type | Fy | Fz | | | | Mx | My | Mz |
|---|---|---|---|---|---|---|---|---|
| Total length [mm] | | 1500 | 2000 | 2500 | 3000 | | | |
| RE 30 | 330 | 1600 | 400 | 200 | 125 | 65 | 65 | 20 |
| RE 40 | 600 | 2400 | 1050 | 650 | 400 | 155 | 155 | 65 |

## Geometric moment of inertia

[$cm^4$]

| Type | Iy | Iz |
|---|---|---|
| RE 30 | 8.0 | 700.0 |
| RE 40 | 25.1 | 3348.0 |

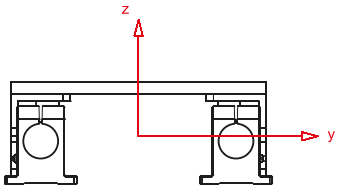

**Order information:**

- Longer travel lengths on request

**Version ■ Guide**



| Code No. | Type | Rollers | Guide element | Basic length | B | C | ØD1 | ØD2 | F | H |
|---|---|---|---|---|---|---|---|---|---|---|
| MEA3000AA | RE 30 | Steel | Shaft, hardened | 250 | 210 | 98 | 30 | 7 | 86 | 40 |
| MEA4000AA | RE 40 | Steel | Shaft, hardened | 360 | 315 | 120 | 40 | 7 | 105 | 50 |

_ _ _ _ Total length = basic length + travel [mm]

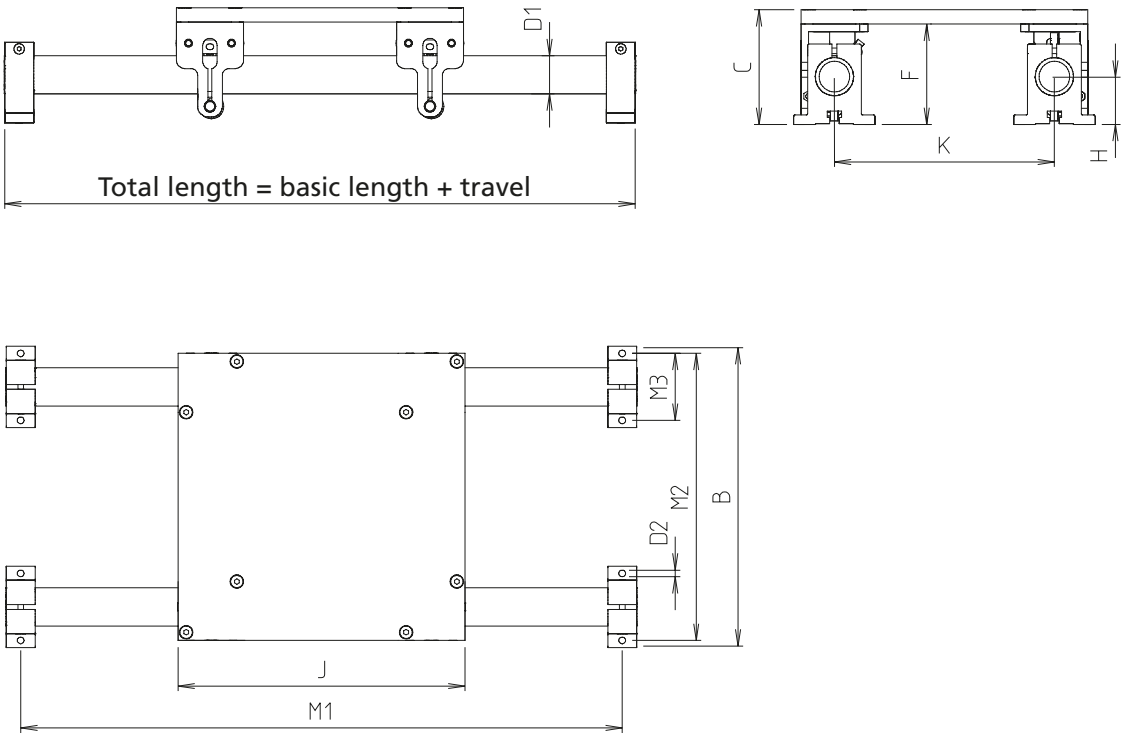


[mm]

| I | J | K | M1 | M2 | M3 | max. travel | Mass [kg] | |
|---|---|---|---|---|---|---|---|---|
| | | | | | | | Basic length | per 100 mm travel |
| 200 | 200 | 140 | 225 | 196 | 56 | 3000 | 5,7 | 1,1 |
| 300 | 300 | 230 | 330 | 300 | 70 | 3000 | 13,5 | 2,0 |

## Fixing plate

- Connecting plate for roller guide elements

**Material:**
Al-K100, surface-ground, surface roughness ≈ 2µm



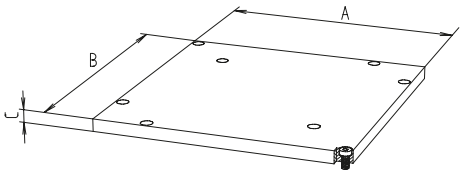


[mm]

| Code No. | A ± 0.4 | B ± 0.4 | C ± 0.15 |
|---|---|---|---|
| 6821272020 | 200 | 200 | 12 |
| 6821272030 | 200 | 300 | 12 |
| 6821573030 | 300 | 300 | 15 |
| 6821573040 | 300 | 400 | 15 |

## FKW shaft bracket

- Fixing element for guide shafts/tube

**Material:**
Body of element, aluminium die casting, black powder-coating, VA screws



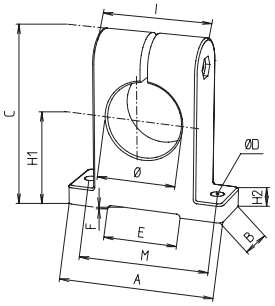


[mm]

| Code No. | Type | Ø h8 | A | B | C | Ø D | H1 ± 0.1 | H2 | I | M |
|---|---|---|---|---|---|---|---|---|---|---|
| 52300013030 | FKW 30 | 30 | 70 | 25 | 72.5 | 7 | 40 | 7 | 42 | 56 |
| 52400013030 | FKW 40 | 40 | 85 | 30 | 92 | 7 | 50 | 10 | 56 | 70 |

## Guide shaft

- Shaft, induction hardened, ground and polished
- Hardness: 62 HRC.
- Roughness value Ra ≤ 0.35 mm



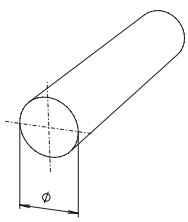


[mm]

| Code No. | Diameter | Material | Tolerance | max. length |
|---|---|---|---|---|
| Guide shaft | | | | |
| 8030005 | 30 | Cf53 hard chrome-plated | h7 | 6000 |
| 8040005 | 40 | Cf53 hard chrome-plated | h7 | 6000 |

## RF roller guide element -fixed bearing-

- Ready-to-install element
- Can be adjusted with zero backlash
- Steel rollers

**Material:** Body of element, aluminium die casting, vibratory finished
Steel parts galvanised



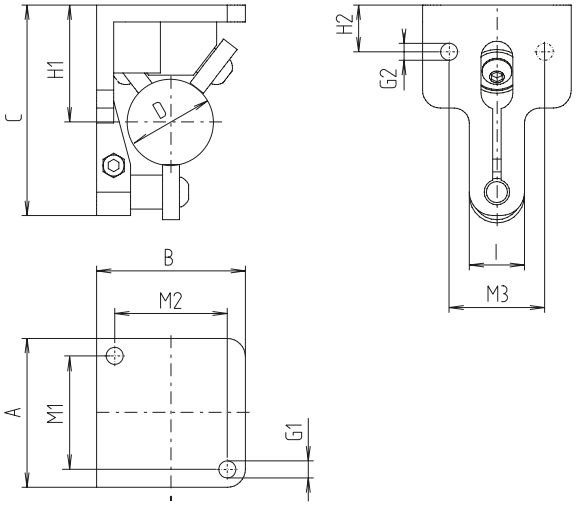


[mm]

| Code No. | Type | Rollers | Max. load [N] | A | B | C | D | G1 | G2 | H1 | H2 | I | M1 | M2 | M3 |
|---|---|---|---|---|---|---|---|---|---|---|---|---|---|---|---|
| 6023014 | RF 30 | Steel | 700 | 60 | 60 | 83 | 30 | M8-8 deep | | 46 | 20 | 22 | 44 | 44 | 38 |
| 6024014 | RF 40 | Steel | 1000 | 70 | 70 | 99 | 40 | M8-8 deep | | 55 | 22 | 26 | 53 | 53 | 45 |

## RL roller guide element -floating bearing-

- Ready-to-install element
- Can be adjusted with zero backlash
- Steel rollers

**Material:** Body of element, aluminium die casting, vibratory finished
Steel parts galvanised



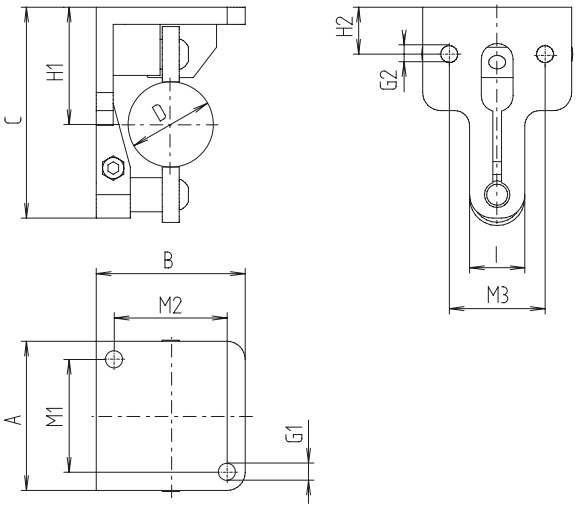


[mm]

| Code No. | Type | Rollers | Max. load [N] | A | B | C | D | G1 | G2 | H1 | H2 | I | M1 | M2 | M3 |
|---|---|---|---|---|---|---|---|---|---|---|---|---|---|---|---|
| 6023024 | RL 30 | Steel | 700 | 60 | 60 | 83 | 30 | M8-8 deep | | 46 | 20 | 22 | 44 | 44 | 38 |
| 6024024 | RL 40 | Steel | 1000 | 70 | 70 | 99 | 40 | M8-8 deep | | 55 | 22 | 26 | 53 | 53 | 45 |

# Twin tube actuator – EP(X)

## The robust twin tube unit – compensates for high bending moments during hand and motor-driven adjustments

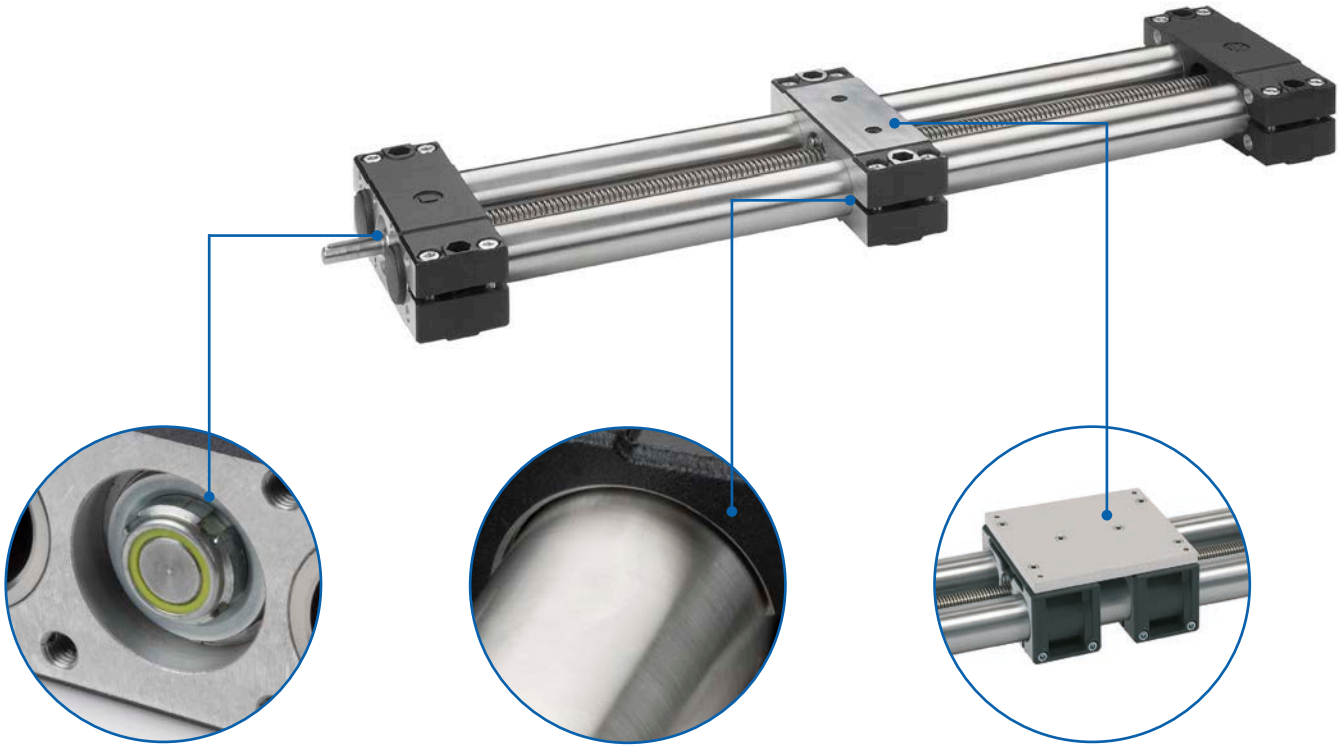

**Screw with choice of slide bearing or ball bearing**

✓ Ideal for use in environments with fine dust/abraded particles due to slide bearings

**Carriages available with optional slide bushing**

✓ Lower input torque at shaft

✓ Wear minimised on carriage

**Large fixing plate**

✓ The EPX version is equipped with two carriages that are connected via a large fixing plate

✓ Enables high moments

### Features:

- Enables high moments
- Version available with large fixing plate

### Options:

- Corrosion-protected units
- Bellows
- Second not driven carriage

# EP(X) tubular linear unit - Table of contents

## Properties/Technical data


- General information/operating conditions ..... 86
- Load data ..... 87
- Geometric moments of inertia ..... 87


## Versions
(Dimensions, order numbers)

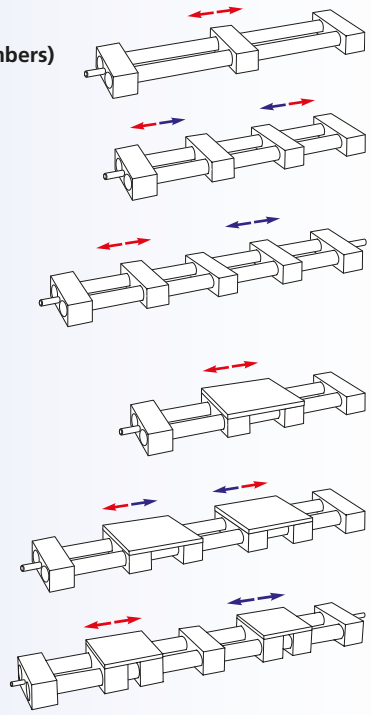


- EP right *or* lefthand thread ..... 88 - 89
- EP right *and* lefthand thread ..... 90 - 91
- EP *split* screw ..... 92 - 93
- EPX right *or* lefthand thread ..... 94 - 95
- EPX right *or* lefthand thread ..... 96 - 97
- EPX *split* screw ..... 98 - 99


## Accessories

**Drive**


- Handwheel ..... 100
- Chain wheel ..... 100
- HTD Timing-belt pulley ..... 101
- Bevel gear set ..... 101
- Angular drive/Adaptor for angular drive ..... 102
- Motor adaptor/coupling ..... 104 - 105


**Position determination**


- Scale ..... 106
- Positioning indicator ..... 107
- Limit switch ..... 108 - 109

# EP(X) – Technical data

## General information/operating conditions

| | |
|---|---|
| Design | Twin tube actuator with ACME screw/For EP 18 and EPX 18 solid shaft instead of tube |
| Guide | Slide guide, optional carriage with slide guide available |
| Installation position | Any position |
| Lead accuracy | ± 0.2 mm/300 mm stroke |
| Self-locking | Yes |
| Ambient temperature | 0°C to +60°C |

## Screw lead

| Type | Screw lead [mm] | Speed with slide bearing [mm/s] | Speed with ball bearing [mm/s] |
|---|---|---|---|
| EP / EPX 18 | 2 | 2.7 | 8.3 |
| EP / EPX 30 | 3 | 4 | 12.5 |
| EP / EPX 40 | 4 | 5.3 | 16.7 |
| EP / EPX 50 | 4 | 5.3 | 16.7 |
| EP / EPX 60 | 5 | 6.7 | 20.8 |
| EP / EPX 80 | 6 | 8 | 25 |

$$\text{Required screw speed* n [rpm]} = \frac{\text{speed [m/min] x 1000}}{\text{screw lead [mm]}}$$

Max. screw speed with slide bearing 80 rpm
with ball bearing 250 rpm

## No-load torque

[Nm]

| Type | with ball bearing | with slide bearing |
|---|---|---|
| EP 18 | 0.30 | * |
| EP 30 | 0.60 | 0.75 |
| EP 40 | 0.70 | 0.85 |
| EP 50 | 1.10 | 1.25 |
| EP 60 | 1.40 | * |
| EP 80 | 1.00 | * |

[Nm]

| Type | with ball bearing | with slide bearing |
|---|---|---|
| EPX 18 | 0.40 | * |
| EPX 30 | 0.70 | 0.75 |
| EPX 40 | 0.80 | 0.85 |
| EPX 50 | 1.20 | 1.25 |
| EPX 60 | 1.50 | * |
| EPX 80 | 1.40 | * |

* Type 18, 60 and 80 spindle only available with ball bearing

## Load data*

F Force [N]

M Moment [Nm]

I Geometric moment of inertia [$cm^4$]

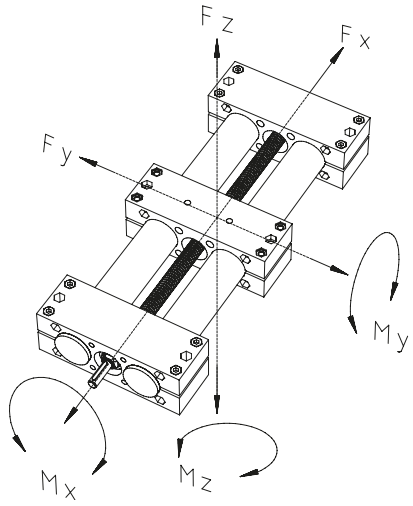


* with reference to carriage (deflection of guide element f = 0.5 mm, static, end elements supported)

| Type | Fx | Fy | | | Fz | | | Mx | My | Mz |
|---|---|---|---|---|---|---|---|---|---|---|
| Total length [mm] | 500 | 500 | 1000 | 1500 | 500 | 1000 | 1500 | | | |
| EP 18 | 400 | 200 | 100 | – | 100 | 70 | – | 20 | 30 | 35 |
| EP 30 | 800 | 1000 | 800 | 500 | 550 | 300 | 100 | 60 | 60 | 75 |
| EP 40 | 1000 | 3500 | 2600 | 1300 | 2000 | 580 | 120 | 120 | 130 | 150 |
| EP 50 | 1700 | 3800 | 2300 | 2050 | 3000 | 670 | 170 | 160 | 200 | 260 |
| EP 60 | 2500 | 6600 | 5400 | 4900 | 6000 | 2600 | 330 | 300 | 340 | 480 |
| EP 80 | 4500 | 11000 | 9000 | 7500 | 8000 | 3700 | 700 | 400 | 530 | 620 |
| EPX 18 | 400 | 270 | 170 | – | 130 | 100 | – | 40 | 45 | 70 |
| EPX 30 | 800 | 1400 | 1200 | 700 | 650 | 450 | 200 | 80 | 110 | 140 |
| EPX 40 | 1000 | 6000 | 3100 | 1800 | 2200 | 680 | 220 | 160 | 190 | 240 |
| EPX 50 | 1700 | 7700 | 5000 | 2500 | 3300 | 830 | 310 | 240 | 345 | 510 |
| EPX 60 | 2500 | 11000 | 9000 | 7800 | 7000 | 2900 | 580 | 520 | 610 | 910 |
| EPX 80 | 4500 | 14000 | 11700 | 10100 | 9100 | 4800 | 750 | 650 | 780 | 1100 |

## Geometric moment of inertia

[$cm^4$]

| Type | Iy | Iz |
|---|---|---|
| EP(X) 18 | 1.03 | 21.39 |
| EP(X) 30 | 3.47 | 46.57 |
| EP(X) 40 | 14.84 | 198.06 |
| EP(X) 50 | 30.81 | 319.84 |
| EP(X) 60 | 65.88 | 795.90 |
| EP(X) 80 | 237.41 | 3168.98 |

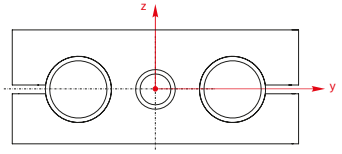

# EP – Versions

**Order information:**

- Corrosion-protected units available on request
- Second free-running carriage available on request
- Bellows version available as optional extra

**Version** ■ **Right *or* lefthand thread**



Type 18-60 (image similar)



Type 80

| Code No. | Type | Spindle | Basic length | B | C | D1 | D2 | D3 | F | G1** | G2 | H | J | L1 | L2 | M1 | M2 | M3 | M4 |
|---|---|---|---|---|---|---|---|---|---|---|---|---|---|---|---|---|---|---|---|
| 72_181_ | 18 | 10x2 | 87 | 82 | 29 | 6 | – | 16 $^{H7}$ | 1 | – | M5/5 deep | 14.5 | 28 | 17 | – | – | 68 | 40 | 18 |
| 72_183_ | | | | | | | 6 | | | | | | | | 17 | | | | |
| 72_301_ | 30 | 14x3 | 150 | 130 | 54 | 8 | – | 30 $^{H8}$ | 2 | M6 / 12 deep | M6/9 deep | 27 | 50 | 26 | – | 40x 30 | 114.5 | 70 | 42 |
| 72_303_ | | | | | | | 8 | | | | | | | | 26 | | | | |
| 72_401_ | 40 | 20x4 | 180 | 180 | 63 | 12 | – | 40 $^{H8}$ | 3 | M8 / 20 deep | M8/8 deep | 31.5 | 60 | 38 | – | 46 | 160 | 90 | 62 |
| 72_403_ | | | | | | | 12 | | | | | | | | 38 | | | | |
| 72_501_ | 50 | 20x4 | 216 | 206 | 73 | 12 | – | 40 $^{H8}$ | 1 | M8 / 30 deep | M8/8 deep | 36.5 | 72 | 38 | – | 46 | 184 | 100 | 62 |
| 72_503_ | | | | | | | 12 | | | | | | | | 38 | | | | |
| 72_601_ | 60 | 24x5 | 240 | 240 | 88 | 14 | – | 50 $^{H8}$ | 2 | M8 / 20 deep | M10/10 deep | 44 | 80 | 38 | – | 55 | 216 | 130 | 74 |
| 72_603_ | | | | | | | 14 | | | | | | | | 38 | | | | |
| 72_801_ | 80 | 32x6 | 360 | 302 | 143 | 20 | – | 70 $^{H7}$ | 4.5 | M8 / 20 deep | M10/20 deep | 71.5 | 120 | 31.5 | – | 64 | – | 180 | – |
| 72_803_ | | | | | | | 20 | | | | | | | | 31.5 | | | | |

_ _ _ _ Total length = basic length + travel [mm]

**Bearing:**
0 = spindle with slide bearing*
1 = spindle with ball bearing
2 = spindle with slide bearing* and carriage with slide bushing
3 = spindle with ball bearing and carriage with slide bushing

**Version:**
1 = righthand thread
2 = lefthand thread

* Type 18, 60 and 80 spindle only available with ball bearing
** G1 thread only available on spindle with ball bearing

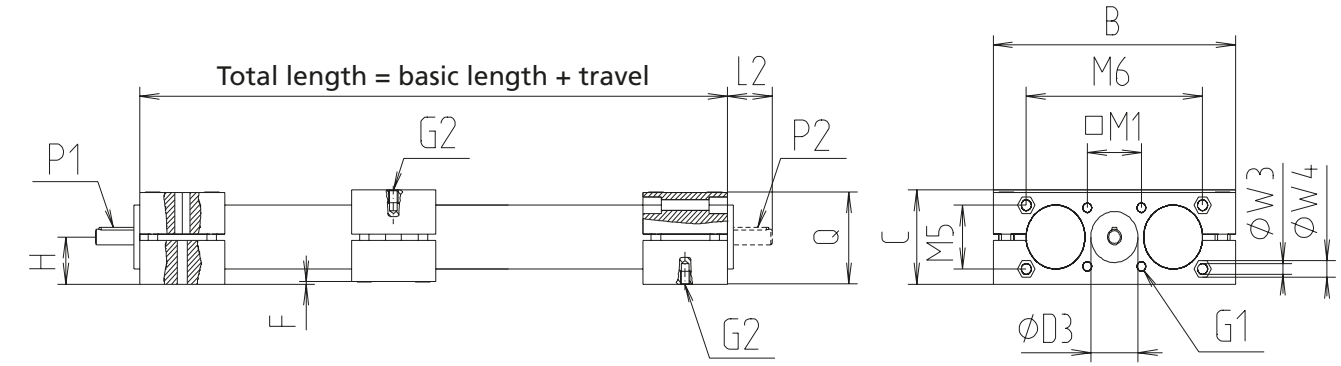


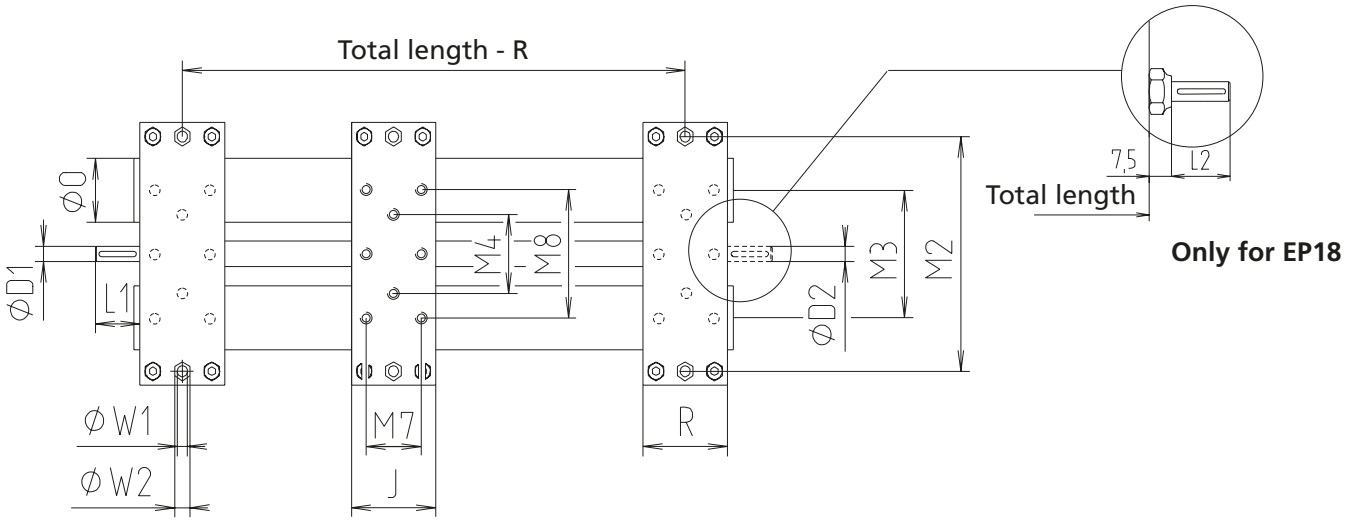


**Only for EP18**

[mm]

| M 5 | M 6 | M 7 | M 8 | O | P 1 | P 2 | Q | R | W 1 | W 2 | W 3 | W 4 | Max. travel | Mass [kg] | |
|---|---|---|---|---|---|---|---|---|---|---|---|---|---|---|---|
| | | | | | | | | | | | | | | Basic length | per 100 mm travel |
| – | – | – | – | 18 | 2x2x12 | – | 28 | 28 | 5.5 | A/F 8/6.5 deep | – | – | 1096 | 0.775 | 0.45 |
| | | | | | | 2x2x12 | | | | | | | 1079 | 0.779 | 0.45 |
| 35 | 92 | – | – | 30 | 2x2x20 | – | 52 | 50 | 6.5 | A/F 10 / 26.5 deep | – | – | 1424 | 2.065 | 0.33 |
| | | | | | | 2x2x20 | | | | | | | 1398 | 2.075 | 0.33 |
| 38 | 132 | – | – | 40 | 4x4x32 | – | 60 | 60 | 8.5 | A/F 13 / 32 deep | 6.5 | A/F 11/7 deep | 2820 | 4.925 | 0.90 |
| | | | | | | 4x4x32 | | | | | | | 2820 | 4.960 | 0.90 |
| 50 | 150 | – | – | 50 | 4x4x32 | – | 72 | 72 | 8.5 | A/F 13 / 37.5 deep | 8.5 | A/F 13/8.5 deep | 2784 | 7.438 | 1.10 |
| | | | | | | 4x4x32 | | | | | | | 2784 | 7.473 | 1.10 |
| 60 | 185 | – | – | 60 | 5x5x32 | – | 86 | 80 | 10.5 | A/F 17 / 44.5 deep | 8.5 | A/F 13/8.5 deep | 2760 | 13.420 | 1.63 |
| | | | | | | 5x5x32 | | | | | | | 2760 | 13.466 | 1.63 |
| – | – | 80 | 180 | 80 | 6x6x22 | – | 138.5 | – | – | – | – | – | 2640 | 35.920 | 3.47 |
| | | | | | | 6x6x22 | | | | | | | 2640 | 36.010 | 3.47 |

# EP – Versions

**Order information:**

- Please specify total travel when placing an order
- Corrosion protected units available on request
- Second free running carriage available on request
- Bellows version available as optional extra

**Version ■ Right *and* lefthand thread**



Type 18-60 (image similar)



Type 80

Righthand thread

Lefthand thread (shaft end L1)

| Code No. | Type | Spindle | Basic length | B | C | D 1 | D 2 | D 3 | F | G 1** | G 2 | H | J | L 1 | L 2 | M 1 | M 2 | M 3 | M 4 |
|---|---|---|---|---|---|---|---|---|---|---|---|---|---|---|---|---|---|---|---|
| 72318_ _ | 18 | 10x2 | 118 | 82 | 29 | 6 | 6 | $16^{H7}$ | 1 | – | M5/5 deep | 14.5 | 28 | 17 | 17 | – | 68 | 40 | 18 |
| 72330_ _ | 30 | 14x3 | 200 | 130 | 54 | 8 | 8 | $30^{H8}$ | 2 | M6/12 deep | M6/9 deep | 27 | 50 | 26 | 26 | 40x 30 | 114.5 | 70 | 42 |
| 72340_ _ | 40 | 20x4 | 240 | 180 | 63 | 12 | 12 | $40^{H8}$ | 3 | M8 / 20 deep | M8/8 deep | 31.5 | 60 | 38 | 38 | 46 | 160 | 90 | 62 |
| 72350_ _ | 50 | 20x4 | 288 | 206 | 73 | 12 | 12 | $40^{H8}$ | 2 | M8 / 30 deep | M8/8 deep | 36.5 | 72 | 38 | 38 | 46 | 184 | 100 | 62 |
| 72360_ _ | 60 | 24x5 | 320 | 240 | 88 | 14 | 14 | $50^{H8}$ | 2 | M8 / 20 deep | M10/20 deep | 44 | 80 | 38 | 38 | 55 | 216 | 130 | 74 |
| 72380_ _ | 80 | 32x6 | 480 | 302 | 143 | 20 | 20 | $70^{H7}$ | 4.5 | M8 / 20 deep | M10/20 deep | 71.5 | 120 | 31.5 | 31.5 | 64 | – | 180 | 180 |

_ _ _ _ Total length = basic length + total travel [mm]

**Bearing:**
0 = spindle with slide bearing*
1 = spindle with ball bearing
2 = spindle with slide bearing* and carriage with slide bushing
3 = spindle with ball bearing and carriage with slide bushing

**Version:**
1 = 1 drive shaft at lefthand thread end
2 = 1 drive shaft at righthand thread end
3 = 2 drive shafts

* Type 18, 60 and 80 spindle only available with ball bearing
** G1 thread only available on spindle with ball bearing

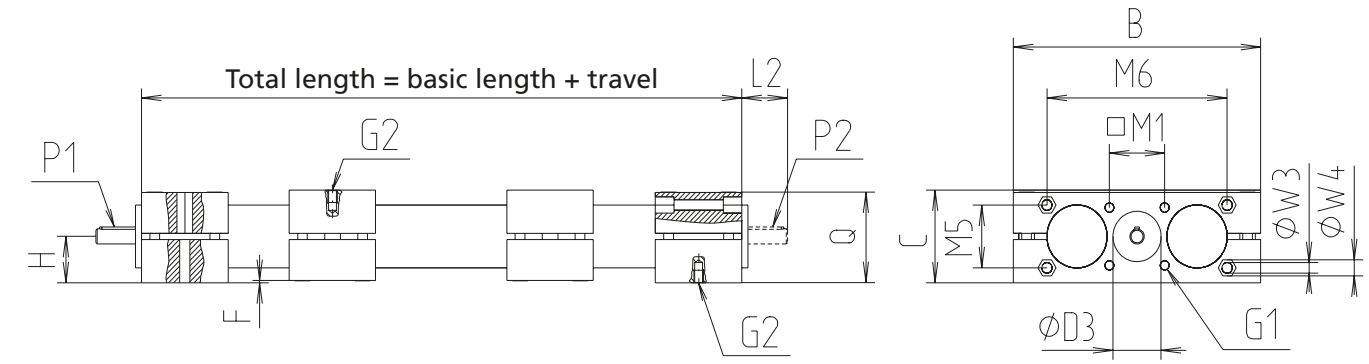


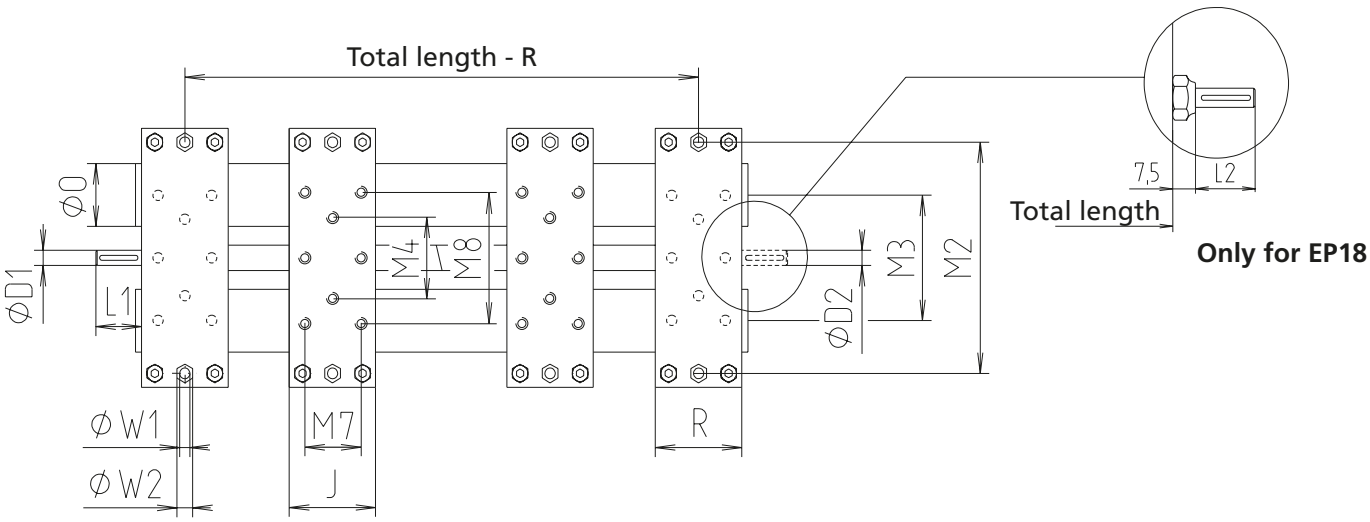


**Only for EP18**

[mm]

| M 5 | M 6 | M 7 | M 8 | O | P 1 | P 2 | Q | R | W 1 | W 2 | W 3 | W 4 | Max. travel | Mass [kg] | |
|---|---|---|---|---|---|---|---|---|---|---|---|---|---|---|---|
| | | | | | | | | | | | | | | Basic length | per 100 mm travel |
| – | – | – | – | 18 | 2x2x12 | 2x2x12 | 28 | 28 | 5.5 | A/F 8/6.5 deep | – | – | 1402 | 1.014 | 0.45 |
| 35 | 92 | – | – | 30 | 2x2x20 | 2x2x20 | 52 | 50 | 6.5 | A/F 10 / 26.5 deep | – | – | 1800 | 2.440 | 0.33 |
| 38 | 132 | – | – | 40 | 4x4x32 | 4x4x32 | 60 | 60 | 8.5 | A/F 13 / 32 deep | 6.5 | A/F 11 / 7 deep | 2760 | 5.585 | 0.90 |
| 50 | 150 | – | – | 50 | 4x4x32 | 4x4x32 | 72 | 72 | 8.5 | A/F 13 / 37.5 deep | 8.5 | A/F 13 / 8.5 deep | 2712 | 8.633 | 1.10 |
| 60 | 185 | – | – | 60 | 5x5x32 | 5x5x32 | 86 | 80 | 10.5 | A/F 17 / 44.5 deep | 8.5 | A/F 13 / 8.5 deep | 2680 | 18.182 | 1.63 |
| – | – | 80 | 180 | 80 | 6x6x22 | 6x6x22 | 138.5 | 120 | – | – | – | – | 2520 | 48.480 | 3.47 |

# EP – Versions

**Order information:**

- Please specify total travel when placing an order
- Corrosion-protected units available on request
- Second free-running carriage available on request
- Bellows version available as optional

**Version** ■ ***Split* screw**



Type 18-60 (image similar)

Type 80



Righthand thread

Righthand thread

| Code No. | Type | Spindle | Basic length | B | C | D 1 | D 2 | D 3 | F | G 1** | G 2 | H | J | L 1 | L 2 | M 1 | M 2 | M 3 | M 4 |
|---|---|---|---|---|---|---|---|---|---|---|---|---|---|---|---|---|---|---|---|
| 724183 _ | 18 | 10x2 | 146 | 82 | 29 | 6 | 6 | $16^{H7}$ | 1 | – | M5 / 5 tief | 14.5 | 28 | 17 | 17 | – | 68 | 40 | 18 |
| 724303 _ | 30 | 14x3 | 250 | 130 | 54 | 8 | 8 | $30^{H8}$ | 2 | M6 / 12 deep | M6 / 9 deep | 27 | 50 | 26 | 26 | 40x30 | 114.5 | 70 | 42 |
| 724403 _ | 40 | 20x4 | 300 | 180 | 63 | 12 | 12 | $40^{H8}$ | 3 | M8 / 20 deep | M8 / 8 deep | 31.5 | 60 | 38 | 38 | 46 | 160 | 90 | 62 |
| 724503 _ | 50 | 20x4 | 360 | 206 | 73 | 12 | 12 | $40^{H8}$ | 2 | M8 / 30 deep | M8 / 8 deep | 36.5 | 72 | 38 | 38 | 46 | 184 | 100 | 62 |
| 724603 _ | 60 | 24x5 | 400 | 240 | 88 | 14 | 14 | $50^{H8}$ | 2 | M8 / 20 deep | M10/10 deep | 44 | 80 | 38 | 38 | 55 | 216 | 130 | 74 |
| 724803 _ | 80 | 32x6 | 600 | 302 | 143 | 20 | 20 | $70^{H7}$ | 4.5 | M8 / 20 deep | M10/20 deep | 71.5 | 120 | 31.5 | 31.5 | 64 | – | 180 | 180 |

_ _ _ _ Total length = basic length + total travel [mm]

**Bearing:**
1 = spindle with ball bearing and carriage without slide bushing
3 = spindle with ball bearing and carriage with slide bushing

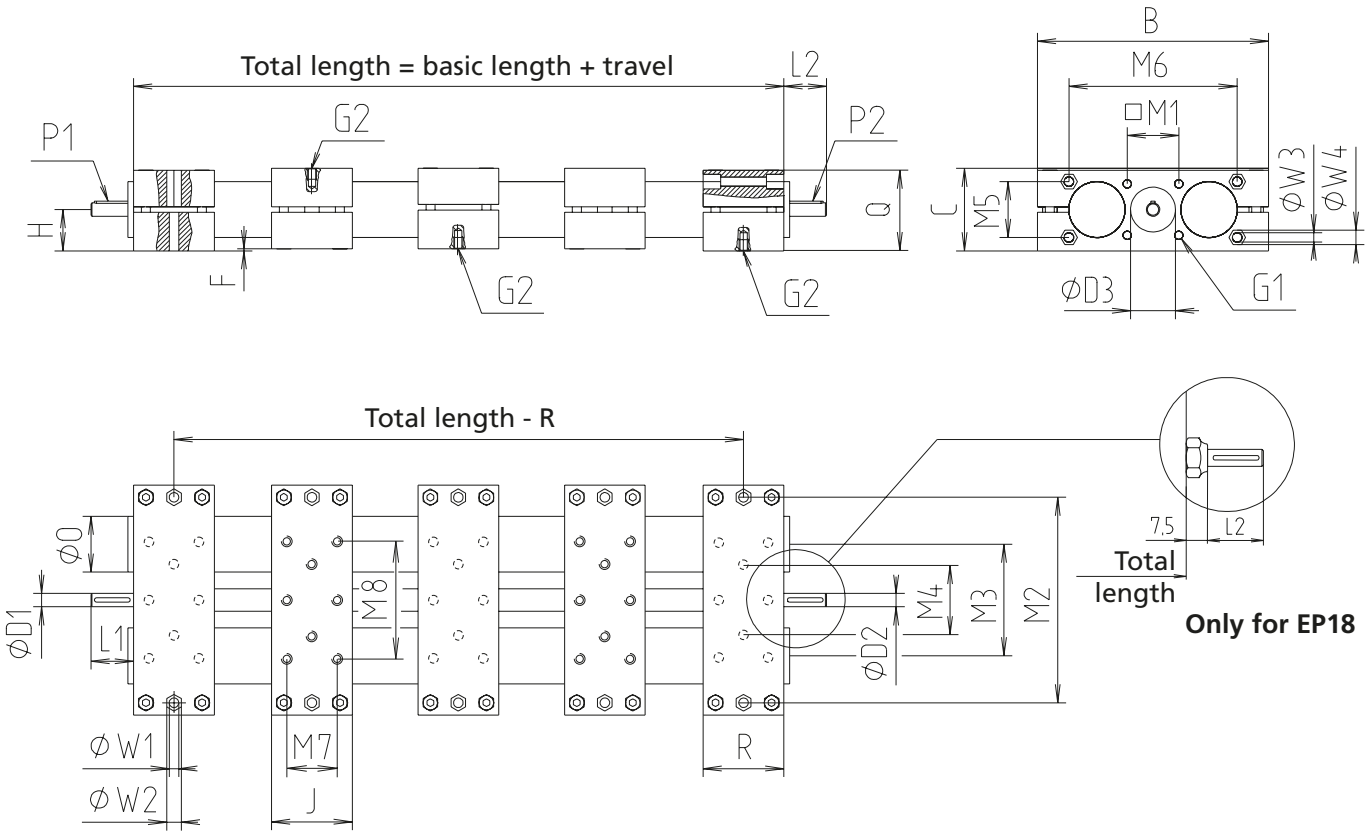


[mm]

| M 5 | M 6 | M 7 | M 8 | O | P 1 | P 2 | Q | R | W 1 | W 2 | W 3 | W 4 | Max. travel/end | Mass [kg] | |
|---|---|---|---|---|---|---|---|---|---|---|---|---|---|---|---|
| | | | | | | | | | | | | | | Basic length | per 100 mm travel |
| – | – | – | – | 18 | 2 x 2 x 12 | 2 x 2 x 12 | 28 | 28 | 5.5 | A/F 8/6.5 deep | – | – | 927 | 1.245 | 0.45 |
| 35 | 92 | – | – | 30 | 2 x 2 x 20 | 2 x 2 x 20 | 52 | 50 | 6.5 | A/F 10/26.5 deep | – | – | 1375 | 2.645 | 0.33 |
| 38 | 132 | – | – | 40 | 4x4x32 | 4x4x32 | 60 | 60 | 8.5 | A/F 13/32 deep | 6.5 | A/F 11/7 deep | 1350 | 8.020 | 0.90 |
| 50 | 150 | – | – | 50 | 4 x 4 x 32 | 4 x 4 x 32 | 72 | 72 | 8.5 | A/F 13/37.5 deep | 8.5 | A/F 13/8.5 deep | 1320 | 12.760 | 1.10 |
| 60 | 185 | – | – | 60 | 5 x 5 x 32 | 5 x 5 x 32 | 86 | 80 | 10.5 | A/F 17/44.5 deep | 8.5 | A/F 13/8.5 deep | 1300 | 22.532 | 1.63 |
| – | – | 80 | 180 | 80 | 6 x 6 x 20 | 6 x 6 x 20 | 138.5 | 120 | – | – | – | – | 1200 | 60.110 | 3.47 |

# EPX – Versions

**Order information:**

- Corrosion-protected units available on request
- Second free-running carriage available on request
- Bellows version available as optional

**Version** ■ **Right *or* lefthand thread**



Type 18-60 (image similar)

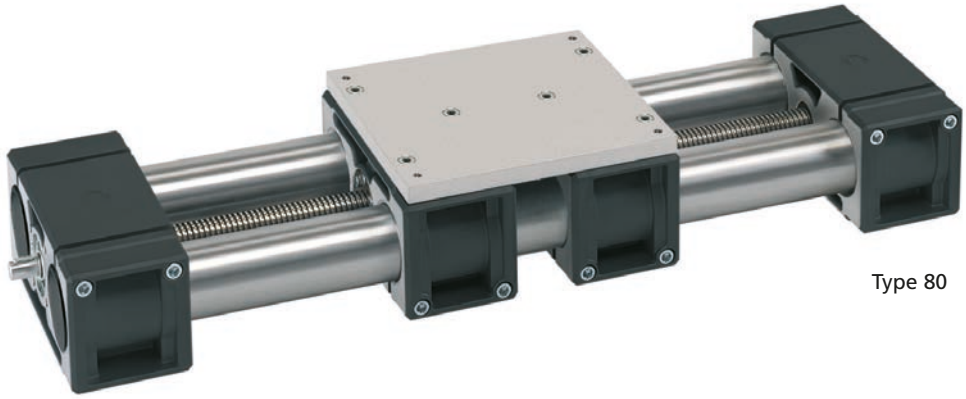

Type 80

| Code No. | Type | Spindle | Basic length | B | C | D 1 | D 2 | D 3 | F | G 1** | G 2 | G 3 | H 1 | H 2 | J | L 1 | L 2 | M 1 | M 2 | M 3 | M 4 |
|---|---|---|---|---|---|---|---|---|---|---|---|---|---|---|---|---|---|---|---|---|---|
| 72 _ 181 _ | 18 | 10 x 2 | 139 | 82 | 37 | 6 | – | $16^{H7}$ | 1 | – | M6 | M5/5 deep | 14.5 | 8 | 80 | 17 | – | – | 68 | 40 | 18 |
| 72 _ 183 _ | 18 | | | | | | 6 | | | | | | | | | | 17 | | | | |
| 72 _ 301 _ | 30 | 14 x 3 | 230 | 130 | 64 | 8 | – | $30^{H8}$ | 2 | M6/12 deep | M6 | M6/9 deep | 27 | 10 | 130 | 26 | – | 40 x 30 | 114.5 | 70 | 42 |
| 72 _ 303 _ | 30 | | | | | | 8 | | | | | | | | | | 26 | | | | |
| 72 _ 401 _ | 40 | 20 x 4 | 300 | 180 | 75 | 12 | – | $40^{H8}$ | 3 | M8 / 20 deep | M8 | M8 / 8 deep | 31.5 | 12 | 180 | 38 | – | 46 | 160 | 90 | 62 |
| 72 _ 403 _ | 40 | | | | | | 12 | | | | | | | | | | 38 | | | | |
| 72 _ 501 _ | 50 | 20 x 4 | 350 | 206 | 88 | 12 | – | $40^{H8}$ | 2 | M8/30 deep | M8 | M8/8 deep | 36.5 | 15 | 206 | 38 | – | 46 | 184 | 100 | 62 |
| 72 _ 503 _ | 50 | | | | | | 12 | | | | | | | | | | 38 | | | | |
| 72 _ 601 _ | 60 | 24 x 5 | 400 | 240 | 103 | 14 | – | $50^{H8}$ | 2 | M8/20 deep | M10 | M10/10 deep | 44 | 15 | 240 | 38 | – | 55 | 216 | 130 | 74 |
| 72 _ 603 _ | 60 | | | | | | 14 | | | | | | | | | | 38 | | | | |
| 72 _ 801 _ | 80 | 32 x 6 | 550 | 302 | 162 | 20 | – | $70^{H7}$ | 4.5 | M8/20 deep | M10 | M10/20 deep | 71.5 | 19 | 310 | 31.5 | – | 64 | – | 180 | 180 |
| 72 _ 803 _ | 80 | | | | | | 20 | | | | | | | | | | 31.5 | | | | |

_ _ _ _ Total length = basic length + travel [mm]

**Bearing:**
0 = spindle with slide bearing*
1 = spindle with ball bearing
2 = spindle with slide bearing* and carriage with slide bushing
3 = spindle with ball bearing and carriage with slide bushing

**Version:**
5 = righthand thread
6 = lefthand thread

* Type 18, 60 and 80 spindle only available with ball bearing
** G1 thread only available on spindle with ball bearing

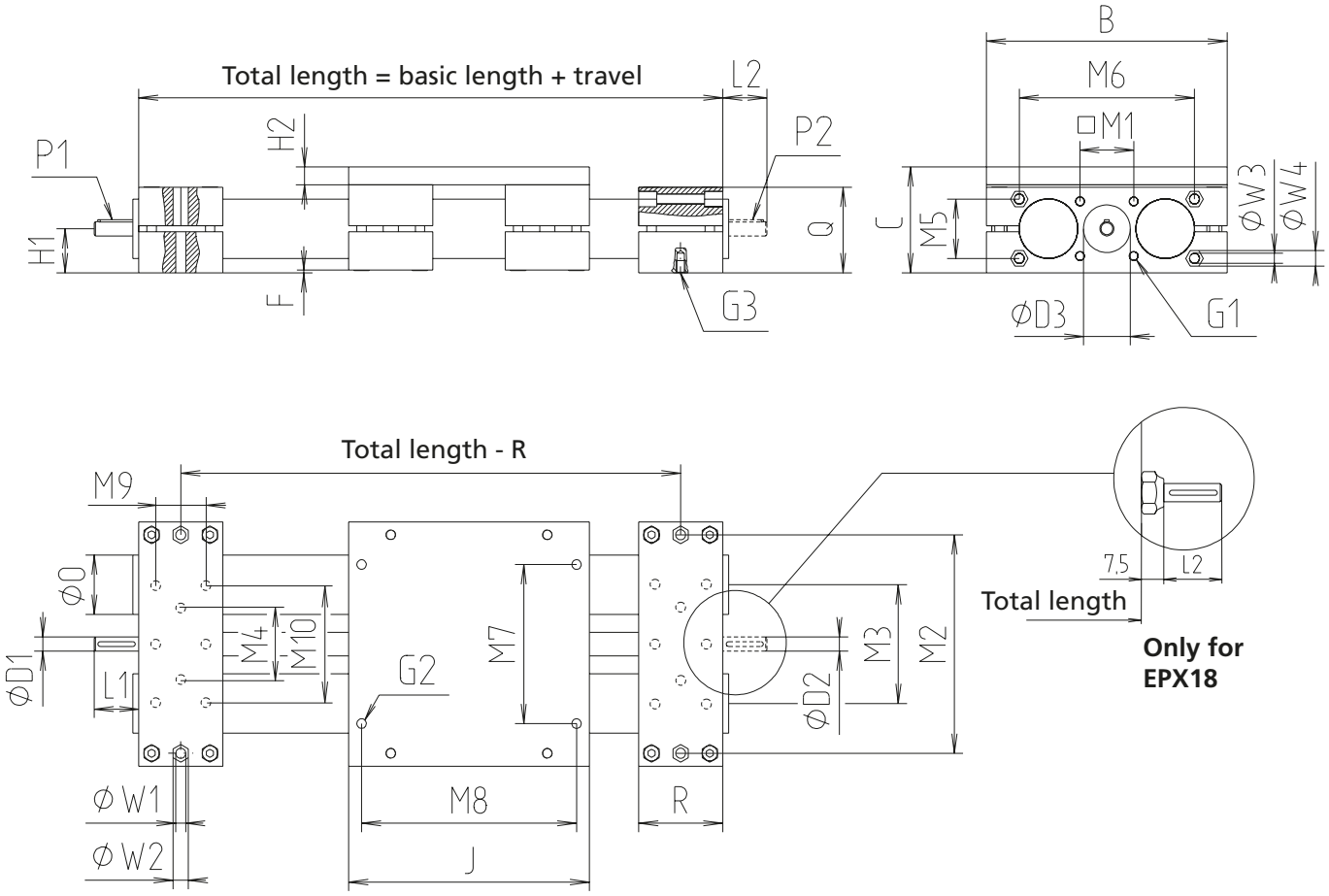


[mm]

| M 5 | M 6 | M 7 | M 8 | M 9 | M 10 | O | P 1 | P 2 | Q | R | W 1 | W 2 | W 3 | W 4 | Max. travel | Mass [kg] | |
|---|---|---|---|---|---|---|---|---|---|---|---|---|---|---|---|---|---|
| | | | | | | | | | | | | | | | | Basic length | per 100 mm travel |
| – | – | 56 | 28 | – | – | 18 | 2 x 2 x 12 | – | 28 | 28 | 5.5 | A/F 8/6.5 deep | – | – | 1044 | 1.261 | 0.45 |
| | | | | | | | | 2 x 2 x 12 | | | | | | | 1027 | 1.265 | 0.45 |
| 35 | 92 | 80 | 114 | – | – | 30 | 2 x 2 x 20 | – | 52 | 50 | 6.5 | A/F 10/26.5 deep | – | – | 1344 | 3.519 | 0.33 |
| | | | | | | | | 2 x 2 x 20 | | | | | | | 1318 | 3.529 | 0.33 |
| 38 | 132 | 120 | 160 | – | – | 40 | 4 x 4 x 32 | – | 60 | 60 | 8.5 | A/F 13/32 deep | 6.5 | A/F 11 / 7 deep | 2700 | 8.105 | 0.90 |
| | | | | | | | | 4 x 4 x 32 | | | | | | | 2700 | 8.140 | 0.90 |
| 50 | 150 | 134 | 184 | – | – | 50 | 4 x 4 x 32 | – | 72 | 72 | 8.5 | A/F 13/37.5 deep | 8.5 | A/F 13/8.5 deep | 2650 | 12.525 | 1.10 |
| | | | | | | | | 4 x 4 x 32 | | | | | | | 2650 | 12.560 | 1.10 |
| 60 | 185 | 160 | 216 | – | – | 60 | 5 x 5 x 32 | – | 86 | 80 | 10.5 | A/F 17/44.5 deep | 8.5 | A/F 13/8.5 deep | 2600 | 21.426 | 1.63 |
| | | | | | | | | 5 x 5 x 32 | | | | | | | 2600 | 21.472 | 1.63 |
| – | – | 250 | 270 | 80 | 180 | 80 | 6 x 6 x 20 | – | 138.5 | 120 | – | – | – | – | 2450 | 54.760 | 3.47 |
| | | | | | | | | 6 x 6 x 20 | | | | | | | 2450 | 54.860 | 3.47 |

# EPX – Versions

**Order information:**

- Please specify total travel when placing an order
- Corrosion-protected units available on request
- Second free-running carriage available on request
- Bellows version available as optional

**Version** ■ **Right *and* lefthand thread**

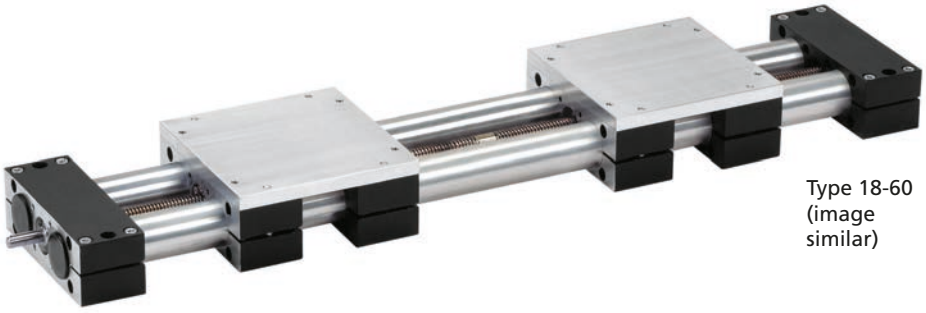

Type 18-60 (image similar)

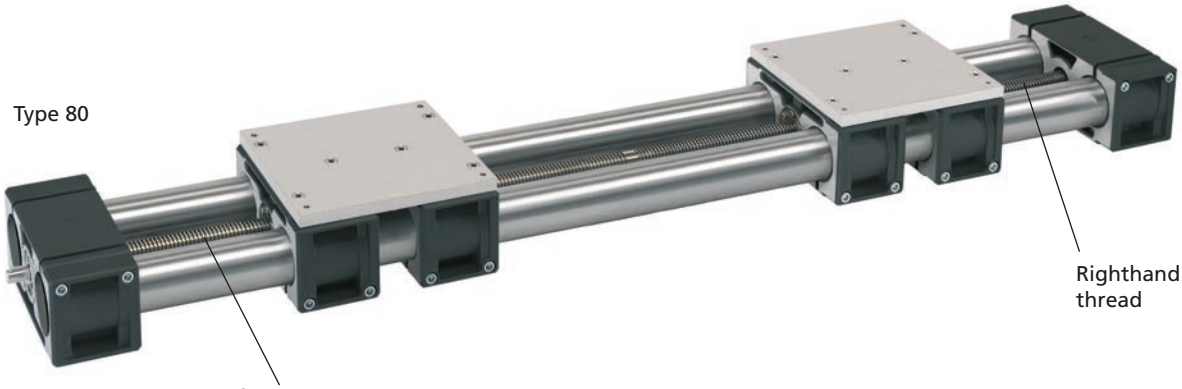

Type 80

Righthand thread

Lefthand thread (shaft end L1)

| Code No. | Type | Spindle | Basic length | B | C | D 1 | D 2 | D 3 | F | G 1** | G 2 | G 3 | H 1 | H 2 | J | L 1 | L 2 | M 1 | M 2 | M 3 | M 4 |
|---|---|---|---|---|---|---|---|---|---|---|---|---|---|---|---|---|---|---|---|---|---|
| 72718_ _ | 18 | 10 x 2 | 222 | 82 | 37 | 6 | 6 | $16^{H7}$ | 1 | – | M6 | M5/5 deep | 14.5 | 8 | 80 | 17 | 17 | – | 68 | 40 | 18 |
| 72730_ _ | 30 | 14 x 3 | 360 | 130 | 64 | 8 | 8 | $30^{H8}$ | 2 | M6/12 deep | M6 | M6/9 deep | 27 | 10 | 130 | 26 | 26 | 40 x 30 | 114.5 | 70 | 42 |
| 72740_ _ | 40 | 20 x 4 | 480 | 180 | 75 | 12 | 12 | $40^{H8}$ | 3 | M8/20 deep | M8 | M8 / 8 deep | 31.5 | 12 | 180 | 38 | 38 | 46 | 160 | 90 | 62 |
| 72750_ _ | 50 | 20 x 4 | 556 | 206 | 88 | 12 | 12 | $40^{H8}$ | 2 | M8/30 deep | M8 | M8/8 deep | 36.5 | 15 | 206 | 38 | 38 | 46 | 184 | 100 | 62 |
| 72760_ _ | 60 | 24 x 5 | 640 | 240 | 103 | 14 | 14 | $50^{H8}$ | 2 | M8/20 deep | M10 | M10/10 deep | 44 | 15 | 240 | 38 | 38 | 55 | 216 | 130 | 74 |
| 72780_ _ | 80 | 32 x 6 | 860 | 302 | 162 | 20 | 20 | $70^{H7}$ | 4.5 | M8/20 deep | M10 | M10/20 deep | 71.5 | 19 | 310 | 31.5 | 31.5 | 64 | – | 180 | 180 |

_ _ _ _ Total length = basic length + total travel [mm]

**Bearing:**
0 = spindle with slide bearing*
1 = spindle with ball bearing
2 = spindle with slide bearing* and carriage with slide bushing
3 = spindle with ball bearing and carriage with slide bushing

**Version:**
1 = 1 drive shaft at lefthand thread end
2 = 1 drive shaft at righthand thread end
3 = 2 drive shafts

* Type 18, 60 and 80 spindle only available with ball bearing
** G1 thread only available on spindle with ball bearing

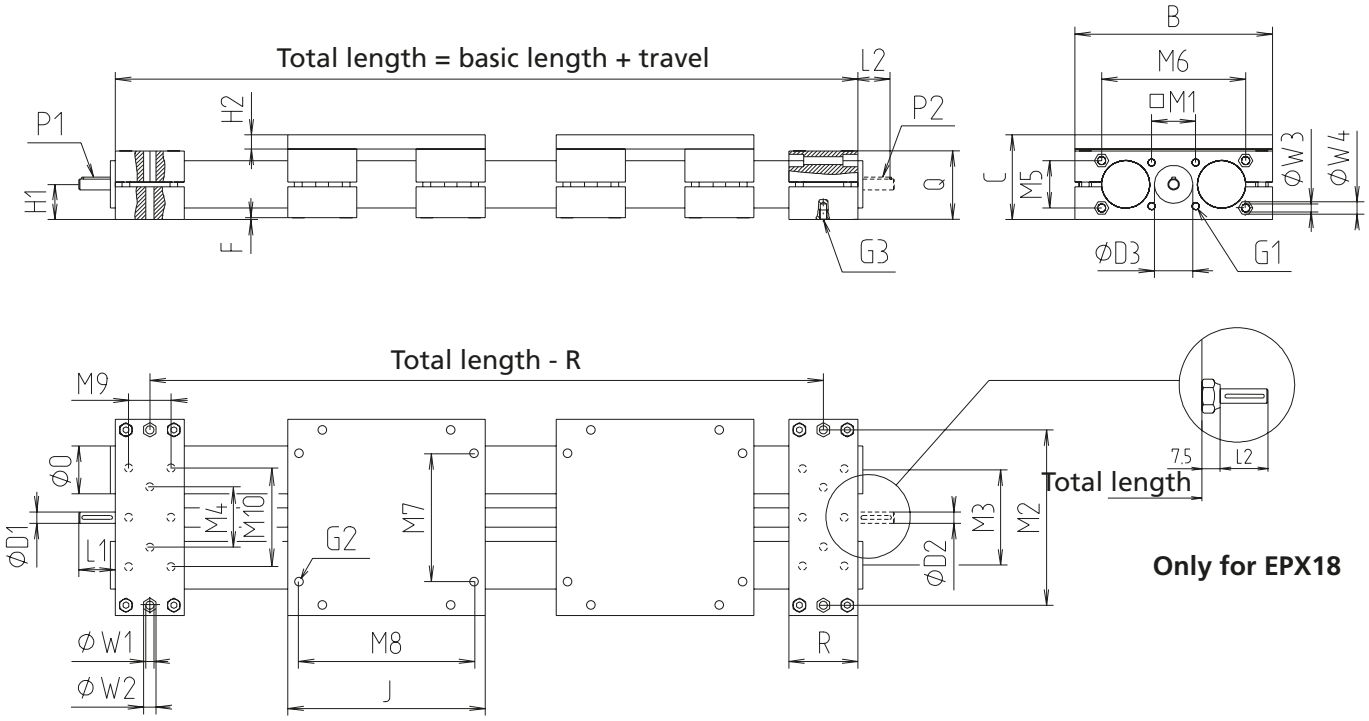


[mm]

| M 5 | M 6 | M 7 | M 8 | M 9 | M 10 | O | P 1 | P 2 | Q | R | W 1 | W 2 | W 3 | W 4 | Max. travel | Mass [kg] | |
|---|---|---|---|---|---|---|---|---|---|---|---|---|---|---|---|---|---|
| | | | | | | | | | | | | | | | | Basic length | per 100 mm travel |
| – | – | 56 | 28 | – | – | 18 | 2 x 2 x 12 | 2 x 2 x 12 | 28 | 28 | 5.5 | A/F 8/6.5 deep | – | – | 1298 | 1.983 | 0.45 |
| 35 | 92 | 80 | 114 | – | – | 30 | 2 x 2 x 20 | 2 x 2 x 20 | 52 | 50 | 6.5 | A/F 10/26.5 deep | – | – | 1640 | 5.588 | 0.33 |
| 38 | 132 | 120 | 160 | – | – | 40 | 4 x 4x32 | 4x4x32 | 60 | 60 | 6.5 | SW 13 / 32 deep | 6.5 | A/F 11 / 7 deep | 2520 | 13.030 | 0.90 |
| 50 | 150 | 134 | 184 | – | – | 50 | 4 x 4 x 32 | 4 x 4 x 32 | 72 | 72 | 8.5 | A/F 13/37.5 deep | 8.5 | A/F 13/8.5 deep | 2444 | 20.166 | 1.10 |
| 60 | 185 | 160 | 216 | – | – | 60 | 5 x 5 x 32 | 5 x 5 x 32 | 86 | 80 | 10.5 | A/F 17/44.5 deep | 8.5 | A/F 13/8.5 deep | 2360 | 34.244 | 1.63 |
| – | – | 250 | 270 | 80 | 180 | 80 | 6 x 6 x 20 | 6 x 6 x 20 | 138.5 | 120 | – | – | – | – | 2140 | 86.070 | 3.47 |

# EPX – Versions

**Order information:**

- Please specify total travel when placing an order
- Corrosion-protected units available on request
- Second free-running carriage available on request
- Bellows version available as optional

**Version** ■ *Split* screw



Type 18-60 (image similar)

Type 80

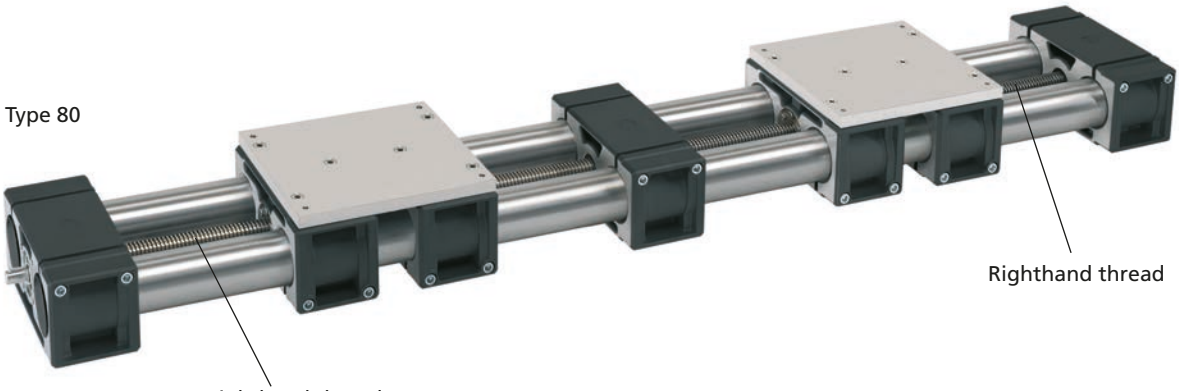

Righthand thread

Righthand thread

| Code No. | Type | Spindle | Basic length | B | C | D 1 | D 2 | D 3 | F | G 1** | G 2 | G 3 | H 1 | H 2 | J | L 1 | L 2 | M 1 | M 2 | M 3 | M 4 |
|---|---|---|---|---|---|---|---|---|---|---|---|---|---|---|---|---|---|---|---|---|---|
| 728183_ | 18 | 10 x 2 | 250 | 82 | 37 | 6 | 6 | $16^{H7}$ | 1 | – | M6 | M5/5 deep | 14.5 | 8 | 80 | 17 | 17 | – | 68 | 40 | 18 |
| 728303_ | 30 | 14 x 3 | 410 | 130 | 64 | 8 | 8 | $30^{H8}$ | 2 | M6/12 deep | M6 | M6/9 deep | 27 | 10 | 130 | 26 | 26 | 40 x 30 | 114.5 | 70 | 42 |
| 728403_ | 40 | 20 x 4 | 540 | 180 | 75 | 12 | 12 | $40^{H8}$ | 3 | M8/20 deep | M8 | M8 / 8 deep | 31.5 | 12 | 180 | 38 | 38 | 46 | 160 | 90 | 62 |
| 728503_ | 50 | 20 x 4 | 628 | 206 | 88 | 12 | 12 | $40^{H8}$ | 2 | M8/30 deep | M8 | M8/8 deep | 36.5 | 15 | 206 | 38 | 38 | 46 | 184 | 100 | 62 |
| 728603_ | 60 | 24 x 5 | 720 | 240 | 103 | 14 | 14 | $50^{H8}$ | 2 | M8/20 deep | M10 | M10/10 deep | 44 | 15 | 240 | 38 | 38 | 55 | 216 | 130 | 74 |
| 728803_ | 80 | 32 x 6 | 980 | 302 | 162 | 20 | 20 | $70^{H7}$ | 4.5 | M8/20 deep | M10 | M10/20 deep | 71.5 | 19 | 310 | 31.5 | 31.5 | 64 | – | 180 | 180 |

_ _ _ _ Total length = basic length + total travel [mm]

**Bearing:**
1 = spindle with ball bearing and carriage without slide bushing
3 = spindle with ball bearing and carriage with slide bushing

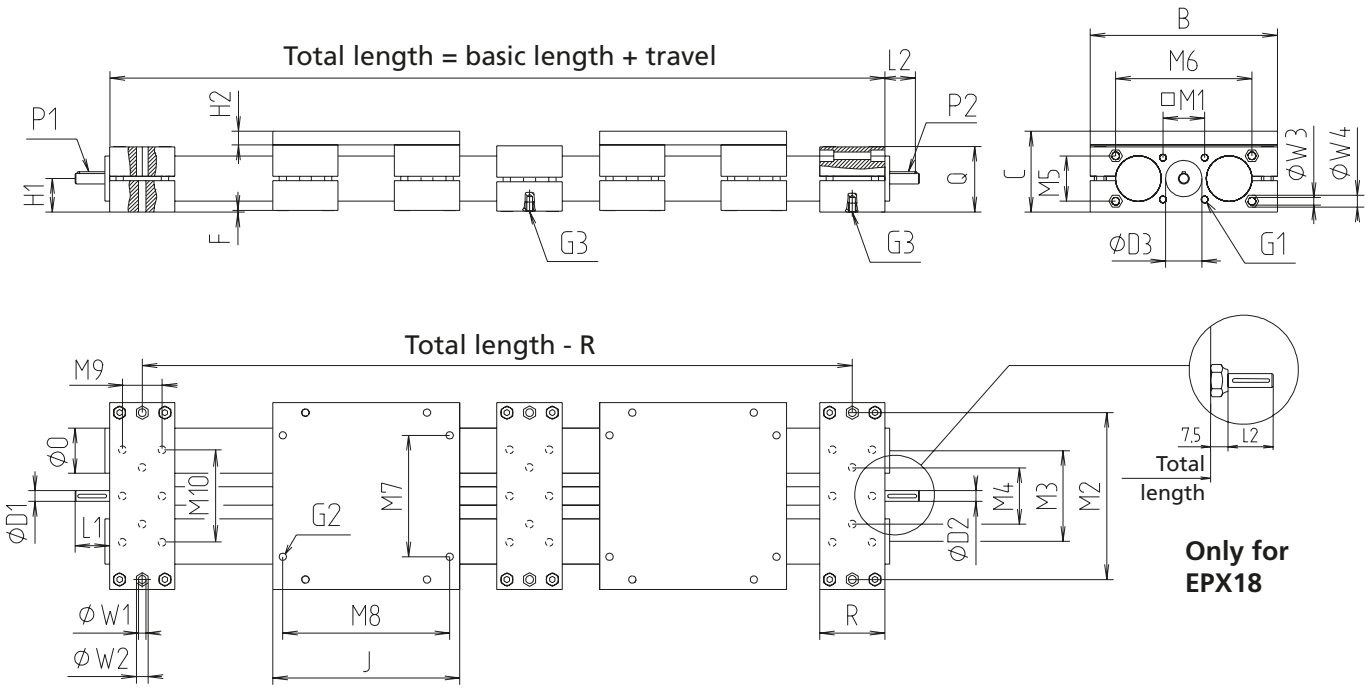


[mm]

| M 5 | M 6 | M 7 | M 8 | M 9 | M 10 | O | P 1 | P 2 | Q | R | W 1 | W 2 | W 3 | W 4 | Max. travel/ end | Mass [kg] | |
|---|---|---|---|---|---|---|---|---|---|---|---|---|---|---|---|---|---|
| | | | | | | | | | | | | | | | | Basic length | per 100 mm travel |
| – | – | 56 | 28 | – | – | 18 | 2 x 2 x 12 | 2 x 2 x 12 | 28 | 28 | 5.5 | A/F 8/6.5 deep | – | – | 875 | 2.215 | 0.45 |
| 35 | 92 | 80 | 114 | – | – | 30 | 2 x 2 x 20 | 2 x 2 x 20 | 52 | 50 | 6.5 | A/F 10/26.5 deep | – | – | 1295 | 6.247 | 0.33 |
| 38 | 132 | 120 | 160 | – | – | 40 | 4 x4 x32 | 4 x 4 x 32 | 60 | 60 | 8.5 | AF 13/ 32 deep | 6.5 | SW 11 / 7 deep | 1230 | 14.620 | 0.90 |
| 50 | 150 | 134 | 184 | – | – | 50 | 4 x 4 x 32 | 4 x 4 x 32 | 72 | 72 | 8.5 | A/F 13/37.5 deep | 8.5 | A/F 13/8.5 deep | 1186 | 22.608 | 1.10 |
| 60 | 185 | 160 | 216 | – | – | 60 | 5 x 5 x 32 | 5 x 5 x 32 | 86 | 80 | 10.5 | A/F 17/44.5 deep | 8.5 | A/F 13/8.5 deep | 1140 | 38.548 | 1.63 |
| – | – | 250 | 270 | 80 | 180 | 80 | 6 x 6 x 20 | 6 x 6 x 20 | 138.5 | 120 | – | – | – | – | 1010 | 97.700 | 3.47 |

## Handwheel

**Material:** Die-cast aluminium
black powder-coating



Diam. 140-200



Diam. 60-100

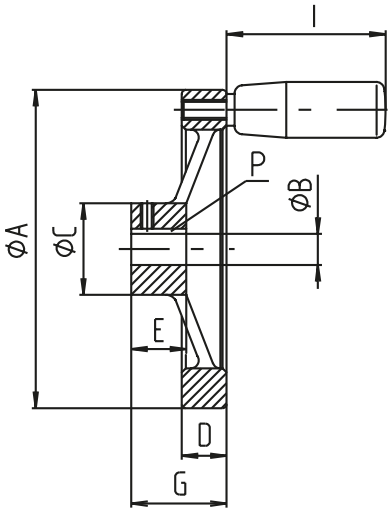


[mm]

| Code No. | Type | Diam. A | B | C | D | E | G | P | I |
|---|---|---|---|---|---|---|---|---|---|
| 90901 | 18 | 60 | 6 | 18 | 13 | 16 | 22 | 2 x 2 | 28 |
| 90913 | 30 | 100 | 8 | 28 | 14 | 17 | 30 | 2 x 2 | 52 |
| 90915 | 40-50 | 100 | 12 | 28 | 14 | 17 | 30 | 4 x 4 | 52 |
| 90905 | 40-50 | 140 | 12 | 36 | 16.5 | 19.5 | 36 | 4 x 4 | 66 |
| 90906 | 60 | 140 | 14 | 36 | 16.5 | 19.5 | 36 | 5 x 5 | 66 |
| 90918 | 60 | 160 | 14 | 36 | 18 | 20 | 39 | 5 x 5 | 80 |
| 90929 | 80 | 200 | 20 | 42 | 20.5 | 24 | 45 | 6 x 6 | 80 |

## Chain wheel

■ Other sizes on request

**Material:** Steel 500 N/mm$^2$, min.



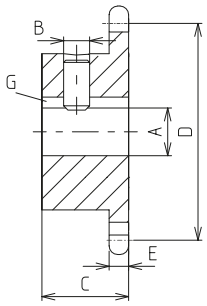


[mm]

| Code No. | Type | A | B | C | D | E | G | No. of teeth | Size |
|---|---|---|---|---|---|---|---|---|---|
| 91703 | 30 | 8 | M6 | 18 | 41.1 | 4.5 | 2 x 2 | 10 | 1/2 x 3/16" |
| 91704 | 40 | 12 | M6 | 20 | 53 | 4.5 | 4 x 4 | 13 | 1/2 x 3/16" |
| 91705 | 50 | 12 | M6 | 20 | 61 | 4.5 | 4 x 4 | 15 | 1/2 x 3/16" |
| 91706 | 60 | 14 | M6 | 25 | 85 | 4.5 | 5 x 5 | 21 | 1/2 x 3/16" |
| 91708 | 80 | 20 | M6 | 25 | 85 | 4.5 | 6 x 6 | 21 | 1/2 x 3/16" |

## HTD timing-belt pulley

- Suitable for maintenance-free continuous operation
- Excellent accuracy and zero backlash during change of direction
- Can be clamped on feather key

**Material:** Steel



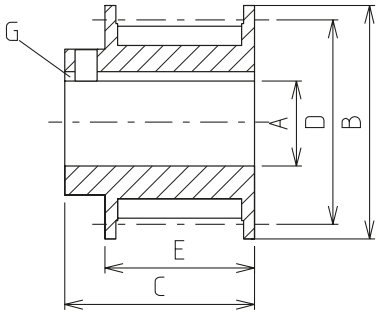


[mm]

| Code No. | Type | A | B | C | D | E | G | Pull force | Pitch |
|---|---|---|---|---|---|---|---|---|---|
| 92103 | 30 | 8 | 23 | 20 | 19.09 | 14.5 | 2 x 2 | 220 N | 5 |
| 92105 | 40/50 | 12 | 32 | 26 | 28.65 | 20.5 | 4 x 4 | 330 N | 5 |
| 92106 | 60 | 14 | 32 | 26 | 28.65 | 20.5 | 5 x 5 | 330 N | 5 |

## Bevel gear set

- Straight toothed
- Pressure angle 20°
- Shaft angle 90°
- Crowned tooth flanks



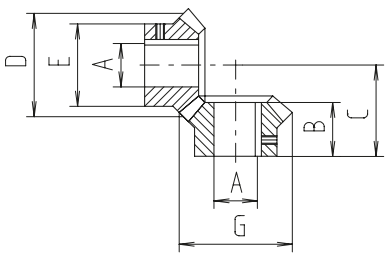


[mm]

| Code No. | Type | A | B | C | D | E | G | No. of teeth | Module |
|---|---|---|---|---|---|---|---|---|---|
| 91603 | Set 30 | 8 | 15 | 24 | 24 | 18 | 26.11 | 16 | 1.5 |
| 91623 | Single component 30 | 8 | 15 | 24 | 24 | 18 | 26.11 | 16 | 1.5 |
| 91604 | Set 40 | 12 | 19 | 31 | 32 | 26 | 35 | 16 | 2 |
| 91664 | Single component 40 | 12 | 19 | 31 | 32 | 26 | 35 | 16 | 2 |
| 91605 | Set 50 | 12 | 22 | 37 | 40 | 32 | 44 | 16 | 2.5 |
| 91625 | Single component 50 | 12 | 22 | 37 | 40 | 32 | 44 | 16 | 2.5 |
| 91606 | Set 60 | 14 | 22 | 37 | 40 | 32 | 44 | 16 | 2.5 |
| 91666 | Single component 60 | 14 | 22 | 37 | 40 | 32 | 44 | 16 | 2.5 |

## Angular drive

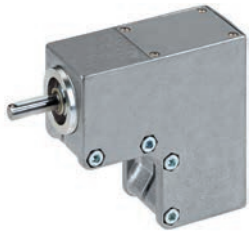

- If angular drives are fitted, the linear units are delivered exclusively with ball bearings

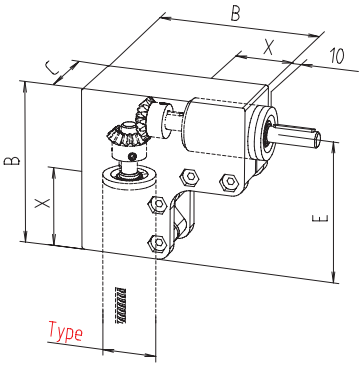


**Scope of delivery:** Housing, bevel gear set and transmission unit

**Material:** Angular drive housing made of die cast aluminium
Steel parts galvanised,
shaft bright

Power transmission of bevel gears

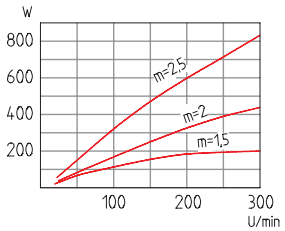


[mm]

| Code No. | Type | i | Module | No. of teeth | Dia-meter | B | C | E | X |
|---|---|---|---|---|---|---|---|---|---|
| 91523 | 30 | 1:1 | 1.5 | 16 | 8 | 96 | 42 | 75 | 43 |
| 91504 | 40 | 1:1 | 2 | 16 | 12 | 128 | 54 | 100 | 55 |
| 91555 | 50 | 1:1 | 2.5 | 16 | 12 | 148 | 65 | 115 | 68 |
| 91506 | 60 | 1:1 | 2.5 | 16 | 14 | 170 | 80 | 130 | 80 |

## Adaptor for EP(X) angular drive

- Connection adaptor for mounting angular drives on EP units
- Spindle with special shaft required
- If angular drives are fitted, the linear units are delivered exclusively with ball bearings

**Material:**
AlMgSi, black anodised



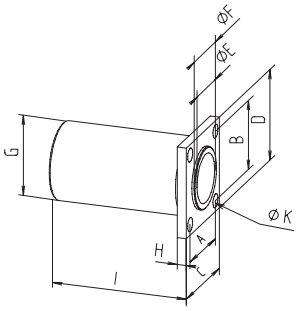


[mm]

| Code No. | Type | A | B | C | D | E | F | G | H | I | O |
|---|---|---|---|---|---|---|---|---|---|---|---|
| 91533 | 30 | 30 | 40 | 50 | 50 | 22 | 30 | 30 | 5 | 55 | 6.6 |
| 91514 | 40 | 46 | 46 | 60 | 60 | 32 | 40 | 40 | 6 | 83 | 9 |
| 91525 | 50 | 46 | 46 | 60 | 60 | 32 | 40 | 50 | 6 | 98 | 9 |
| 91516 | 60 | 55 | 55 | 70 | 70 | 42 | 50 | 60 | 8 | 98 | 9 |

## Selection table - motor adaptor/coupling

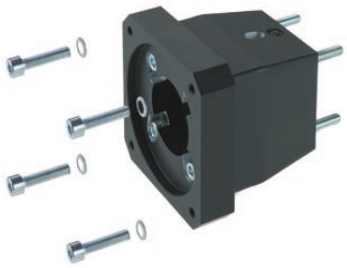

| Type | Servo motors without gear | | | Three-phase motor | |
|---|---|---|---|---|---|
| | RK-AC 118 | RK-AC 240 | RK-AC 470 | 90/120W | 180/250 W |
| EP(X) 30 | 949200 | – | – | 949623 | – |
| | 911430 0811 | – | – | 911940 0812 | – |
| EP(X) 40 | 949201 | 949221 | – | 949614 | 949414 |
| | 911430 1112 | 911430 1214 | 911940 1220 | 911430 1212 | 911430 1214 |
| EP(X) 50 | 949202 | 949222 | – | 949614 | 949414 |
| | 911430 1112 | 911430 1214 | – | 911430 1212 | 911430 1214 |
| EP(X) 60 | 949203 | 949223 | 949239 | – | 949616 |
| | 911430 1114 | 911940 1414 | 911940 1419 | – | 911940 1414 |
| EP(X) 80 | 949901 | 949903 | 949905 | – | 949909 |
| | 911940 1120 | 9111940 1420 | 911940 1920 | – | 911940 1420 |

↓

Code No. Motor adaptor:
**949903**

Code No. Coupling with specification of shaft diameter
1st end = 14 mm
2nd end = 20 mm:
**9111940 1420**

**Note:**
For further details on motor versions, please refer to the chapter "Motors and controls"
For dimensions and order data for motor adaptor and coupling, please refer to next page

## Motor adaptor

- Simple assembly
- Exact fit due to centering shoulders

**Material:** Aluminium, black

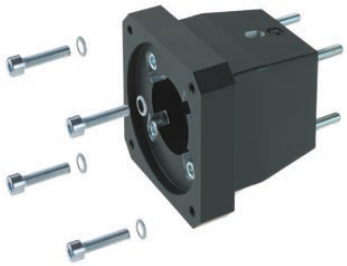

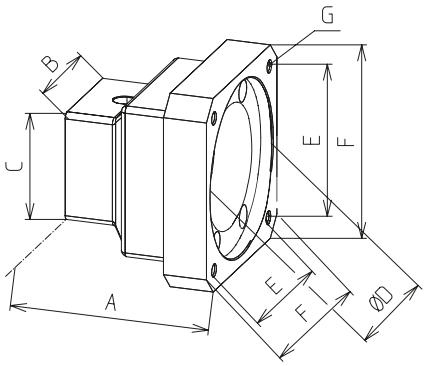


[mm]

| Code No. | Type | A | B | C | D | E | F | G |
|---|---|---|---|---|---|---|---|---|
| 949200 | 30 | 64 | 53.5 | 53.5 | 60 | 53 | 70 | M5 |
| 949247 | 30 | 66 | 53.5 | 53.5 | 73 | 70 | 90 | M6 |
| 949275 | 30 | 71 | 53.5 | 53.5 | 60 | 53 | 70 | M5 |
| 949623 | 30 | 64 | 53.5 | 53.5 | 50 | 65 | 80 | M5 |
| 949201 | 40 | 74 | 60 | 60 | 60 | 53 | 70 | M5 |
| 949276 | 40 | 83 | 60 | 60 | 60 | 53 | 70 | M5 |
| 949221 | 40 | 83 | 60 | 60 | 80 | 70.7 | 90 | M6 |
| 949296 | 40 | 100 | 60 | 60 | 80 | 70.7 | 90 | M6 |
| 949248 | 40 | 83 | 60 | 60 | 73 | 70 | 90 | M6 |
| 949614 | 40 | 83 | 60 | 60 | 50 | 46 | 80 | M5 |
| 949414 | 40 | 83 | 60 | 60 | 80 | 100 | Ø120 | Ø6.6 |
| 949202 | 50 | 74 | 60 | 60 | 60 | 53 | 70 | M5 |
| 949277 | 50 | 83 | 60 | 60 | 60 | 53 | 70 | M5 |
| 949222 | 50 | 83 | 60 | 60 | 80 | 70.7 | 90 | M6 |
| 949249 | 50 | 83 | 60 | 60 | 73 | 70 | 90 | M6 |
| 949614 | 50 | 83 | 60 | 60 | 50 | 46 | 80 | M5 |
| 949414 | 50 | 83 | 60 | 60 | 80 | 100 | Ø120 | Ø6.6 |
| 949203 | 60 | 74 | 80 | 80 | 60 | 53 | 70 | M5 |
| 949278 | 60 | 86 | 80 | 80 | 60 | 53 | 70 | M5 |
| 949223 | 60 | 86 | 80 | 80 | 80 | 70.7 | 90 | M6 |
| 949239 | 60 | 96 | 80 | 80 | 95 | 81.3 | 115 | M8 |
| 949250 | 60 | 81 | 80 | 80 | 73 | 70 | 90 | M6 |
| 949616 | 60 | 86 | 80 | 80 | 80 | 100 | Ø120 | Ø6.6 |
| 949901 | 80 | 74 | 80 | 80 | 60 | 53 | 70 | M5 |
| 949902 | 80 | 81 | 80 | 80 | 60 | 53 | 70 | M5 |
| 949903 | 80 | 79 | 80 | 80 | 80 | 70.7 | 90 | M6 |
| 949905 | 80 | 86 | 80 | 80 | 80 | 81.3 | 115 | M8 |
| 949907 | 80 | 79 | 80 | 80 | 73 | 70 | 90 | M6 |
| 949909 | 80 | 81 | 80 | 80 | 80 | 100 | Ø120 | Ø6.6 |

## Coupling

- Small size
- Shaft connection without back-lash
- Maintenance-free
- Easy plug-in assembly

**Material:** Hub – aluminium
Spider ring – polyurethane

To ensure the smooth running of the coupling, a clearance of **D + 3 mm** is required.



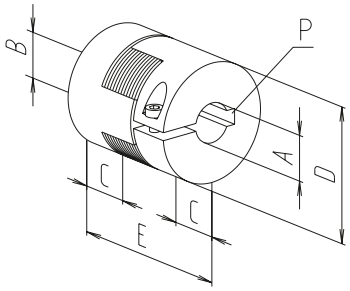


[mm]

| Code No. | A | B | C | D | E | P | Torque [Nm] with feather key | Torque [Nm] without feather key |
|---|---|---|---|---|---|---|---|---|
| 9109200612 | 6 | 12 | 10 | 22 | 30 | 2x2 / 4x4 | 5 | 3 |
| 9109200895 | 8 | 9,5 | 10 | 20 | 30 | 2x2 / – | 5 | 3 |
| 9114300811 | 8 | 11 | 11 | 30 | 35 | 2x2 / 4x4 | 12 | 6 |
| 9114300816 | 8 | 16 | 11 | 30 | 35 | 2x2 / 5x5 | 12 | 6 |
| 9114309512 | 9,5 | 12 | 11 | 30 | 35 | – / 4x4 | 12 | 6 |
| 9114309514 | 9,5 | 14 | 11 | 30 | 35 | – / 5x5 | 12 | 6 |
| 9114301112 | 11 | 12 | 11 | 30 | 35 | 4x4 / 4x4 | 12 | 6 |
| 9114301114 | 11 | 14 | 11 | 30 | 35 | 4x4 / 5x5 | 12 | 6 |
| 9114301212 | 12 | 12 | 11 | 30 | 35 | 4x4 / 4x4 | 12 | 6 |
| 9114301214 | 12 | 14 | 11 | 30 | 35 | 4x4 / 5x5 | 12 | 6 |
| 9114301216 | 12 | 16 | 11 | 30 | 35 | 4x4 / 5x5 | 12 | 6 |
| 9119400812 | 08 | 12 | 25 | 40 | 65 | 2x2 / 4x4 | 17 | 10 |
| 9119401414 | 14 | 14 | 25 | 40 | 65 | 5x5 / 5x5 | 17 | 10 |
| 9119401416 | 14 | 16 | 25 | 40 | 65 | 5x5 / 6x6 | 17 | 10 |
| 9119401419 | 14 | 19 | 25 | 40 | 65 | 5x5 / 6x6 | 17 | 10 |
| 9119401620 | 16 | 20 | 25 | 40 | 65 | 6x6 / 6x6 | 17 | 10 |
| 9119401920 | 19 | 20 | 25 | 40 | 65 | 6x6 / 6x6 | 17 | 10 |

# EP(X) – Position determination

## Scale

- Self-adhesive
- 4 mm high figures

**Material:**
Steel band, plastic-coated

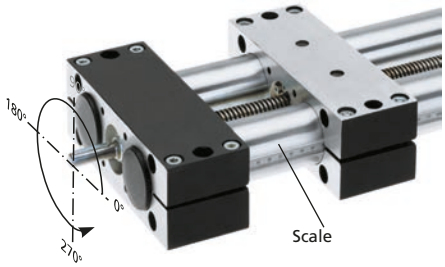


Image shows scale to be read from left to right. Standard mounting at 0° (180° mounting of the left guiding tube, to be read from right to left)

[mm]

| Code No. | Type | Can be read from | Length | B | Version |
|---|---|---|---|---|---|
| 92040 | 30* | left to right | 0-1000 | 8 | fitted |
| 92041 | 40-60* | right to left | 0-1000 | 10 | fitted |
| 92042 | | left to right | 0-1000 | 10 | fitted |
| 92045 | | left to right | 0-2000 | 10 | fitted |
| 92046 | | right to left | 0-2000 | 10 | fitted |

* In the case of Type 18, a scale can be engraved in the guiding tube if required Please specify the position on the tube if relevant.
Type 80 available on request

## Positioning indicator



Installation position: horizontal



Installation position: vertical

- Permitted ambient temperature +80°C
- Figure height 6 mm
- Indication accuracy ± 0.1 mm
- If positioning indicators are fitted, the linear units are delivered exclusively with ball bearings

**Material:** Housing polyamide 6
Orange RAL 2004,
Steel parts, corrosion-protected

**Scope of delivery:** Positioning indicator, clamping ring, shaft extension and fastenings

**Note:** "rising" and "falling" versions refer to the clockwise rotation of the drive shaft.

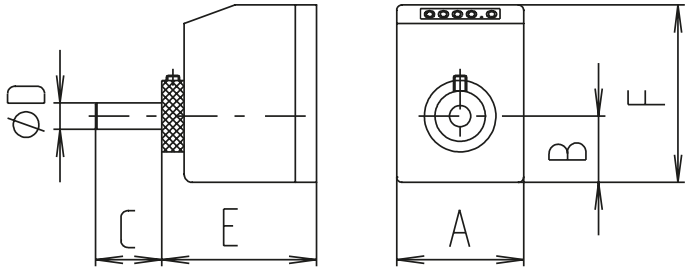


[mm]

| Type | Installation position | Connection | Code No. | Version | Code No. | Version* | A | B | C | D | E | F |
|---|---|---|---|---|---|---|---|---|---|---|---|---|
| 18 | Horizontal | Directly to EP(X) or on angular drive | 91061 | 2 mm rising | 91012 | 4 mm rising | 48 | 29 | 17 | 6 | 60 | 67 |
| 18 | | | 91071 | 2 mm falling | 910137 | 4 mm falling | 48 | 29 | 17 | 6 | 60 | 67 |
| 18 | Vertical | | 91081 | 2 mm rising | 910138 | 4 mm rising | 48 | 29 | 17 | 6 | 60 | 67 |
| 18 | | | 91091 | 2 mm falling | 910139 | 4 mm falling | 48 | 29 | 17 | 6 | 60 | 67 |
| 30 | Horizontal | Directly to EP(X) or on angular drive | 91043 | 3 mm rising | 91010 | 6 mm rising | 48 | 25 | 18 | 8 | 59 | 67 |
| 30 | | | 91053 | 3 mm falling | 91029 | 6 mm falling | 48 | 25 | 18 | 8 | 59 | 67 |
| 30 | Vertical | | 91063 | 3 mm rising | 91020 | 6 mm rising | 48 | 25 | 18 | 8 | 59 | 67 |
| 30 | | | 91073 | 3 mm falling | 91019 | 6 mm falling | 48 | 25 | 18 | 8 | 59 | 67 |
| 40 | Horizontal | Directly to EP(X) or on angular drive | 91004 | 4 mm rising | 91030 | 8 mm rising | 48 | 25 | 38 | 12 | 59 | 67 |
| 40 | | | 91014 | 4 mm falling | 91039 | 8 mm falling | 48 | 25 | 38 | 12 | 59 | 67 |
| 40 | Vertical | | 91024 | 4 mm rising | 91040 | 8 mm rising | 48 | 25 | 38 | 12 | 59 | 67 |
| 40 | | | 91034 | 4 mm falling | 91041 | 8 mm falling | 48 | 25 | 38 | 12 | 59 | 67 |
| 50 | Horizontal | Directly to EP(X) or on angular drive | 91045 | 4 mm rising | 91046 | 8 mm rising | 48 | 25 | 38 | 12 | 59 | 75 |
| 50 | | | 91055 | 4 mm falling | 91047 | 8 mm falling | 48 | 25 | 38 | 12 | 59 | 75 |
| 50 | Vertical | | 91065 | 4 mm rising | 91048 | 8 mm rising | 48 | 25 | 38 | 12 | 59 | 75 |
| 50 | | | 91075 | 4 mm falling | 91049 | 8 mm falling | 48 | 25 | 38 | 12 | 59 | 75 |
| 60 | Horizontal | Only directly to EP(X) | 910120 | 5 mm rising | 910124 | 10 mm rising | 48 | 25 | 38 | 14 | 60 | 81 |
| 60 | | | 910121 | 5 mm falling | 910125 | 10 mm falling | 48 | 25 | 38 | 14 | 60 | 81 |
| 60 | Vertical | | 910122 | 5 mm rising | 910126 | 10 mm rising | 48 | 25 | 38 | 14 | 60 | 81 |
| 60 | | | 910123 | 5 mm falling | 910127 | 10 mm falling | 48 | 25 | 38 | 14 | 60 | 81 |
| 60 | Horizontal | Only on angular drive | 91006 | 5 mm rising | 91056 | 10 mm rising | 48 | 25 | 38 | 14 | 60 | 81 |
| 60 | | | 91016 | 5 mm falling | 91057 | 10 mm falling | 48 | 25 | 38 | 14 | 60 | 81 |
| 60 | Vertical | | 91026 | 5 mm rising | 91058 | 10 mm rising | 48 | 25 | 38 | 14 | 60 | 81 |
| 60 | | | 91036 | 5 mm falling | 91059 | 10 mm falling | 48 | 25 | 38 | 14 | 60 | 81 |
| 80 | Horizontal | Directly to EP(X) or on angular drive | 91110 | 6 mm rising | 910140 | 12 mm rising | 64 | 29 | 31 | 20 | 60 | 94 |
| 80 | | | 91111 | 6 mm falling | 910141 | 12 mm falling | 64 | 29 | 31 | 20 | 60 | 94 |
| 80 | Vertical | | 91112 | 6 mm rising | 910142 | 12 mm rising | 64 | 29 | 31 | 20 | 60 | 94 |
| 80 | | | 91113 | 6 mm falling | 910143 | 12 mm falling | 64 | 29 | 31 | 20 | 60 | 94 |

*Version with double lead e.g. for installation on righthand/ lefthand thread screws

## Holder for mechanical limit switch

- Limit switch can be moved and fixed axially

| Type | 18-60 | 80 |
|---|---|---|
| Max. voltage | 250 V AC | 230 V AC |
| Max. switching current | 6 A | 4 A |
| Max. starting current | 16 A | – |
| Operating frequency | Max. 6000/h | Max. 5000/h |
| Mechanical lifetime | 10 million switching cycles | 20 million switching cycles |
| Axis lever adjustment | locking at 10° increments | |
| Protection class | IP 65 | IP 67 |
| Ambient temperature | -30°C to +80°C | |

Type 18-60

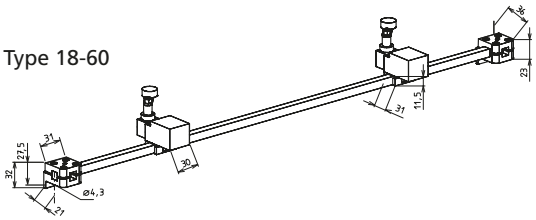


Type 80

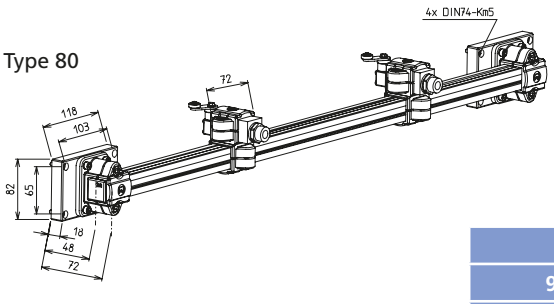


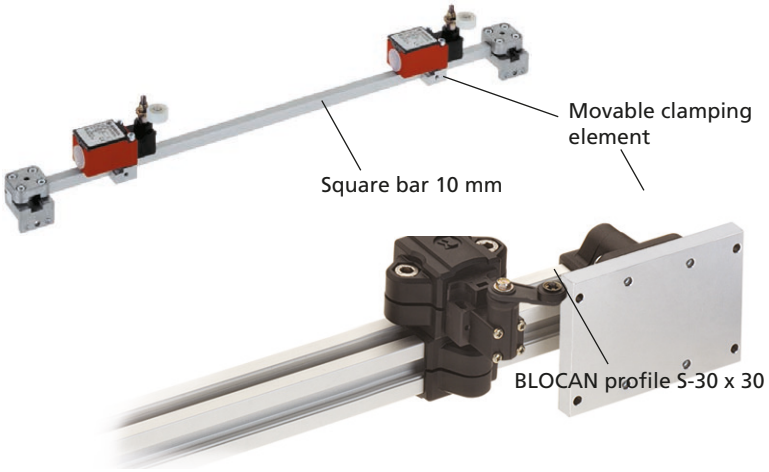


| Code No. | Type | Basic length | Version |
|---|---|---|---|
| 92961_ _ _ _ | 18-60 | 245 | with switch |
| 92962_ _ _ _ | 18-60 | 245 | without switch |
| 92933_ _ _ _ | 80 | 380 | with switch |
| 92934_ _ _ _ | 80 | 380 | without switch |

Total length of linear unit

## Mechanical limit switch



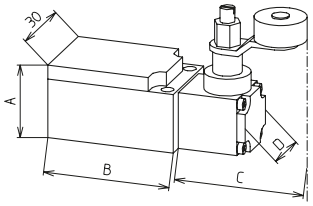


[mm]

| Code No. | Type | Switching function | A | B | C | D |
|---|---|---|---|---|---|---|
| 91905 | 18-60 | NC/NO | 26.5 | 45 | 45.5 | 21 |
| 91908 | 80 | NC/NO | 30 | 58.5 | 46 | 20 |
| 91907 | Clamping element 18-60 for limit switch | | | | | |
| 91904 | Clamping element 80 for limit switch | | | | | |

## Holder for inductive limit switch

- Limit switch can be moved and fixed axially

Type 18-60

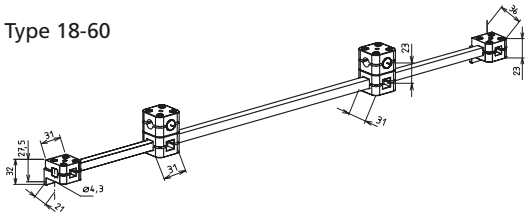

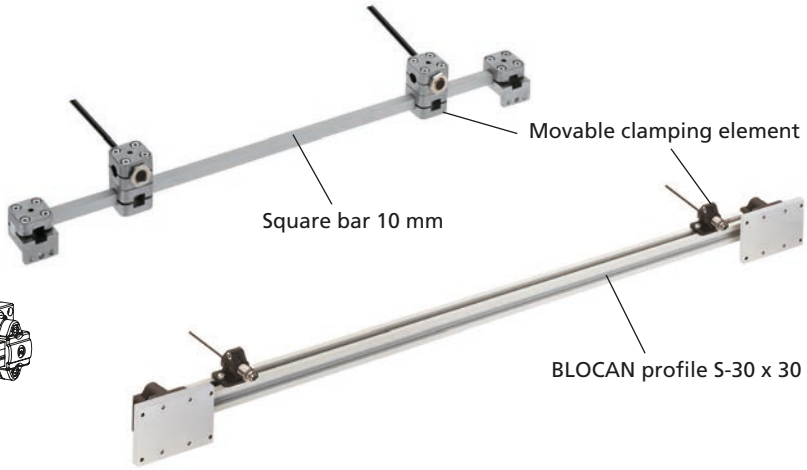


Type 80

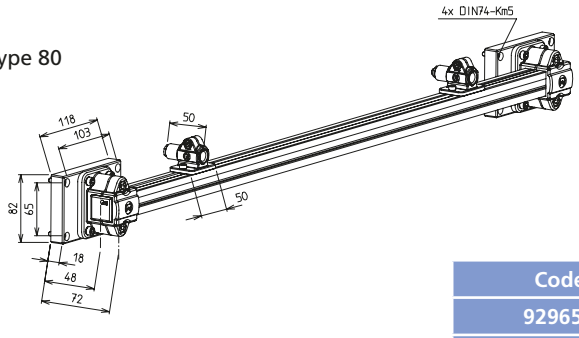


| Code No. | Type | Basic length | Version |
|---|---|---|---|
| 92965_ _ _ _ | 18-60 | 125 | without switch |
| 92932_ _ _ _ | 80 | 336 | without switch |

Total length of linear unit

## Inductive limit switch



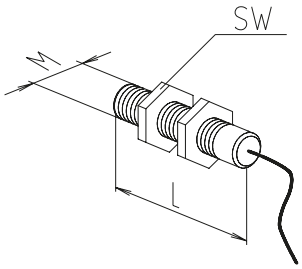


| Type | 18-60 | 80 |
|---|---|---|
| Voltage | 10 - 30 V DC | |
| Max. switching current | 200 mA | 150 mA |
| Operating distance | 4 mm for steel | 2 mm for steel |
| Protection class | IP 67 | |
| Ambient temperature | -25°C to +70°C | |
| Cable lengths | 2m | |

[mm]

| Code No. | Type | Switching function | L | M | Wrench size (SW) |
|---|---|---|---|---|---|
| 92825 | 18-60 | Changeover | 50 | 12x1 | 17 |
| 92826 | 80 | Changeover | 40 | 8x1 | 13 |
| 92802 | Clamping element 18-60 for limit switch | | | | |
| 92804 | Clamping element 80 for limit switch | | | | |

# EP(X)-II 30/40 tubular linear unit – Technical data

## The latest generation of EP(X)-II 30/40 twin tube units – compensates for high bending moments during hand and motor-driven adjustments

**Precise / plane mounting surface**
✓ Distortion-free installation

**Integrated spindle clamping**
✓ Manual force locking
spindle clamping optional

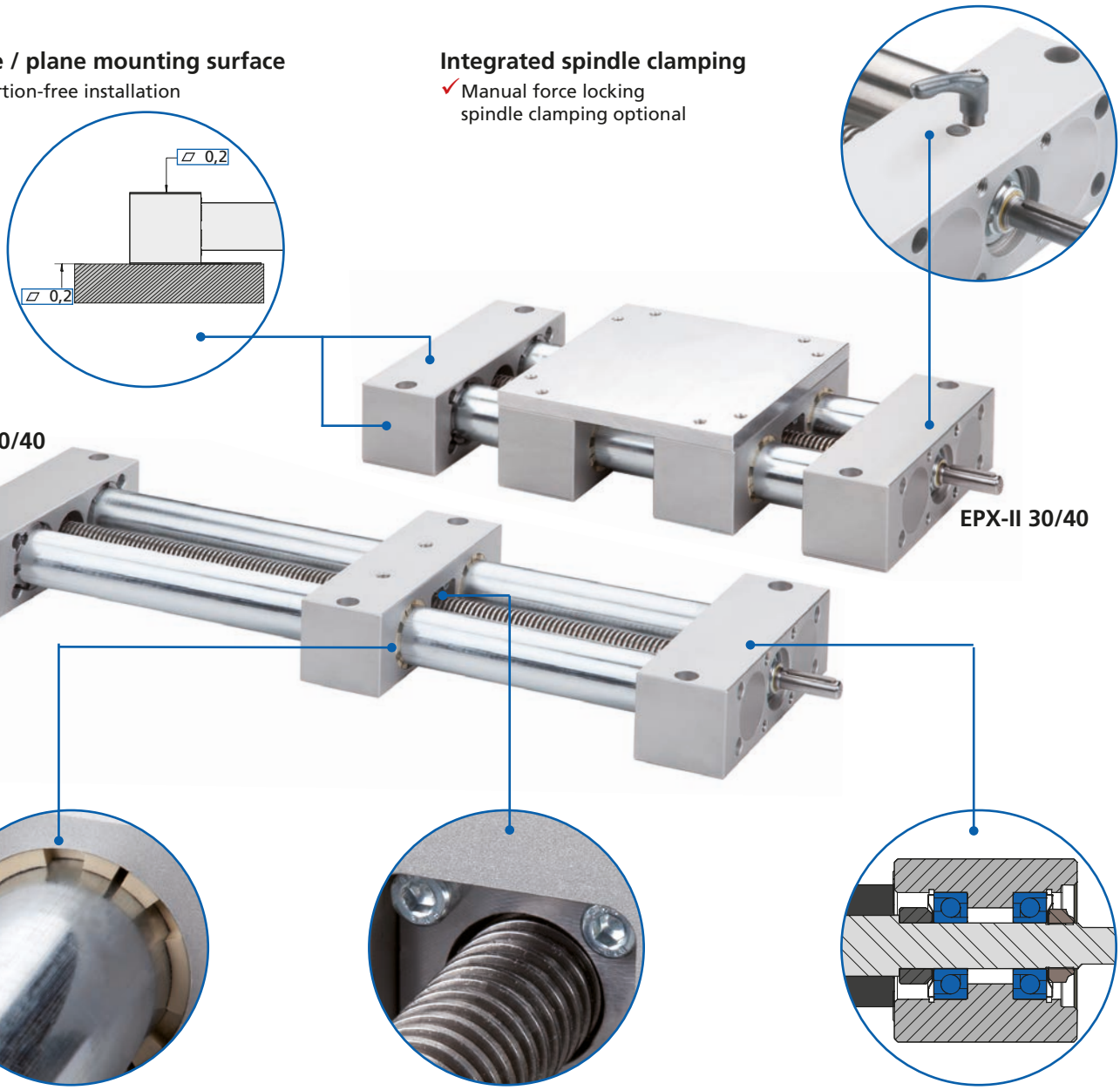


**Carriage with slide bushings as standard**
✓ Longer lifetime due sleeves made of high performance material

**New guide nut concept**
✓ Split nuts, simple replacement – no need to dismantle the linear unit
✓ Longer lifetime due to high performance materials

**Reduced axial play**
✓ Optimised lead screw with fixed bearing in end element

### Features:

- High moment capacity
- Version available with large fixing plate
- Identical connection sizes as previous version

### Versions – size 40

- EP-II 30/40
  Right or lefthand thread
  Right and lefthand thread
  Split Screw
- EPX-II 30/40
  Right or lefthand thread
  Right and lefthand thread
  Split Screw

### Options:

- Corrosion-protected units
- Second free moving
- Protect: with bellows and protection class IP 40
- Spindle clamping only at ball-screw spindle units

# EP(X)-II 30/40 tubular linear unit – Table of contents


## Properties/performance data

- General information / operating conditions . 112
- Load data ..... 113
- Geometric moments of inertia ..... 113

## Versions
(Dimensions, order numbers)

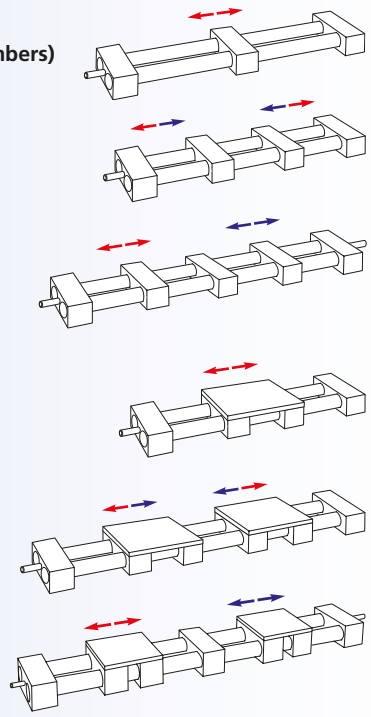

- EP-II 30/40 right or lefthand thread ..... 114 - 115
- EP-II 30/40 right and lefthand thread ... 116 - 117
- EP-II 30/40 split screw ..... 118 - 119
- EPX-II 30/40 right or lefthand thread ... 120 - 121
- EPX-II 30/40 right and lefthand thread. 122 - 123
- EPX-II 30/40 split screw ..... 124 - 125

## Accessories

**Drive**

- Handwheel ..... 126
- Chain wheel ..... 126
- Timing-belt pulley ..... 126
- Bevel gear set ..... 127
- Angle drive ..... 127
- Motor adapter / coupling ..... 128 - 129

**Position determination**

- Positioning indicator ..... 130
- Limit switch ..... 131

# EP(X)-II 30/40 tubular linear unit – Technical data

## General information / operating conditions

| | EP-II 30 | EPX-II 30 | EP-II 40 | EPX-II 40 |
|---|---|---|---|---|
| Guide | Slide guide | | | |
| Installation position | Any position | | | |
| Max. speed | 0.015 m/s (stroke independent) | | 0.02 m/s (stroke independent) | |
| Max. acceleration | 3 m/s² | | | |
| Repeatability | ± 0,1 mm | | | |
| Max. no-load torque | 0,6 Nm | 0,7 Nm | 0,7 Nm | 0,8 Nm |
| Drive | Trapezoidal screw, Ø 14, pitch 3 | | Trapezoidal screw, Ø 20, pitch 4 | |
| Lead accuracy | (± 0,1 / 300 mm) | | | |
| Duty cycle | S3, 30%, base 1h | | | |
| Ambient temperature | 0 to +60°C | | | |
| Protection class | Basic: no / Protect: IP 40 | | | |

## Static load data*

F Force [N]

M Moment [Nm]

I Geometric moment of inertia [$cm^4$]

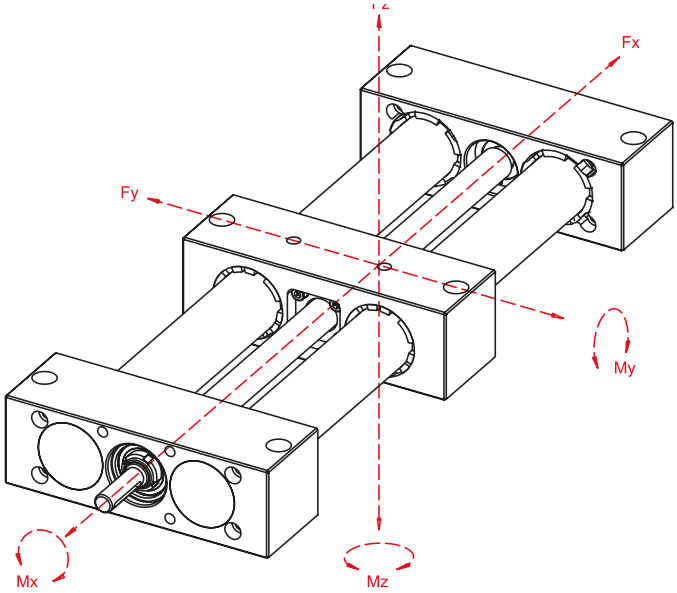


* with reference to carriage (deflection of guide element f = 0.5 mm, static, end elements supported)

| Type | Fx | Fy | | | Fz | | | Mx | My | Mz |
|---|---|---|---|---|---|---|---|---|---|---|
| Total length [mm] | 500 | 500 | 1000 | 1500 | 500 | 1000 | 1500 | | | |
| EP-II 30 | 800 | 1000 | 800 | 500 | 550 | 300 | 100 | 60 | 60 | 75 |
| EPX-II 30 | 800 | 1400 | 1200 | 700 | 650 | 450 | 200 | 80 | 110 | 140 |
| EP-II 40 | 1000 | 3500 | 2600 | 1300 | 2000 | 580 | 120 | 120 | 130 | 150 |
| EPX-II 40 | 1000 | 6000 | 3100 | 1800 | 2200 | 680 | 220 | 160 | 190 | 240 |

## Geometric moment of inertia

[$cm^4$]

| Type | Iy | Iz |
|---|---|---|
| EP(X)-II 30 | 3.47 | 46.57 |
| EP(X)-II 40 | 14.84 | 198.06 |

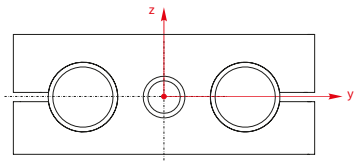

# EP-II 30/40 – Dimensions / ordering data

**Order information:**

- Corrosion-protected units available on request
- Second non driven carriage available on request
- Scale upon request
- Protect: version with bellows optional (IP 40)

**Version** ■ **Right *or* lefthand thread**



| Code No. | Type | Spindle | Basic length | B | C | D1 | D2 | D3 | F | G1 | G2 | H | J | L1 | L2 | M1 | M2 | M3 |
|---|---|---|---|---|---|---|---|---|---|---|---|---|---|---|---|---|---|---|
| 79_301 _ _ 1 _ A_ _ _ _ | 30 | Tr 14x3 | 150 | 130 | 54 | 8 | – | 30 H8 | 2 | M6 / 12 deep | M6 / 9 deep | 27 | 50 | 26 | – | 40x30 | 114.5 | 70 |
| 79_303 _ _ 1 _ A_ _ _ _ | | | | | | | 8 | | | | | | | | 26 | | | |
| 79_401 _ _ 1 _ A_ _ _ _ | 40 | Tr 20x4 | 180 | 180 | 63 | 12 | – | 40 H8 | 3 | M8 / 20 deep | M8 / 8 deep | 31.5 | 60 | 38 | – | 46 | 160 | 90 |
| 79_403 _ _ 1 _ A_ _ _ _ | | | | | | | 12 | | | | | | | | 38 | | | |

_ _ _ _ Total length = basic length + travel [mm] **(minimum travel 50 mm)**

A = standard
B = c/w angle drive on shaft end L1 (see page 127). (Only with spindle bearing ball bearing)

A = standard
B = c/w integrated spindle clamping (Only with spindle bearing ball bearing)

**Spindle bearing:**
1 = ball bearing
0 = slide bearing

**Spindle version:**
1 = righthand thread
2 = lefthand thread

Total length = basic length + travel

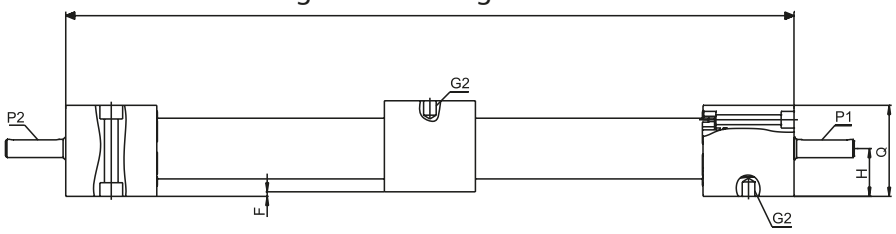


Total length – R

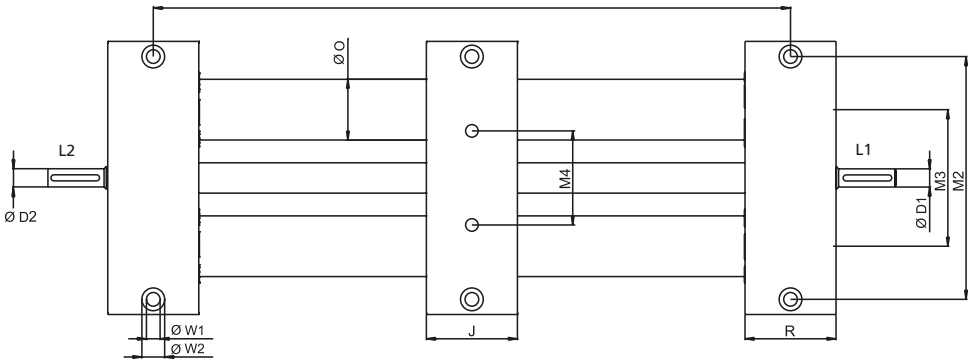


[mm]

| M4 | M5 | M6 | O | P1 | P2 | Q | R | W1 | W2 | W3 | W4 | Max. travel | Mass [kg] | |
|---|---|---|---|---|---|---|---|---|---|---|---|---|---|---|
| | | | | | | | | | | | | | Basic length | per 100 mm travel |
| 42 | – | – | 30 | 2x2x20 | – | 52 | 50 | 6.5 | 10 / 26.5 deep | – | – | 1424 | 2.6 | 0.4 |
| | | | | | 2x2x20 | | | | | | | 1398 | | |
| 62 | 38 | 132 | 40 | 4x4x32 | – | 60 | 60 | 9 | 15 / 9 deep | 6.5 | 11 / 8.5 deep | 2820 | 5.53 | 0.96 |
| | | | | | 4x4x32 | | | | | | | | | |

# EP-II 30/40 – Dimensions / ordering data

**Order information:**

- Please specify basic length and total travel when placing an order
- Corrosion-protected units available on request
- Second non driven carriage available on request
- Scale upon request
- Protect: version with bellows optional (IP 40)

**Version** ■ **Right *and* lefthand thread**

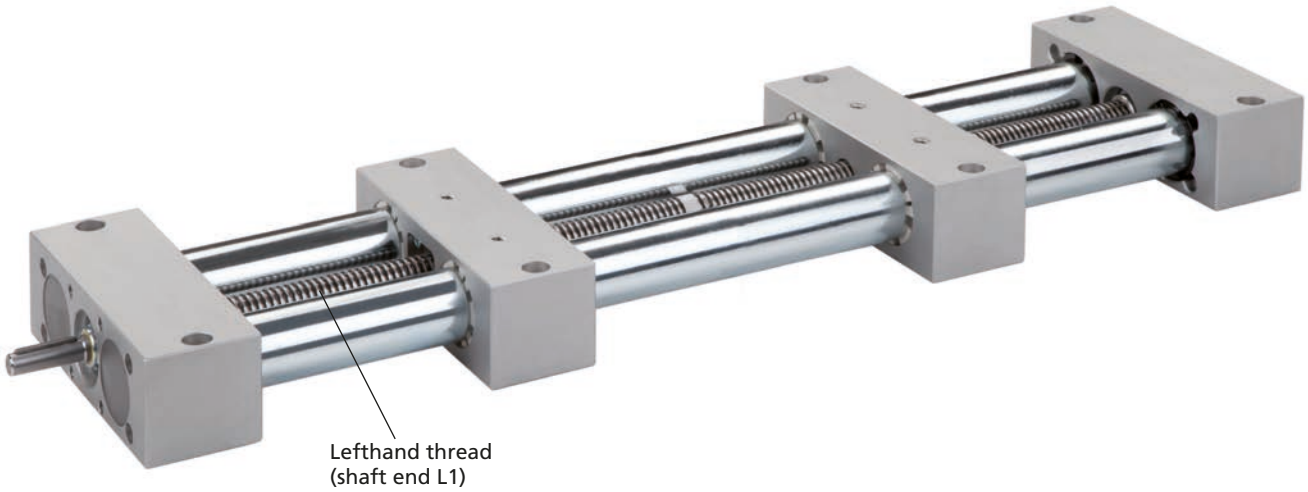


| Code No. | Type | Spindle | Basic length | B | C | D1 | D2 | D3 | F | G1 | G2 | H | J | L1 | L2 | M1 | M2 | M3 |
|---|---|---|---|---|---|---|---|---|---|---|---|---|---|---|---|---|---|---|
| 793301 _ _ 1 _ A_ _ _ _ | 30 | Tr 14x3 | 200 | 130 | 54 | 8 | – | 30 H8 | 2 | M6 / 12 deep | M6 / 9 deep | 27 | 50 | 26 | – | 40x30 | 114.5 | 70 |
| 793303 _ _ 1 _ A_ _ _ _ | | | | | | | 8 | | | | | | | | 26 | | | |
| 793401 _ _ 1 _ A_ _ _ _ | 40 | Tr 20x4 | 240 | 180 | 63 | 12 | – | 40 H8 | 3 | M8 / 20 deep | M8 / 8 deep | 31.5 | 60 | 38 | – | 46 | 160 | 90 |
| 793403 _ _ 1 _ A_ _ _ _ | | | | | | | 12 | | | | | | | | 38 | | | |

_ _ _ _ Total length = basic length + total travel [mm] **(minimum total travel 100 mm)**

A = standard
B = c/w angle drive on shaft end L1 (see page 127). (Only with spindle bearing ball bearing)

A = standard
B = c/w integrated spindle clamping (Only with spindle bearing ball bearing)

**Spindle bearing:**
1 = ball bearing
0 = slide bearing

Total length = basic length + travel

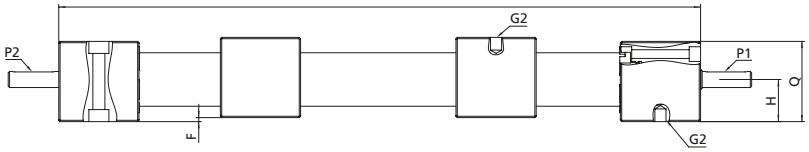


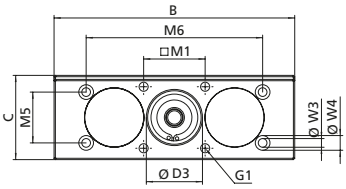


Total length – R

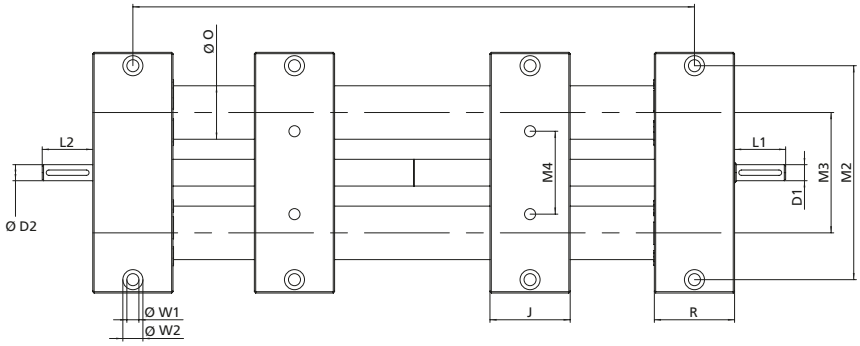


[mm]

| M4 | M5 | M6 | O | P1 | P2 | Q | R | W1 | W2 | W3 | W4 | Max. travel | Mass [kg] | |
|---|---|---|---|---|---|---|---|---|---|---|---|---|---|---|
| | | | | | | | | | | | | | Basic length | per 100 mm travel |
| 42 | – | – | 30 | 2x2x20 | –<br>2x2x20 | 52 | 50 | 6.5 | 10 / 26.5 deep | – | – | 1800 | 3.43 | 0.4 |
| 62 | 38 | 132 | 40 | 4x4x32 | –<br>4x4x32 | 60 | 60 | 9 | 15 / 9 deep | 6.5 | 11 / 8.5 deep | 2760 | 7.73 | 0.96 |

# EP-II 30/40 – Dimensions / ordering data

**Order information:**

- Please specify basic length and total travel when placing an order
- Corrosion-protected units available on request
- Second non driven carriage available on request
- Scale upon request
- Protect: version with bellows optional (IP 40)

**Version** ■ **Split screw**

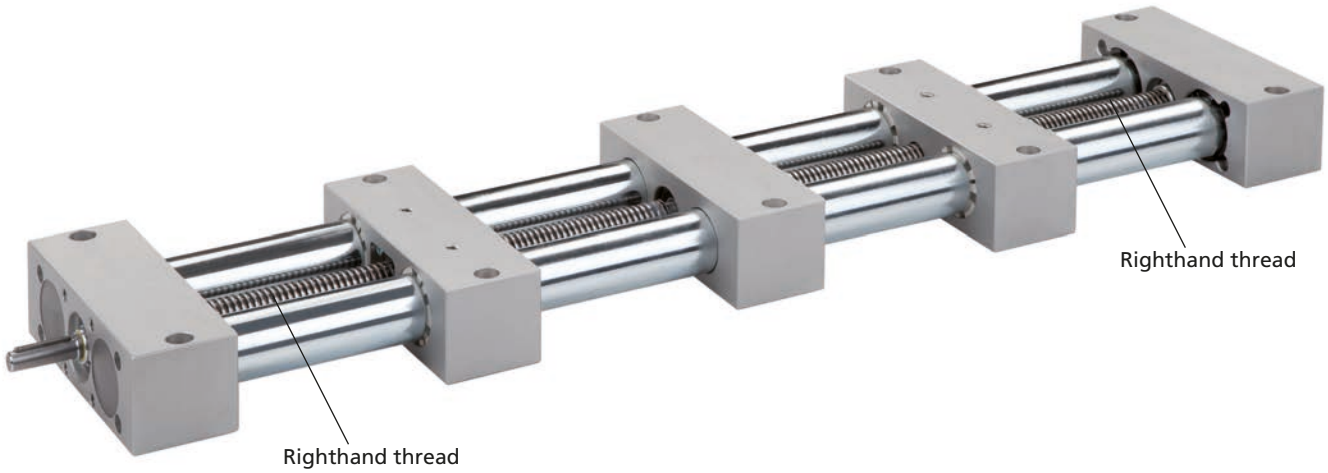


| Code No. | Type | Spindle | Basic length | B | C | D1 | D2 | D3 | F | G1 | G2 | H | J | L1 | L2 | M1 | M2 | M3 |
|---|---|---|---|---|---|---|---|---|---|---|---|---|---|---|---|---|---|---|
| 7943031 _ 1 _ A _ _ _ _ | 30 | Tr 14x3 | 250 | 130 | 54 | 8 | 8 | 30 $^{H8}$ | 2 | M6 / 12 deep | M6 / 9 deep | 27 | 50 | 26 | 26 | 40x30 | 114.5 | 70 |
| 7944031 _ 1 _ A _ _ _ _ | 40 | Tr 20x4 | 300 | 180 | 63 | 12 | 12 | 40 $^{H8}$ | 3 | M8 / 20 deep | M8 / 8 deep | 31.5 | 60 | 38 | 38 | 46 | 160 | 90 |

_ _ _ _ Total length = basic length + total travel [mm] **(minimum total travel 100 mm)**

A = standard
B = c/w angle drive on shaft end L1 (see page 127)

A = standard
B = c/w integrated spindle clamping

Total length = basic length + travel

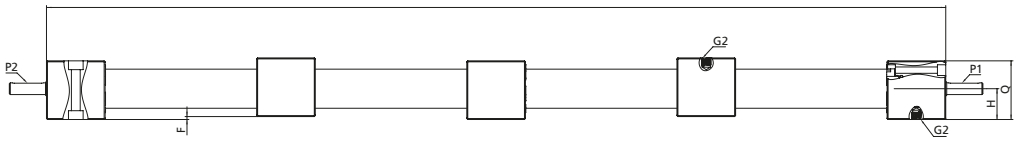


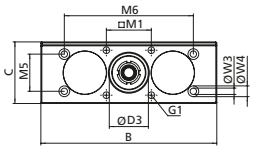


Total length – R

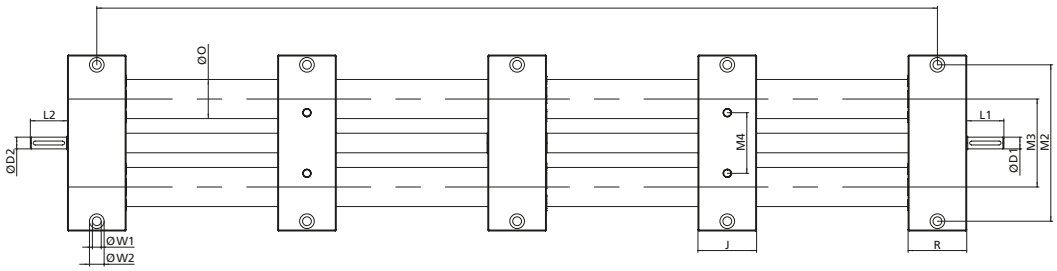


[mm]

| M4 | M5 | M6 | O | P1 | P2 | Q | R | W1 | W2 | W3 | W4 | Max. travel | Mass [kg] | |
|---|---|---|---|---|---|---|---|---|---|---|---|---|---|---|
| | | | | | | | | | | | | | Basic length | per 100 mm travel |
| 42 | – | – | 30 | 2x2x20 | 2x2x20 | 52 | 50 | 6.5 | 10 / 26,5 deep | – | – | 1375 | 4.2 | 0.4 |
| 62 | 38 | 132 | 40 | 4x4x32 | 4x4x32 | 60 | 60 | 9 | 15 / 9 deep | 6.5 | 11 / 8,5 deep | 2700 | 9.32 | 0.96 |

# EPX-II 30/40 – Dimensions / ordering data

**Order information:**

- Corrosion-protected units available on request
- Second non driven carriage available on request
- Scale upon request
- Protect: version with bellows optional (IP 40)

**Version** ■ **Right *or* lefthand thread**

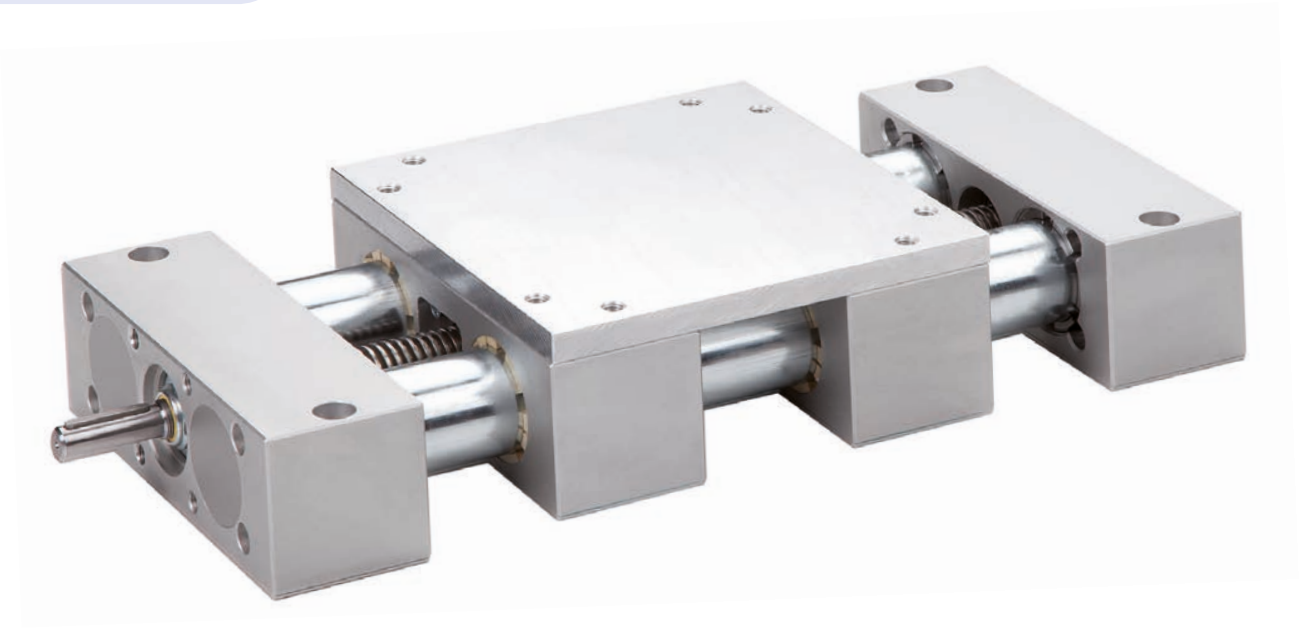

| Code No. | Type | Spindle | Basic length | B | C | D1 | D2 | D3 | F | G1 | G2 | G3 | H | H2 | J | L1 | L2 | M1 | M2 |
|---|---|---|---|---|---|---|---|---|---|---|---|---|---|---|---|---|---|---|---|
| 79_301 _ _ 1 _ A_ _ _ _ | 30 | Tr 14x3 | 230 | 130 | 64 | 8 | – | 30 H8 | 2 | M6 / 12 deep | M6 | M6 / 9 deep | 27 | 10 | 130 | 26 | – | 40x30 | 114.5 |
| 79_303 _ _ 1 _ A_ _ _ _ | | | | | | | 8 | | | | | | | | | | 26 | | |
| 79_401 _ _ 1 _ A_ _ _ _ | 40 | Tr 20x4 | 300 | 180 | 75 | 12 | – | 40 H8 | 3 | M8 / 20 deep | M8 | M8 / 8 deep | 31.5 | 12 | 180 | 38 | – | 46 | 160 |
| 79_403 _ _ 1 _ A_ _ _ _ | | | | | | | 12 | | | | | | | | | | 38 | | |

_ _ _ _ Total length = basic length + travel [mm]

A = standard
B = c/w angle drive on shaft end L1 (see page 127). (Only with spindle bearing ball bearing)

A = standard
B = c/w integrated spindle clamping (Only with spindle bearing ball bearing)

**Spindle bearing:**
1 = ball bearing
0 = slide bearing

**Spindle version:**
5 = righthand thread
6 = lefthand thread

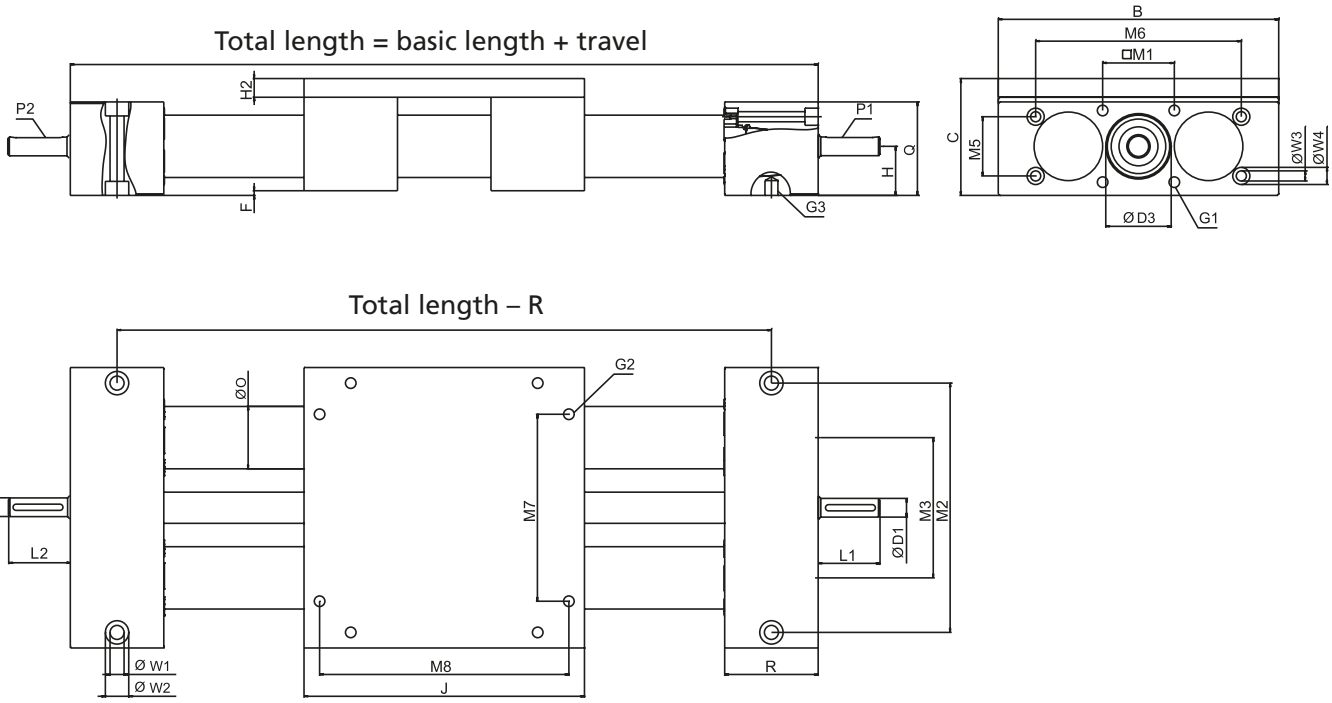


[mm]

| M3 | M5 | M6 | M7 | M8 | O | P 1 | P 2 | Q | R | W1 | W2 | W3 | W4 | Max. travel | Mass [kg] | |
|---|---|---|---|---|---|---|---|---|---|---|---|---|---|---|---|---|
| | | | | | | | | | | | | | | | Basic length | per 100 mm travel |
| 70 | – | – | 80 | 114 | 30 | 2x2x20 | –<br>2x2x20 | 52 | 50 | 6.5 | 10 / 26.5 deep | – | – | 1344<br>1318 | 4.1 | 0.4 |
| 90 | 38 | 132 | 120 | 160 | 40 | 4x4x32 | –<br>4x4x32 | 60 | 60 | 9 | 15 / 9 deep | 6.5 | 11 / 8.5 deep | 2700 | 8.95 | 0.96 |

# EPX-II 30/40 – Dimensions / ordering data

**Order information:**

- Please specify basic length and total travel when placing an order
- Corrosion-protected units available on request
- Second non driven carriage available on request
- Scale upon request
- Protect: version with bellows optional (IP 40)

**Version** ■ **Right *and* lefthand thread**

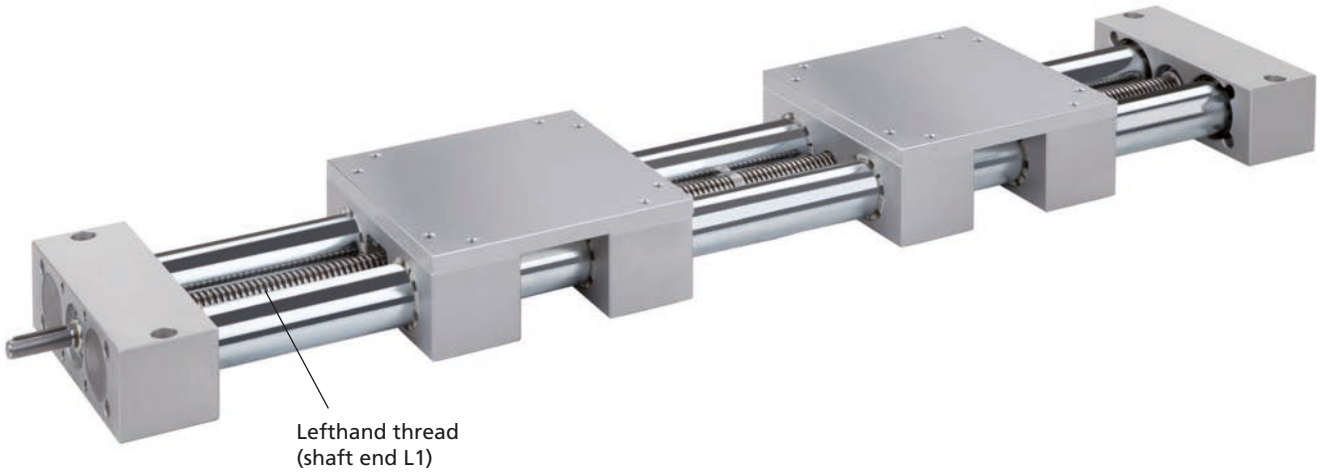


| Code No. | Type | Spindle | Basic length | B | C | D1 | D2 | D3 | F | G1 | G2 | G3 | H | H2 | J | L1 | L2 | M1 | M2 |
|---|---|---|---|---|---|---|---|---|---|---|---|---|---|---|---|---|---|---|---|
| 797301 _ _ 1 _ A_ _ _ _ | 30 | Tr 14x3 | 360 | 130 | 64 | 8 | – | 30 H8 | 2 | M6 / 12 deep | M6 | M6 / 9 deep | 27 | 10 | 130 | 26 | – | 40x30 | 114.5 |
| 797303 _ _ 1 _ A_ _ _ _ | | | | | | | 8 | | | | | | | | | | 26 | | |
| 797401 _ _ 1 _ A_ _ _ _ | 40 | Tr 20x4 | 480 | 180 | 75 | 12 | – | 40 H8 | 3 | M8 / 20 deep | M8 | M8 / 8 deep | 31.5 | 12 | 180 | 38 | – | 46 | 160 |
| 797403 _ _ 1 _ A_ _ _ _ | | | | | | | 12 | | | | | | | | | | 38 | | |

_ _ _ _ Total length = basic length + travel [mm]

A = standard
B = c/w angle drive on shaft end L1 (see page 127). (Only with spindle bearing ball bearing)

A = standard
B = c/w integrated spindle clamping (Only with spindle bearing ball bearing)

**Spindle bearing:**
1 = ball bearing
0 = slide bearing

Total length = basic length + travel

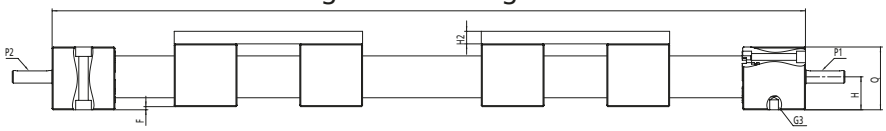


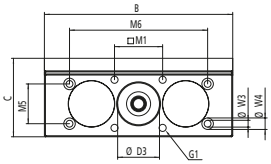


Total length – R

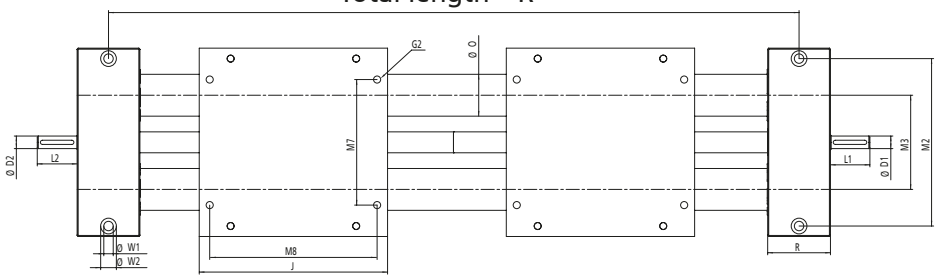


[mm]

| M3 | M5 | M6 | M7 | M8 | O | P 1 | P 2 | Q | R | W1 | W2 | W3 | W4 | Max. travel | Mass [kg] | |
|---|---|---|---|---|---|---|---|---|---|---|---|---|---|---|---|---|
| | | | | | | | | | | | | | | | Basic length | per 100 mm travel |
| 70 | – | – | 80 | 114 | 30 | 2x2x20 | –<br>2x2x20 | 52 | 50 | 6.5 | 10 / 26.5 deep | – | – | 1640 | 6.3 | 0.4 |
| 90 | 38 | 132 | 120 | 160 | 40 | 4x4x32 | –<br>4x4x32 | 60 | 60 | 9 | 15 / 9 deep | 6.5 | 11 / 8,5 deep | 2520 | 14.17 | 0.96 |

# EPX-II 30/40 – Dimensions / ordering data

**Order information:**

- Please specify basic length and total travel when placing an order
- Corrosion-protected units available on request
- Second non driven carriage available on request
- Scale upon request
- Protect: version with bellows optional (IP 40)

**Version** ■ **Split screw**




| Code No. | Type | Spindel | Basic length | B | C | D1 | D2 | D3 | F | G1 | G2 | G3 | H | H2 | J | L1 | L2 | M1 | M2 |
|---|---|---|---|---|---|---|---|---|---|---|---|---|---|---|---|---|---|---|---|
| 7983031 _ 1 _ A_ _ _ _ | 30 | Tr 14x3 | 410 | 130 | 64 | 8 | 8 | 30 H8 | 2 | M6 / 12 deep | M6 | M6 / 9 deep | 27 | 10 | 130 | 26 | 26 | 40x30 | 114.5 |
| 7984031 _ 1 _ A_ _ _ _ | 40 | Tr 20x4 | 540 | 180 | 75 | 12 | 12 | 40 H8 | 3 | M8 / 20 deep | M8 | M8 / 8 deep | 31.5 | 12 | 180 | 38 | 38 | 46 | 160 |

_ _ _ _ Total length = basic length + travel [mm]

A = standard
B = c/w angle drive on shaft end L1 (see page 127)

A = standard
B = c/w integrated spindle clamping

Total length = basic length + travel

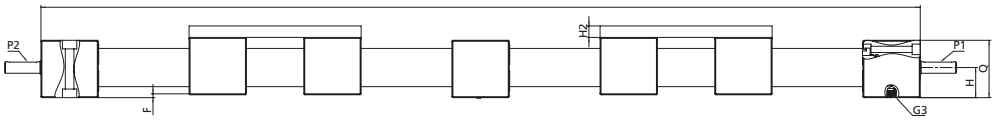


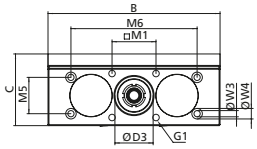


Total length – R

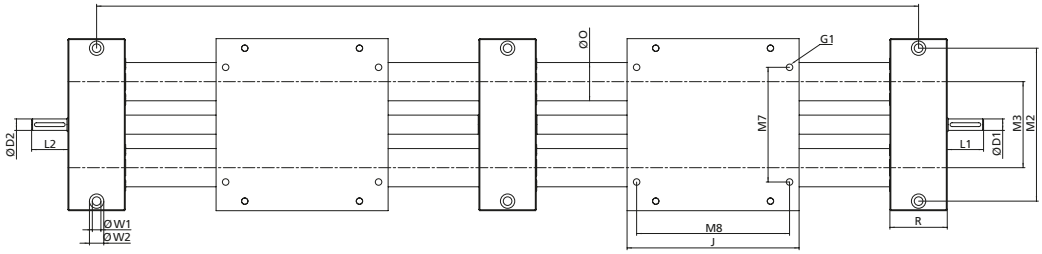


[mm]

| M3 | M5 | M6 | M7 | M8 | O | P 1 | P 2 | Q | R | W1 | W2 | W3 | W4 | Max. travel | Mass [kg] | |
|---|---|---|---|---|---|---|---|---|---|---|---|---|---|---|---|---|
| | | | | | | | | | | | | | | | Basic length | per 100 mm travel |
| 70 | – | – | 80 | 114 | 30 | 2x2x20 | 2x2x20 | 52 | 50 | 6.5 | 10 / 26,5 deep | – | – | 1295 | 7.2 | 0.4 |
| 90 | 38 | 132 | 120 | 160 | 40 | 4x4x32 | 4x4x32 | 60 | 60 | 9 | 15 / 9 deep | 6.5 | 11 / 8.5 deep | 2460 | 16.16 | 0.96 |

## Handwheel



Diam. 140-200



Diam. 60-100

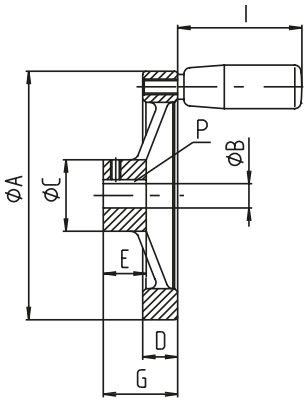


**Material:** Die-cast aluminium, black powder-coated

[mm]

| Code No. | Type | ØA | B | C | D | E | G | P | I |
|---|---|---|---|---|---|---|---|---|---|
| 90913 | 30 | 100 | 8 | 28 | 14 | 17 | 30 | 2x2 | 52 |
| 90915 | 40 | 100 | 12 | 28 | 14 | 17 | 30 | 4x4 | 52 |
| 90905 | 40 | 140 | 12 | 36 | 16.5 | 19.5 | 36 | 4x4 | 66 |

## Chain wheel

- Other sizes on request

**Material:** Steel, 500 N/mm² min.



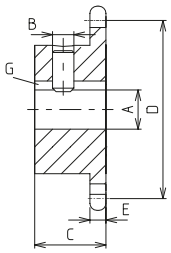


[mm]

| Code No. | Type | A | B | C | D | E | G | No. of teeth | Size |
|---|---|---|---|---|---|---|---|---|---|
| 91703 | 30 | 8 | M6 | 18 | 41.1 | 4.5 | 2x2 | 10 | 1/2 x 3/16" |
| 91704 | 40 | 12 | M6 | 20 | 53 | 4.5 | 4x4 | 13 | 1/2 x 3/16" |

## HTD timing belt pulley

- Suitable for maintenance-free continuous operation
- Excellent accuracy and zero backlash during change of direction
- Clampable on feather key

**Material:** Steel



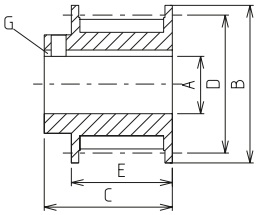


[mm]

| Code No. | Type | A | B | C | D | E | G | Tensile force | Pitch |
|---|---|---|---|---|---|---|---|---|---|
| 92103 | 30 | 8 | 23 | 20 | 19.09 | 14.5 | 2x2 | 220 N | 5 |
| 92105 | 40 | 12 | 32 | 26 | 28.65 | 20.5 | 4x4 | 330 N | 5 |

## Bevel gear set



- Straight toothed
- Contact angle 20°
- Axial angle 90°
- Crowned tooth faces

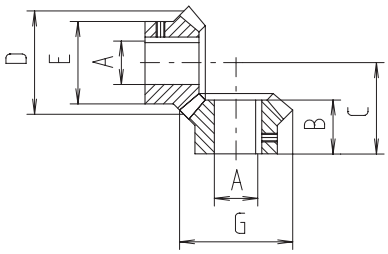


[mm]

| Code No. | Type | A | B | C | D | E | G | No. of teeth | Module |
|---|---|---|---|---|---|---|---|---|---|
| 91603 | Set 30 | 8 | 15 | 24 | 24 | 18 | 26.11 | 16 | 1.5 |
| 91623 | Single component 30 | | | | | | | | |
| 91604 | Set 40 | 12 | 19 | 31 | 32 | 26 | 35 | 16 | 2 |
| 91664 | Single component 40 | | | | | | | | |

## Angle drive

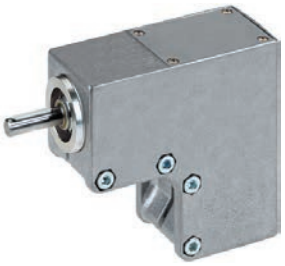

- If angle drives are fitted, the linear units are delivered exclusively with ball bearings

**Delivery contents:** Housing, bevel gear set and transmission unit

**Material:** housing-die-cast aluminium,
steel parts-zinc plated,
shaft bright

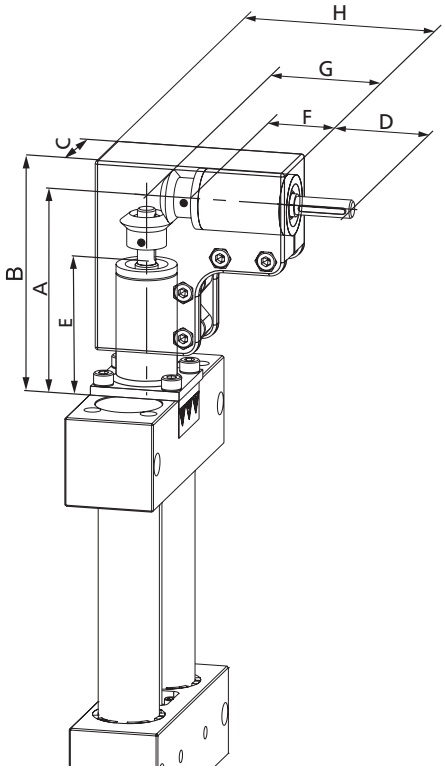


Power transmission of bevel gears

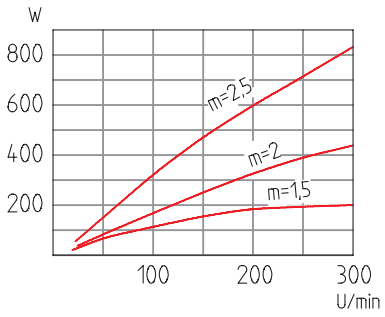


[mm]

| Code No. | Type | A | B | C | D | E | F | G | H |
|---|---|---|---|---|---|---|---|---|---|
| Assembled to EP(X) | | | | | | | | | |
| p. 114-124 | 30 | 88 | 109 | 42 | 31 | 55 | 48 | 75 | 96 |
| p. 114-124 | 40 | 129.7 | 157.7 | 54 | 39,5 | 83 | 65 | 100 | 128 |
| Retrofit kit | | | | | | | | | |
| 91556 | 30 | 88 | 109 | 42 | 31 | 55 | 48 | 75 | 96 |
| 91554 | 40 | 129.7 | 157.7 | 54 | 39.5 | 83 | 65 | 100 | 128 |

## Selection table – motor adaptor/coupling

| Type | Servo motor | | Three-phase A.C. motor | |
|---|---|---|---|---|
| | RK-AC 118 | RK-AC 240 | 90/120 W | 180/250 W |
| EP(X)-II 30 | 949200 | – | 949623 | – |
| | 911430<br>0811 | – | 911940<br>0812 | – |
| EP(X)-II 40 | 949201 | 949221 | 949614 | 949414 |
| | 911430<br>1112 | 911430<br>1214 | 911430<br>1212 | 911430<br>1214 |

Note: For further details on motor versions, please refer to the chapter “Motors and controls” in our main catalogue “Linear Technology”.

## Motor adaptor

- Simple assembly
- Exact fit due to centering shoulders

**Material:** Aluminium

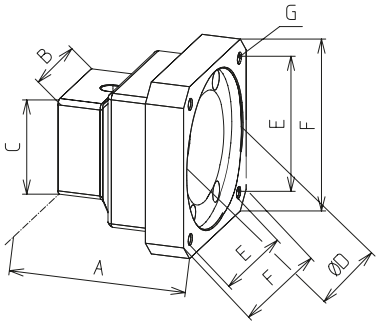


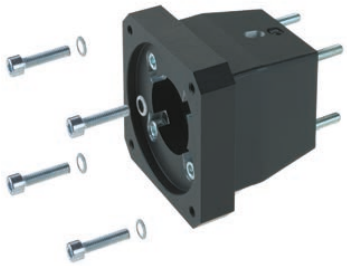

[mm]

| Code No. | Type | A | B | C | D | E | F | G |
|---|---|---|---|---|---|---|---|---|
| 949200 | 30 | 64 | 53.5 | 53.5 | 60 | 53 | 70 | M5 |
| 949247 | 30 | 64 | 53.5 | 53.5 | 73 | 70 | 90 | M6 |
| 949275 | 30 | 71 | 53.5 | 53.5 | 60 | 53 | 70 | M5 |
| 949623 | 30 | 64 | 53.5 | 53.5 | 50 | 65 | 80 | M5 |
| 949201 | 40 | 74 | 60 | 60 | 60 | 53 | 70 | M5 |
| 949276 | 40 | 83 | 60 | 60 | 60 | 53 | 70 | M5 |
| 949221 | 40 | 83 | 60 | 60 | 80 | 70,7 | 90 | M6 |
| 949248 | 40 | 83 | 60 | 60 | 73 | 70 | 90 | M6 |
| 949614 | 40 | 83 | 60 | 60 | 50 | 46 | 80 | M5 |
| 949414 | 40 | 83 | 60 | 60 | 80 | 100 | Ø120 | Ø6.6 |

## Motor adaptor for EHL

**Linear unit connection**

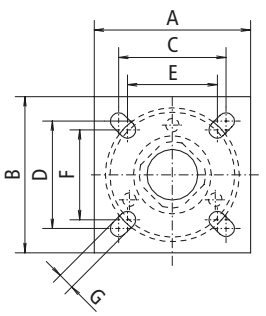


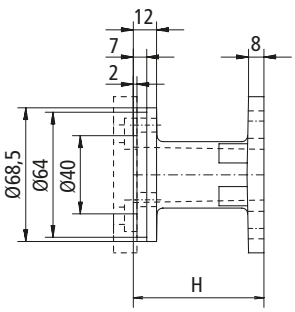


**EHL connection**

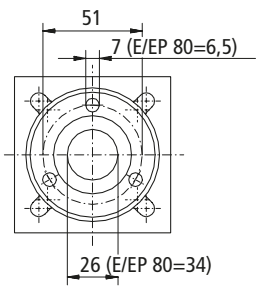


[mm]

| Code No. | for linear unit | PinØ unit | A | B | C | D | E | F | G | H | L | Ø |
|---|---|---|---|---|---|---|---|---|---|---|---|---|
| 92667 | EP(X)-II 30 | 8 | 50 | 50 | 30 | 40 | 30 | 30 | 6 | 67 | – | – |
| 92668 | EP(X)-II 40 | 12 | 60 | 60 | 46 | 46 | 36 | 36 | 7 | 67 | – | – |

## Motor adaptor for linear units

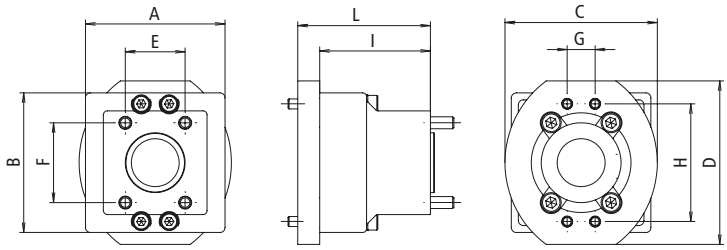


[mm]

| Linear unit | LZ S Code No. | LZ P Code No. | Coupling Code No. | A | B | C | D | E | F | G | H | I | L |
|---|---|---|---|---|---|---|---|---|---|---|---|---|---|
| EP(X)-II 30 | 949710 | 949711 | 9109200810 | 70 | 70 | 76.4 | 82 | 30 | 40 | 14 | 59 | 55.5 | 66.5 |
| EP(X)-II 40 | 949712 | 949713 | 9114301012 | 70 | 70 | 76.4 | 82 | 46 | 46 | 52.3 | 52.3 | 73.5 | 81.5 |

## Coupling

- Small size
- Shaft connection without backlash
- Maintenance-free
- Easy plug-in assembly

**Material:** Hub – aluminium
Gear ring – polyurethane

To ensure the smooth running of the coupling, a clearance of **D+3 mm** is required.

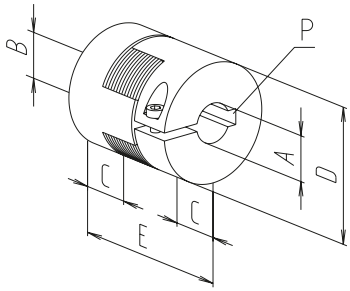




[mm]

| Code No. | A | B | C | D | E | P | Torque [Nm] with feather key | Torque [Nm] without feather key |
|---|---|---|---|---|---|---|---|---|
| 9109200895 | 8 | 9,5 | 10 | 20 | 30 | 2x2 / – | 5 | 3 |
| 9114300811 | 8 | 11 | 11 | 30 | 35 | 2x2 / 4x4 | 12 | 6 |
| 9114300816 | 8 | 16 | 11 | 30 | 35 | 2x2 / 5x5 | 12 | 6 |
| 9114309512 | 9,5 | 12 | 11 | 30 | 35 | – / 4x4 | 12 | 6 |
| 9114301112 | 11 | 12 | 11 | 30 | 35 | 4x4 / 4x4 | 12 | 6 |
| 9114301212 | 12 | 12 | 11 | 30 | 35 | 4x4 / 4x4 | 12 | 6 |
| 9114301214 | 12 | 14 | 11 | 30 | 35 | 4x4 / 5x5 | 12 | 6 |
| 9114301216 | 12 | 16 | 11 | 30 | 35 | 4x4 / 5x5 | 12 | 6 |
| 9119400812 | 08 | 12 | 25 | 40 | 65 | 2x2 / 4x4 | 17 | 10 |

Further information for adaption and drives see catalogue linear technology, chapter motors & controls from page 519

# EP(X)-II 30/40 – Drive

## Positioning indicator

- Permitted ambient temperature +80°C
- Figure height 6 mm
- Reading accuracy ± 0.1 mm
- If positioning indicators are fitted, the linear units are delivered exclusively with ball bearings

**Material:** Housing polyamide 6 Orange RAL 2004,
Steel parts corrosion-protected

**Scope of delivery:** Positioning indicator, clamping ring, shaft extension and fastenings

**Note:** "rising" and "falling" versions refer to the clockwise rotation of the drive shaft.



Installation position: horizontal

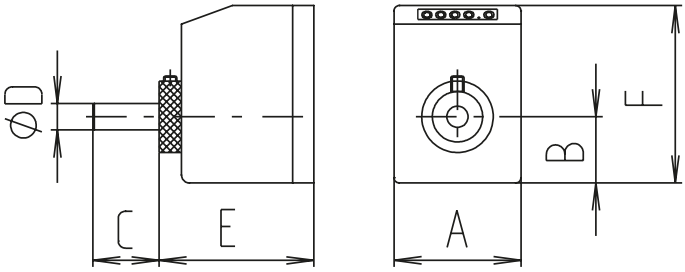




Installation position: vertical

[mm]

| Type | Installation position | Code No. | Version | Code No. | Version* | A | B | C | D | E | F |
|---|---|---|---|---|---|---|---|---|---|---|---|
| 30 | Horizontal | 91043 | 3 mm rising | 91010 | 6 mm rising | 48 | 25 | 18 | 8 | 59 | 67 |
| 30 | | 91053 | 3 mm falling | 91029 | 6 mm falling | 48 | 25 | 18 | 8 | 59 | 67 |
| 30 | Vertical | 91063 | 3 mm rising | 91020 | 6 mm rising | 48 | 25 | 18 | 8 | 59 | 67 |
| 30 | | 91073 | 3 mm falling | 91019 | 6 mm falling | 48 | 25 | 18 | 8 | 59 | 67 |
| 40 | Horizontal | 91004 | 4 mm rising | 91030 | 8 mm rising | 48 | 25 | 38 | 12 | 59 | 67 |
| 40 | | 91014 | 4 mm falling | 91039 | 8 mm falling | 48 | 25 | 38 | 12 | 59 | 67 |
| 40 | Vertical | 91024 | 4 mm rising | 91040 | 8 mm rising | 48 | 25 | 38 | 12 | 59 | 67 |
| 40 | | 91034 | 4 mm falling | 91041 | 8 mm falling | 48 | 25 | 38 | 12 | 59 | 67 |

* Version with double lead e.g. for installation on righthand/lefthand thread screws

## Holder for inductive limit

- Limit switch can be moved and fixed axially

Type 30 – 40

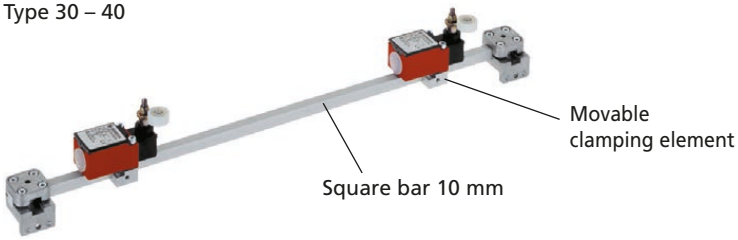


| Type | 30 – 40 |
|---|---|
| Max. voltage | 250 V AC |
| Max. switching current | 6 A |
| Max. starting current | 16 A |
| Lifetime | 10 million switching cycles |
| Axis lever adjustment | locking at 10° increments |
| Protection rating | IP 65 |
| Ambient temperature | -30°C to +80°C |

| Code No. | Type | Basic length | Version |
|---|---|---|---|
| 92961_ _ _ _ | 30 – 40 | 245 | with switch |
| 92962_ _ _ _ | 30 – 40 | 245 | without switch |

Total length of linear unit

## Mechanical limit switch

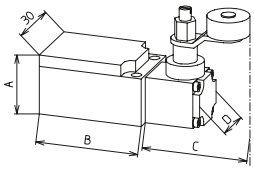


[mm]

| Code No. | Type | Switching function | A | B | C | D |
|---|---|---|---|---|---|---|
| 91905 | 30 – 40 | NC contact / NO contact | 26.5 | 45 | 45.5 | 21 |

- Limit switch can be moved and fixed axially

Type 30 – 40

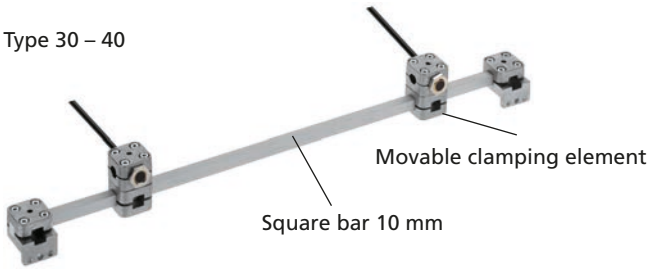


| Type | 30 – 40 |
|---|---|
| Voltage | 10 - 30 V DC |
| Max. switching current | 200 mA |
| Operating distance | 4 mm for steel |
| Protection rating | IP 67 |
| Ambient temperature | -25°C to +70°C |
| Cable lengths | 2m |

| Code No. | Type | Basic length | Version |
|---|---|---|---|
| 92965_ _ _ _ | 30 – 40 | 125 | without switch |

Total length of linear unit

## Inductive limit switch

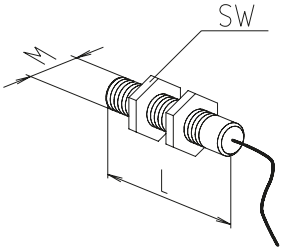


[mm]

| Code No. | Type | Switching function | L | M | Wrench size (SW) |
|---|---|---|---|---|---|
| 92825 | 30 – 40 | Changeover | 50 | 12x1 | 17 |

# Twin tube guide/actuator – COPAS

**Elegant anodised aluminium design ensures precision running even at high load ratings**

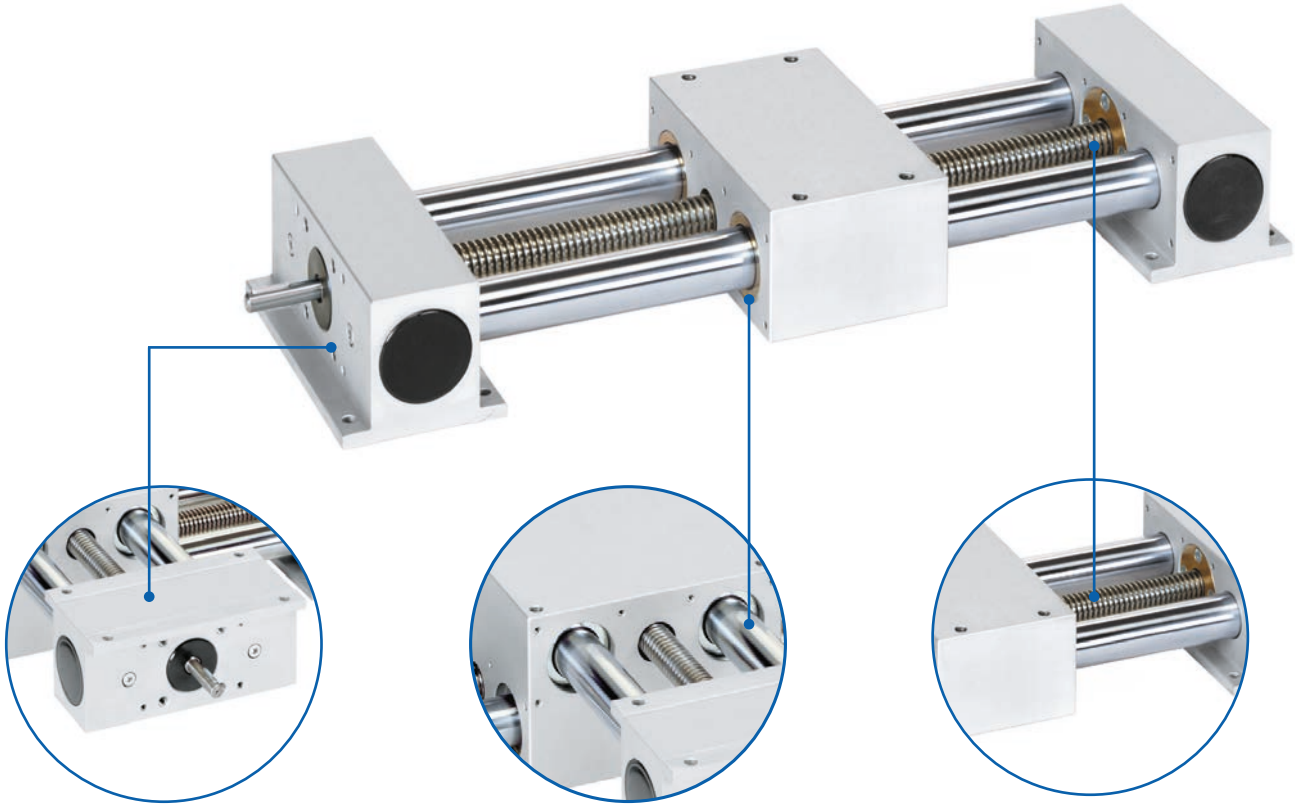

**Use of high-quality materials**
- ✓ Enables high moments
- ✓ Straight, large fastening surfaces
- ✓ Visually attractive

**Ball lining guide**
- ✓ Precise and exceptionally quiet running

**Choice of drive screw**
- ✓ ACME screw
- ✓ Ball screw

## Features:

- High load ratings
- Free choice of ACME screw or ball screw drive
- Guide shaft made of tempered steel, induction hardened
- High availability due to pre-assembled kits

## Options:

- Corrosion-protected units
- Bellows
- Free-running carriage

# COPAS twin tube actuator - Table of Contents


## Properties/Technical data

- General information/operating conditions .... 134
- Load data ..... 135
- Geometric moments of inertia ..... 135

## Versions
(Dimensions, order numbers)

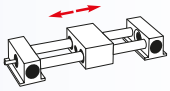

**Horizontal**

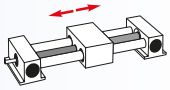

- Right *or* lefthand thread ..... 138 - 139

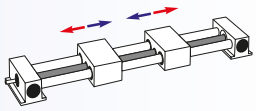

- Right *and* lefthand thread ..... 140 - 141

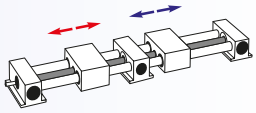

- Split screw ..... 142 - 143

**Vertical**

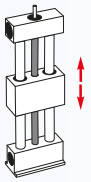

- Right *or* lefthand thread ..... 144 - 145

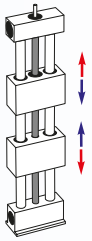

- Right *and* lefthand thread ..... 146 - 147

**Crossing**

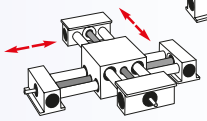

- Right or lefthand thread ..... 148 - 149

## Accessories

**Fixing**

- Connecting plate for cross table ..... 150

**Drive**

- Handwheel ..... 151
- Motor adaptor/coupling ..... 153 - 153
- Angular gear ..... 154 - 155

**Position determination**

- Positioning indicator ..... 156
- Limit switches ..... 157 - 158

# COPAS – Technical data

## General information/operating conditions

| | |
|---|---|
| Design | Axis, optional ACME screw or ball screw drive |
| Guidance system | Ball lining guide |
| Installation position | Any position |
| Lead accuracy | ACME screw ± 0.15 mm/300 mm travel, ball screw drive ± 0.1 mm/300 mm travel |
| Self-locking | on ACME screw |
| Duty cycle | ACME: S3 30% Basic 1h / Ball screw: S3 100% |
| Ambient temperature | 0°C to +60°C |

## Screw lead

[mm]

| ACME screw | |
|---|---|
| Type | Screw lead |
| COPAS 20 | 3 |
| COPAS 30 | 4 |
| COPAS 40 | 4 |

[mm]

| Ball screw drive | |
|---|---|
| Type | Screw lead |
| COPAS 20 | 5 |
| COPAS 30 | 5 |
| COPAS 40 | 5 |

$$\text{Required screw speed n [rpm]} = \frac{\text{speed [m/min] x 1000}}{\text{screw lead [mm]}}$$

## Critical screw speed

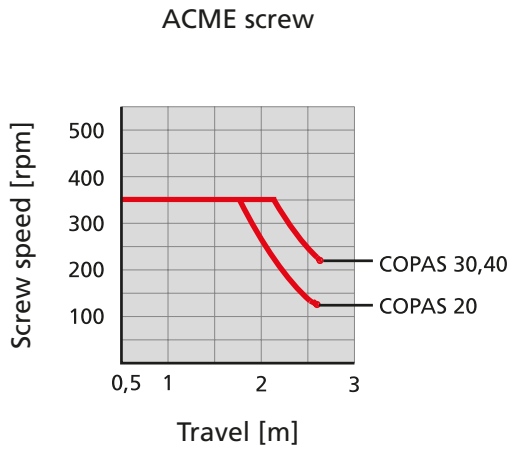


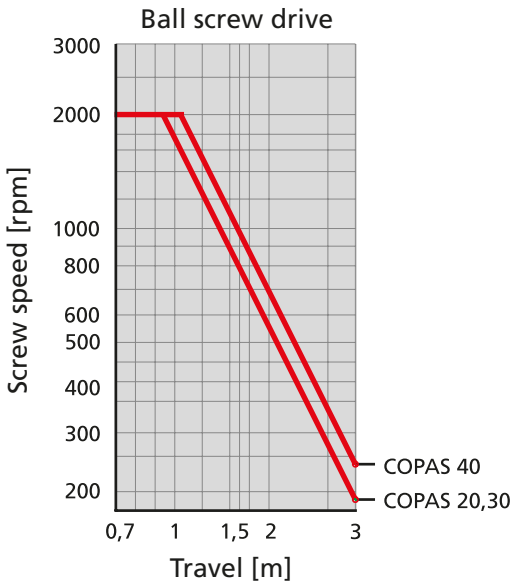


## No-load torque

[Nm]

| Type | ACME screw | Ball screw |
|---|---|---|
| 20 | 0.30 | 0.20 |
| 30 | 0.40 | 0.30 |
| 40 | 0.50 | 0.40 |

## Load data*

F Force [N]

M Moment [Nm]

I Geometric moment of inertia [$cm^4$]

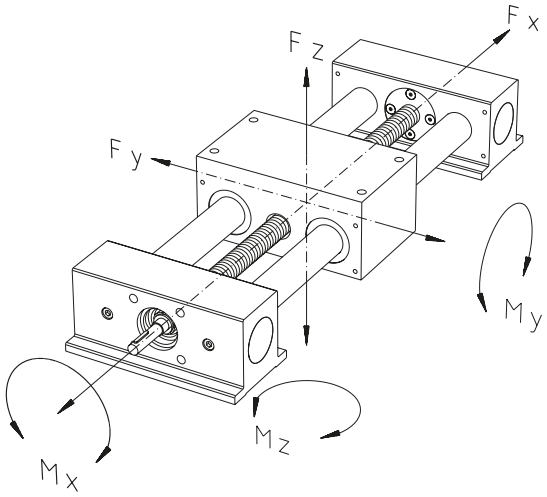


* with reference to carriage (deflection of guide element f = 0.5 mm, static, resting on end elements)

| Type | Fx ACME screw | Fx Ball screw | Fy | | Fz | | Mx | My | Mz |
|---|---|---|---|---|---|---|---|---|---|
| total length [mm] | 500 | 500 | 500 | 1000 | 500 | 1000 | | | |
| COPAS 20 | 800 | 1000 | 700 | 400 | 1000 | 600 | 30 | 22 | 32 |
| COPAS 30 | 1000 | 1000 | 2000 | 1000 | 3000 | 2000 | 112 | 99 | 132 |
| COPAS 40 | 1000 | 1600 | 3500 | 2400 | 5200 | 3200 | 234 | 218 | 294 |

## Geometric moment of inertia

[$cm^4$]

| Type | Iy | Iz |
|---|---|---|
| COPAS 20 | 1.6 | 202 |
| COPAS 30 | 8.0 | 710 |
| COPAS 40 | 25.1 | 1820 |

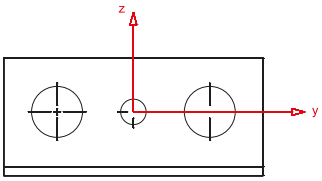

# COPAS RC – Versions

**Order information:**

- Second carriage available on request
- Bellows version available as optional extra
- Longer travel lengths on request

**Version**
- Horizontal
- Guide

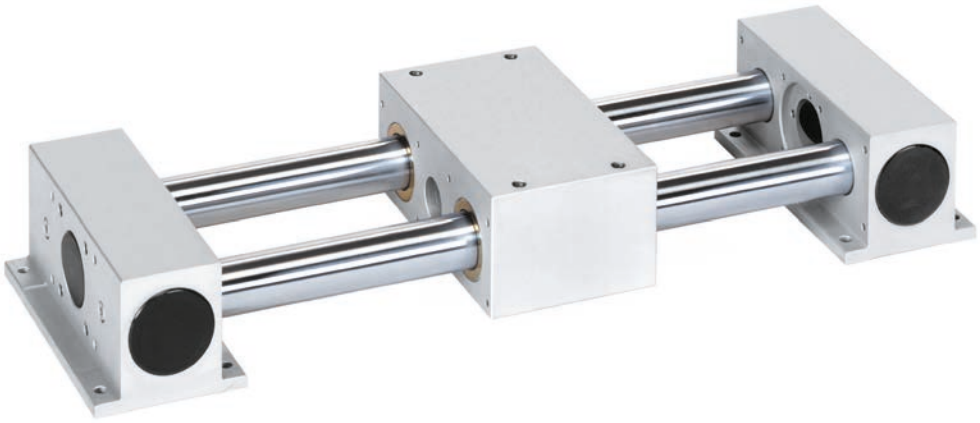

| Code No. | Type | Basic length | B | C | Ø D1 | Ø D2 | G | H | I | J |
|---|---|---|---|---|---|---|---|---|---|---|
| MFA2000CA | RC 20 | 202 | 136 | 60 | 20 | 7 | M6-16 deep | 58 | 136 | 90 |
| MFA3000CA | RC 30 | 241 | 168 | 80 | 30 | 7 | M8-16 deep | 74 | 168 | 100 |
| MFA4000CA | RC 40 | 305 | 204 | 100 | 40 | 9 | M8-16 deep | 92 | 204 | 125 |

_ _ _ _ Total length = basic length + travel [mm]

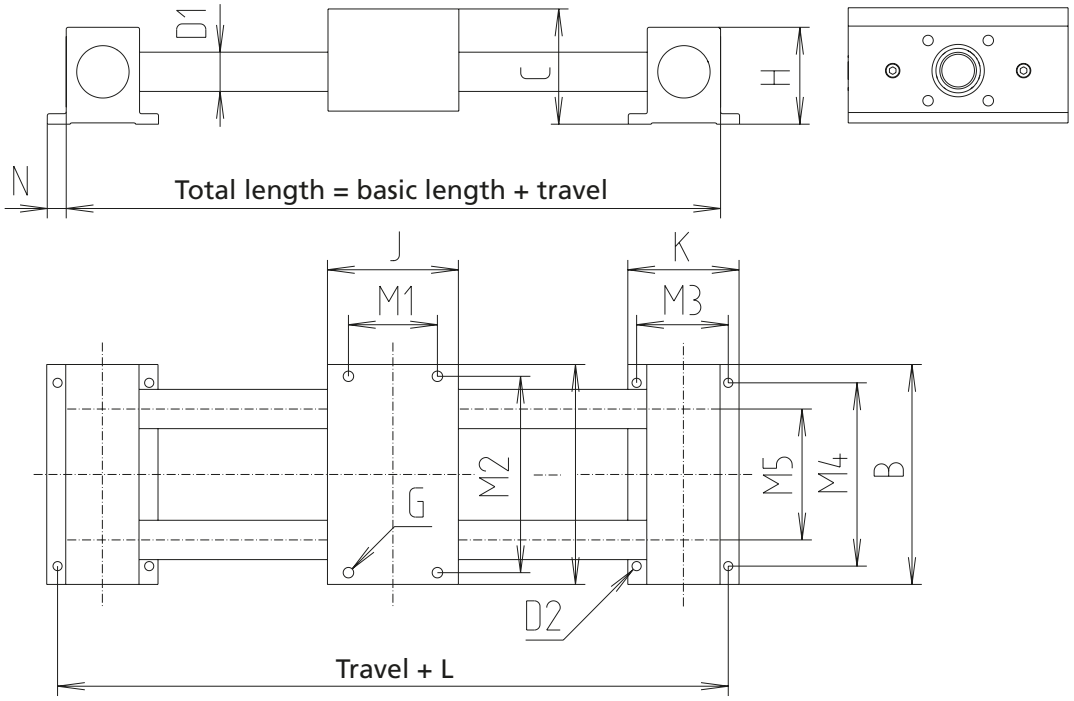


[mm]

| K | L | M1 | M2 | M3 | M4 | M5 | N | Max. travel | Mass [kg] | |
|---|---|---|---|---|---|---|---|---|---|---|
| | | | | | | | | | Basic length | per 100 mm travel |
| 70 | 216 | 50 | 120 | 56 | 110 | 80 | 14 | 1300 | 3.9 | 0.5 |
| 85 | 256 | 60 | 150 | 70 | 140 | 100 | 14.5 | 2300 | 6.5 | 1.1 |
| 110 | 325 | 100 | 170 | 90 | 170 | 120 | 20 | 2250 | 15.1 | 2.0 |

# COPAS – Versions

**Order information:**

- Second free-running carriage available on request
- Bellows version available as optional extra
- Longer travel lengths on request

**Version**

- **Horizontal actuator**
- **Right *or* lefthand thread**

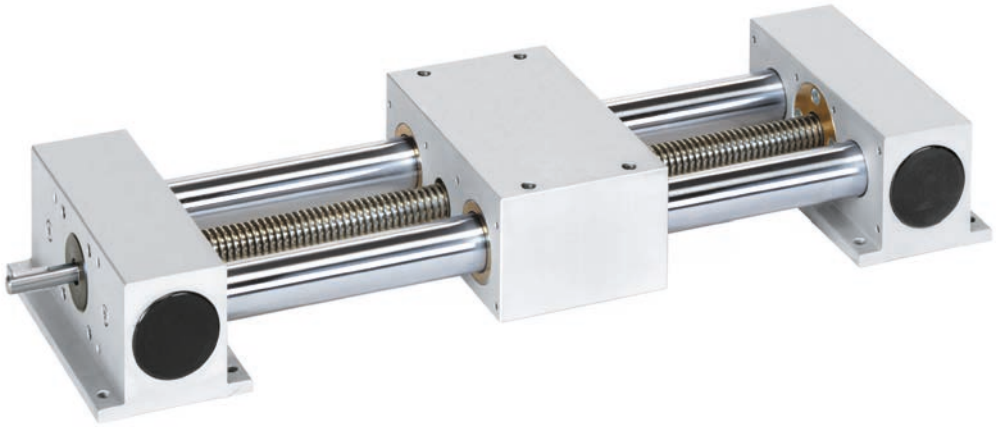

| Code No. | Type | Screw | Basic length | A | B | C | Ø D | Ø D1 | E | F | G | H | I | J1 | J2 | K1 | K2 | L |
|---|---|---|---|---|---|---|---|---|---|---|---|---|---|---|---|---|---|---|
| **ACME screw** | | | | | | | | | | | | | | | | | | |
| 74_20_4 | TR-HO 20 | 14 x 3 | 202 | 90 | 136 | 50 | 7 | 30 | 120 | 70 | 136 | 56 | 110 | 30 | 37 | 40 | 60 | 216 |
| 74_30_4 | TR-HO 30 | 20 x 4 | 241 | 100 | 168 | 60 | 7 | 40 | 150 | 85 | 168 | 70 | 140 | 46 | 48 | 46 | 77 | 255 |
| 74_40_4 | TR-HO 40 | 20 x 4 | 305 | 125 | 204 | 100 | 9 | 40 | 170 | 110 | 204 | 90 | 170 | 46 | 55 | 46 | 87 | 325 |
| **Ball screw** | | | | | | | | | | | | | | | | | | |
| 75020_4 | KG-HO 20 | 16 x 5 | 202 | 90 | 136 | 50 | 7 | 30 | 120 | 70 | 136 | 56 | 110 | 30 | 37 | 40 | 60 | 216 |
| 75030_4 | KG-HO 30 | 16 x 5 | 241 | 100 | 168 | 60 | 7 | 40 | 150 | 85 | 168 | 70 | 140 | 46 | 48 | 46 | 77 | 255 |
| 75040_4 | KG-HO 40 | 20 x 5 | 305 | 125 | 204 | 100 | 9 | 40 | 170 | 110 | 204 | 90 | 170 | 46 | 55 | 46 | 87 | 325 |

_ _ _ _ Total length = basic length + travel [mm]

**Drive shafts:**
1 = 1 drive shaft
3 = 2 drive shafts

**Version:**
0 = righthand thread
1 = lefthand thread

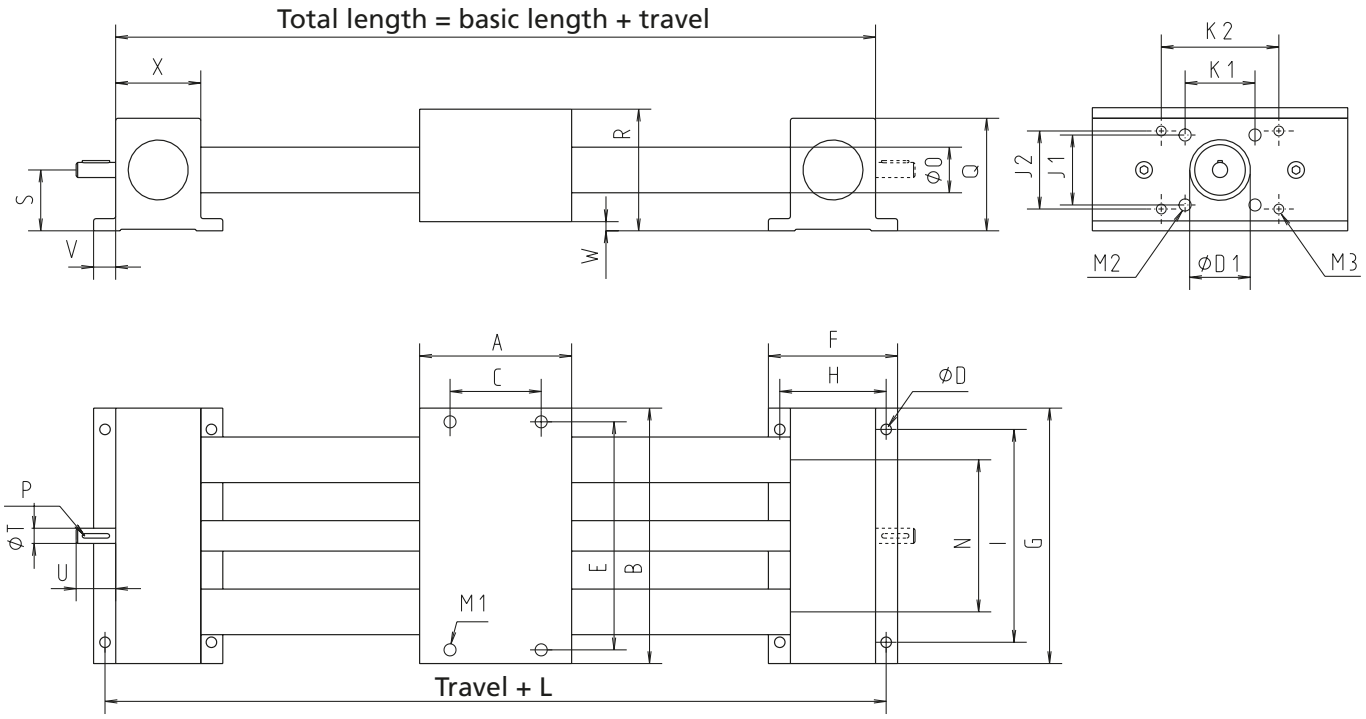


[mm]

| M1 | M2 | M3 | N | Ø O | P | Q | R | S | Ø T | U | V | W | X | Max. travel | Mass [kg] | |
|---|---|---|---|---|---|---|---|---|---|---|---|---|---|---|---|---|
| | | | | | | | | | | | | | | | Basic length | per 100 mm travel |
| M6-16 deep | M6-12 deep | M4-10 deep | 80 | 20 | 2 x 2 x 20 | 58 | 60 | 30 | 8 | 26 | 14 | 2 | 42 | 1300 | 4.5 | 0.59 |
| M8-16 deep | M8-12 deep | M5-12 deep | 100 | 30 | 3 x 3 x 20 | 74 | 80 | 40 | 10 | 38 | 14.5 | 10 | 56 | 2300 | 8.5 | 1.30 |
| M8-16 deep | M8-15 deep | M6-14 deep | 120 | 40 | 4 x 4 x 25 | 92 | 100 | 50 | 12 | 38 | 20 | 12 | 70 | 2250 | 16.8 | 2.16 |
| | | | | | | | | | | | | | | | | |
| M6-16 deep | M6-12 deep | M4-10 deep | 80 | 20 | 2 x 2 x 20 | 58 | 60 | 30 | 8 | 26 | 14 | 2 | 42 | 1800 | 4.6 | 0.62 |
| M8-16 deep | M8-12 deep | M5-12 deep | 100 | 30 | 3 x 3 x 20 | 74 | 80 | 40 | 10 | 38 | 14.5 | 10 | 56 | 1800 | 8.5 | 1.23 |
| M8-16 deep | M8-15 deep | M6-14 deep | 120 | 40 | 4 x 4 x 25 | 92 | 100 | 50 | 12 | 38 | 20 | 12 | 70 | 2250 | 16.9 | 2.17 |

# COPAS – Versions

**Order information:**

- Please specify total travel when placing an order
- Second free-running carriage available on request
- Bellows version available as optional extra
- Longer travel lengths on request

**Version**

- **Horizontal actuator**
- **Right *and* lefthand thread**

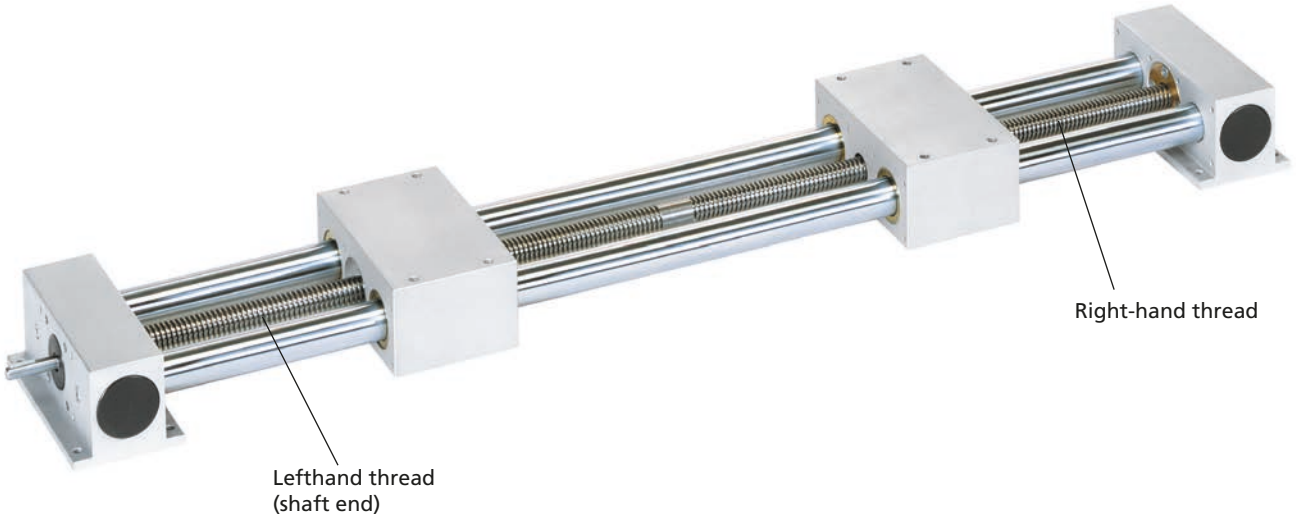


| Code No. | Type | Screw | Basic length | A | B | C | Ø D | Ø D1 | E | F | G | H | I | J1 | J2 | K1 | K2 | L |
|---|---|---|---|---|---|---|---|---|---|---|---|---|---|---|---|---|---|---|
| ACME screw | | | | | | | | | | | | | | | | | | |
| 74220_4 | TR-HU 20 | 14 x 3 | 292 | 90 | 136 | 50 | 7 | 30 | 120 | 70 | 136 | 56 | 110 | 30 | 37 | 40 | 60 | 306 |
| 74230_4 | TR-HU 30 | 20 x 4 | 341 | 100 | 168 | 60 | 7 | 40 | 150 | 85 | 168 | 70 | 140 | 46 | 48 | 46 | 77 | 355 |
| 74240_4 | TR-HU 40 | 20 x 4 | 430 | 125 | 204 | 100 | 9 | 40 | 170 | 110 | 204 | 90 | 170 | 46 | 55 | 46 | 87 | 450 |

_ _ _ _ Total length = basic length + travel [mm]

**Version:**
1 = 1 drive shaft at righthand thread end
2 = 1 drive shaft at lefthand thread end
3 = 2 drive shafts

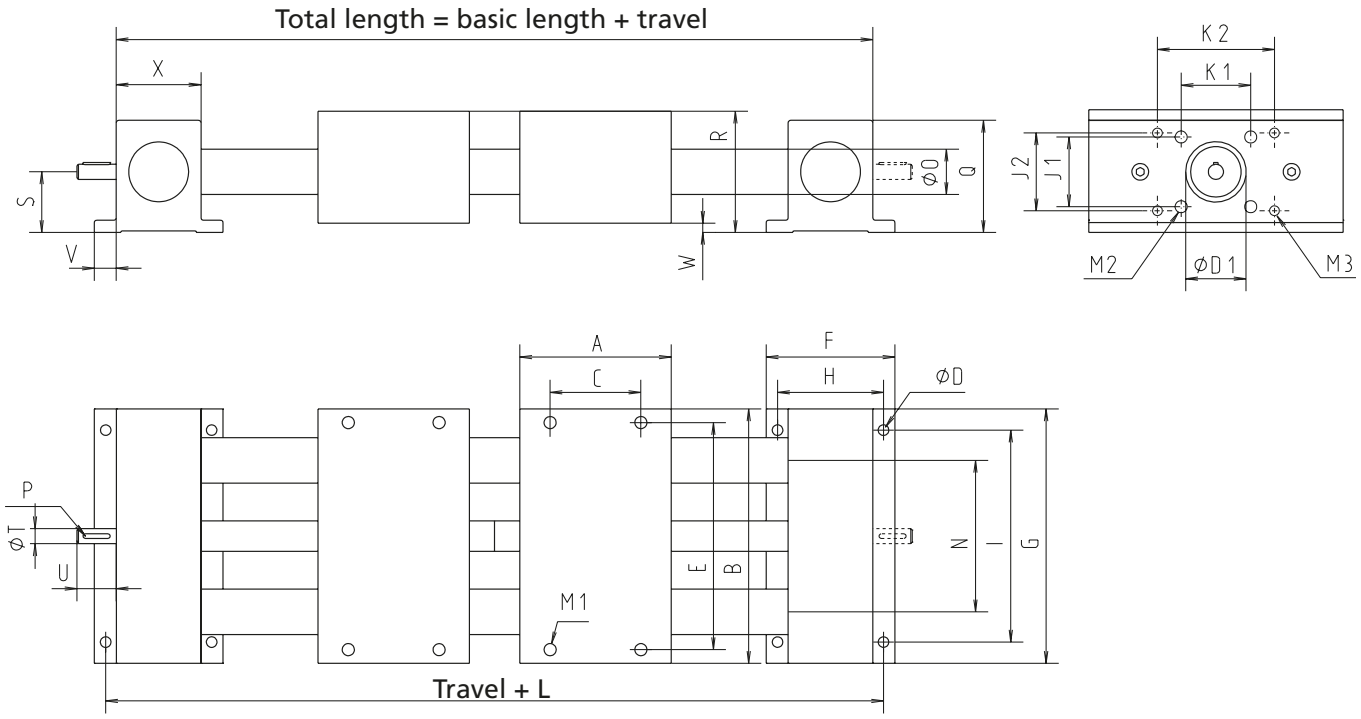


[mm]

| M1 | M2 | M3 | N | Ø O | P | Q | R | S | Ø T | U | V | W | X | Max. travel | Mass [kg] | |
|---|---|---|---|---|---|---|---|---|---|---|---|---|---|---|---|---|
| | | | | | | | | | | | | | | | Basic length | per 100 mm travel |
| M6-16 deep | M6-12 deep | M4-10 deep | 80 | 20 | 2 x 2 x 20 | 58 | 60 | 30 | 8 | 26 | 14 | 2 | 42 | 1200 | 6.7 | 0.59 |
| M8-16 deep | M8-12 deep | M5-12 deep | 100 | 30 | 3 x 3 x 20 | 74 | 80 | 40 | 10 | 38 | 14.5 | 10 | 56 | 2200 | 12.3 | 1.30 |
| M8-16 deep | M8-15 deep | M6-14 deep | 120 | 40 | 4 x 4 x 25 | 92 | 100 | 50 | 12 | 38 | 20 | 12 | 70 | 2100 | 24.2 | 2.16 |

# COPAS – Versions

**Order information:**

- Please specify total travel when placing an order
- Second free-running carriage available on request
- Bellows version available as optional extra
- Longer travel lengths on request

**Version**

- Horizontal actuator
- *Split* screw

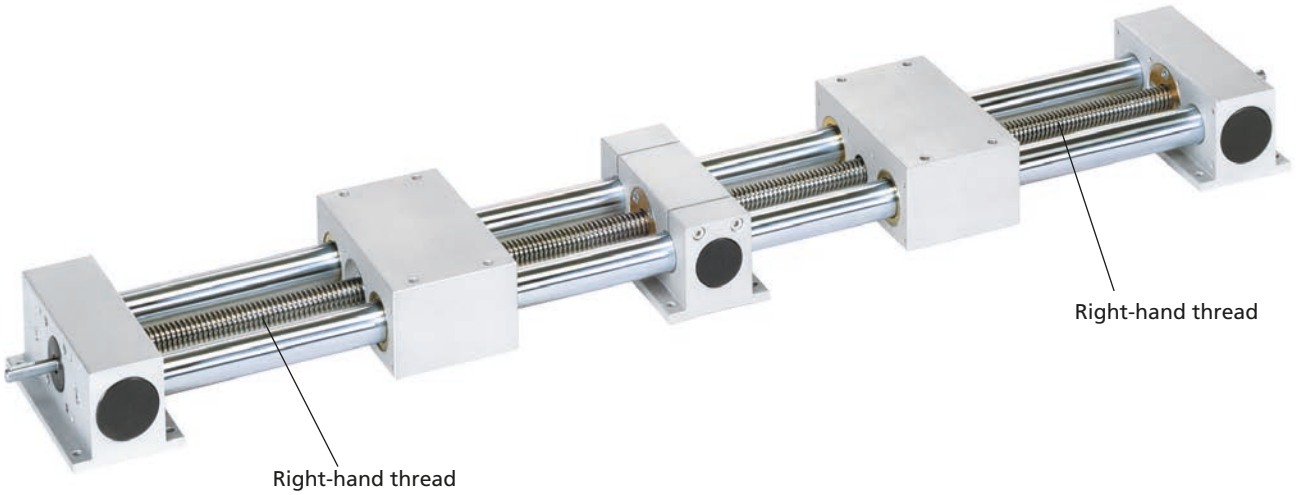


| Code No. | Type | Screw | Basic length | A | B | C | Ø D | Ø D1 | E | F | G | H | I | J1 | J2 | K1 | K2 | L |
|---|---|---|---|---|---|---|---|---|---|---|---|---|---|---|---|---|---|---|
| **ACME screw** | | | | | | | | | | | | | | | | | | |
| 7432034 | TR-HG 20 | 14 x 3 | 362 | 90 | 136 | 50 | 7 | 30 | 120 | 70 | 136 | 56 | 110 | 30 | 37 | 40 | 60 | 376 |
| 7433034 | TR-HG 30 | 20 x 4 | 426 | 100 | 168 | 60 | 7 | 40 | 150 | 85 | 168 | 70 | 140 | 46 | 48 | 46 | 77 | 440 |
| 7434034 | TR-HG 40 | 20 x 4 | 540 | 125 | 204 | 100 | 9 | 40 | 170 | 110 | 204 | 90 | 170 | 46 | 55 | 46 | 87 | 560 |
| **Ball screw** | | | | | | | | | | | | | | | | | | |
| 7532034 | KG-HG 20 | 16 x 5 | 362 | 90 | 136 | 50 | 7 | 30 | 120 | 70 | 136 | 56 | 110 | 30 | 37 | 40 | 60 | 376 |
| 7533034 | KG-HG 30 | 16 x 5 | 426 | 100 | 168 | 60 | 7 | 40 | 150 | 85 | 168 | 70 | 140 | 46 | 48 | 46 | 77 | 440 |
| 7534034 | KG-HG 40 | 20 x 5 | 540 | 125 | 204 | 100 | 9 | 40 | 170 | 110 | 204 | 90 | 170 | 46 | 55 | 46 | 87 | 560 |

_ _ _ _ Total length = basic length + travel [mm]

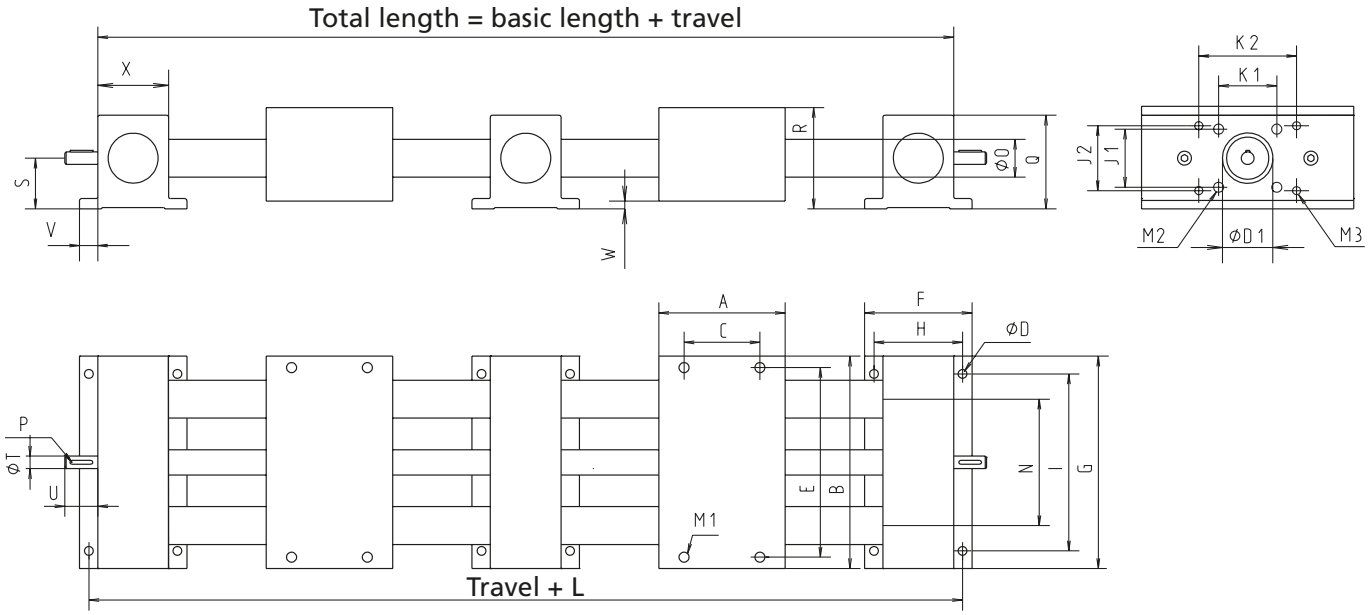


[mm]

| M1 | M2 | M3 | N | Ø O | P | Q | R | S | Ø T | U | V | W | X | Max. travel/end | Mass [kg] | |
|---|---|---|---|---|---|---|---|---|---|---|---|---|---|---|---|---|
| | | | | | | | | | | | | | | | Basic length | per 100 mm travel |
| M6-16 deep | M6-12 deep | M4-10 deep | 80 | 20 | 2 x 2 x 20 | 58 | 60 | 30 | 8 | 26 | 14 | 2 | 42 | 575 | 8.2 | 0.59 |
| M8-16 deep | M8-12 deep | M5-12 deep | 100 | 30 | 3 x 3 x 20 | 74 | 80 | 40 | 10 | 38 | 14.5 | 10 | 56 | 1075 | 15.2 | 1.30 |
| M8-16 deep | M8-15 deep | M6-14 deep | 120 | 40 | 4 x 4 x 25 | 92 | 100 | 50 | 12 | 38 | 20 | 12 | 70 | 1025 | 30.0 | 2.16 |
| | | | | | | | | | | | | | | | | |
| M6-16 deep | M6-12 deep | M4-10 deep | 80 | 20 | 2 x 2 x 20 | 58 | 60 | 30 | 8 | 26 | 14 | 2 | 42 | 825 | 8.4 | 0.62 |
| M8-16 deep | M8-12 deep | M5-12 deep | 100 | 30 | 3 x 3 x 20 | 74 | 80 | 40 | 10 | 38 | 14.5 | 10 | 56 | 825 | 15.1 | 1.23 |
| M8-16 deep | M8-15 deep | M6-14 deep | 120 | 40 | 4 x 4 x 25 | 92 | 100 | 50 | 12 | 38 | 20 | 12 | 70 | 1025 | 30.0 | 2.17 |

# COPAS – Versions

**Order information:**

- Second free-running carriage available on request
- Bellows version available as optional extra
- Longer travel lengths on request

**Version**

- Vertical actuator
- Right *or* lefthand thread

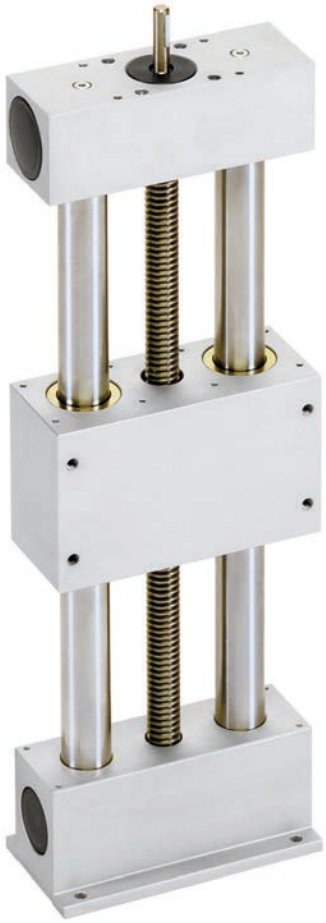

| Code No. | Type | Screw | Basic length | A | B | C | Ø D | Ø D1 | E | F | G | H | I | J1 | J2 | K1 | K2 |
|---|---|---|---|---|---|---|---|---|---|---|---|---|---|---|---|---|---|
| **ACME screw** | | | | | | | | | | | | | | | | | |
| 74_2014 | TR-VO 20 | 14 x 3 | 190 | 90 | 136 | 50 | 7 | 30 | 120 | 70 | 136 | 56 | 110 | 30 | 37 | 40 | 60 |
| 74_3014 | TR-VO 30 | 20 x 4 | 230 | 100 | 168 | 60 | 7 | 40 | 150 | 85 | 168 | 70 | 140 | 46 | 48 | 46 | 77 |
| 74_4014 | TR-VO 40 | 20 x 4 | 287 | 125 | 204 | 100 | 9 | 40 | 170 | 110 | 204 | 90 | 170 | 46 | 55 | 46 | 87 |
| **Ball screw** | | | | | | | | | | | | | | | | | |
| 7552014 | KG-VO 20 | 16 x 5 | 190 | 90 | 136 | 50 | 7 | 30 | 120 | 70 | 136 | 56 | 110 | 30 | 37 | 40 | 60 |
| 7553014 | KG-VO 30 | 16 x 5 | 230 | 100 | 168 | 60 | 7 | 40 | 150 | 85 | 168 | 70 | 140 | 46 | 48 | 46 | 77 |
| 7554014 | KG-VO 40 | 20 x 5 | 287 | 125 | 204 | 100 | 9 | 40 | 170 | 110 | 204 | 90 | 170 | 46 | 55 | 46 | 87 |

7554014

_ _ _ _ Total length = basic length + travel [mm]

**Version:**
5 = righthand thread
6 = lefthand thread

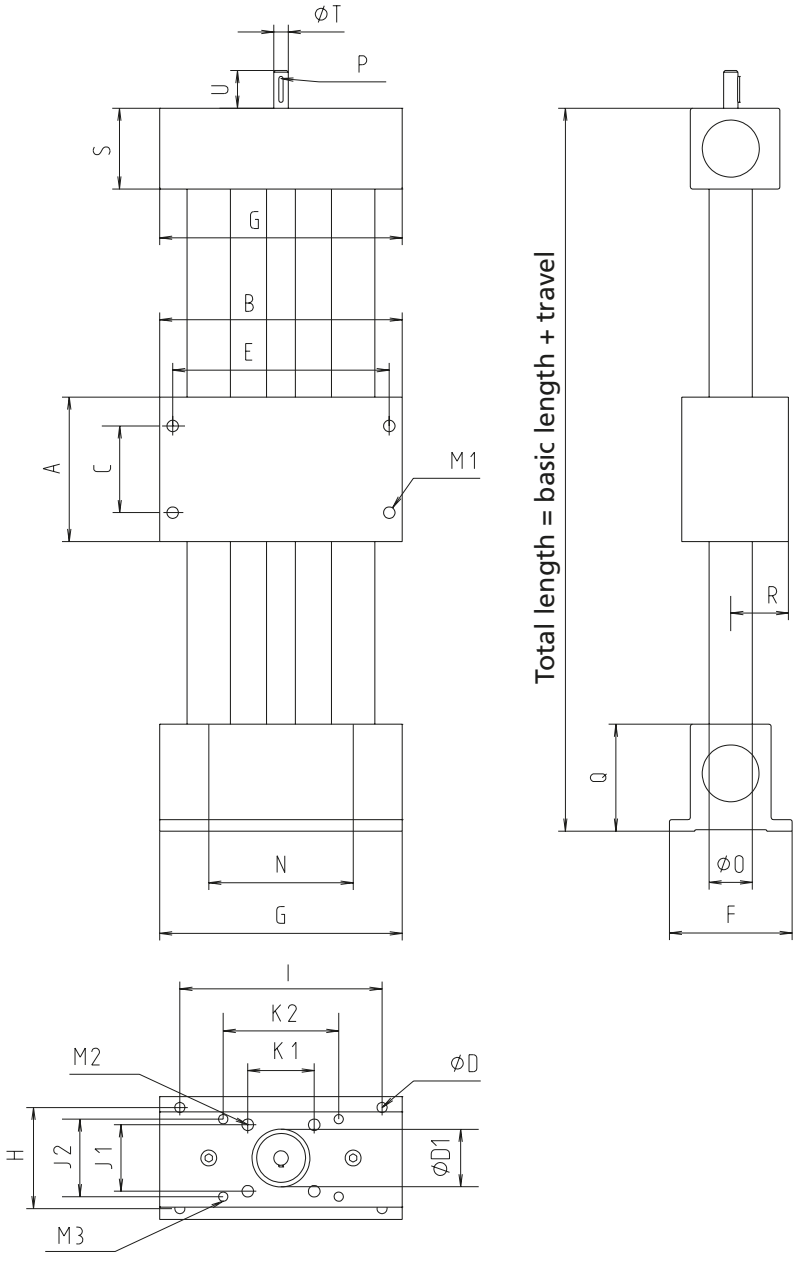


[mm]

| M1 | M2 | M3 | N | Ø O | P | Q | R | S | Ø T | U | Max. travel | Mass [kg] | |
|---|---|---|---|---|---|---|---|---|---|---|---|---|---|
| | | | | | | | | | | | | Basic length | per 100 mm travel |
| M6-16 deep | M6-12 deep | M4-10 deep | 80 | 20 | 2 x 2 x 20 | 58 | 30 | 42 | 8 | 26 | 1300 | 4.2 | 0.59 |
| M8-16 deep | M8-12 deep | M5-12 deep | 100 | 30 | 3 x 3 x 20 | 74 | 40 | 56 | 10 | 38 | 2250 | 8.2 | 1.30 |
| M8-16 deep | M8-15 deep | M6-14 deep | 120 | 40 | 4 x 4 x 25 | 92 | 50 | 70 | 12 | 38 | 2200 | 16.2 | 2.16 |
| | | | | | | | | | | | | | |
| M6-16 deep | M6-12 deep | M4-10 deep | 80 | 20 | 2 x 2 x 20 | 58 | 30 | 42 | 8 | 26 | 1800 | 4.3 | 0.62 |
| M8-16 deep | M8-12 deep | M5-12 deep | 100 | 30 | 3 x 3 x 20 | 74 | 40 | 56 | 10 | 38 | 1750 | 8.2 | 1.23 |
| M8-16 deep | M8-15 deep | M6-14 deep | 120 | 40 | 4 x 4 x 25 | 92 | 50 | 70 | 12 | 38 | 2200 | 16.3 | 2.17 |

**Order information:**

- Please specify total travel when placing an order
- Second free-running carriage available on request
- Bellows version available as optional extra
- Longer travel lengths on request

**Version**

- Vertical actuator
- Right *and* lefthand thread




| Code No. | Type | Screw | Basic length | A | B | C | Ø D | Ø D1 | E | F | G | H | I | J1 | J2 | K1 | K2 |
|---|---|---|---|---|---|---|---|---|---|---|---|---|---|---|---|---|---|
| ACME screw | | | | | | | | | | | | | | | | | |
| 74720_4 | TR-VU 20 | 14 x 3 | 280 | 90 | 136 | 50 | 7 | 30 | 120 | 70 | 136 | 56 | 110 | 30 | 37 | 40 | 60 |
| 74730_4 | TR-VU 30 | 20 x 4 | 330 | 100 | 168 | 60 | 7 | 40 | 150 | 85 | 168 | 70 | 140 | 46 | 48 | 46 | 77 |
| 74740_4 | TR-VU 40 | 20 x 4 | 412 | 125 | 204 | 100 | 9 | 40 | 170 | 110 | 204 | 90 | 170 | 46 | 55 | 46 | 87 |

74740_4

_ _ _ _ Total length = basic length + travel [mm]

**Version:**
1 = 1 drive shaft at righthand thread end
2 = 1 drive shaft at lefthand thread end

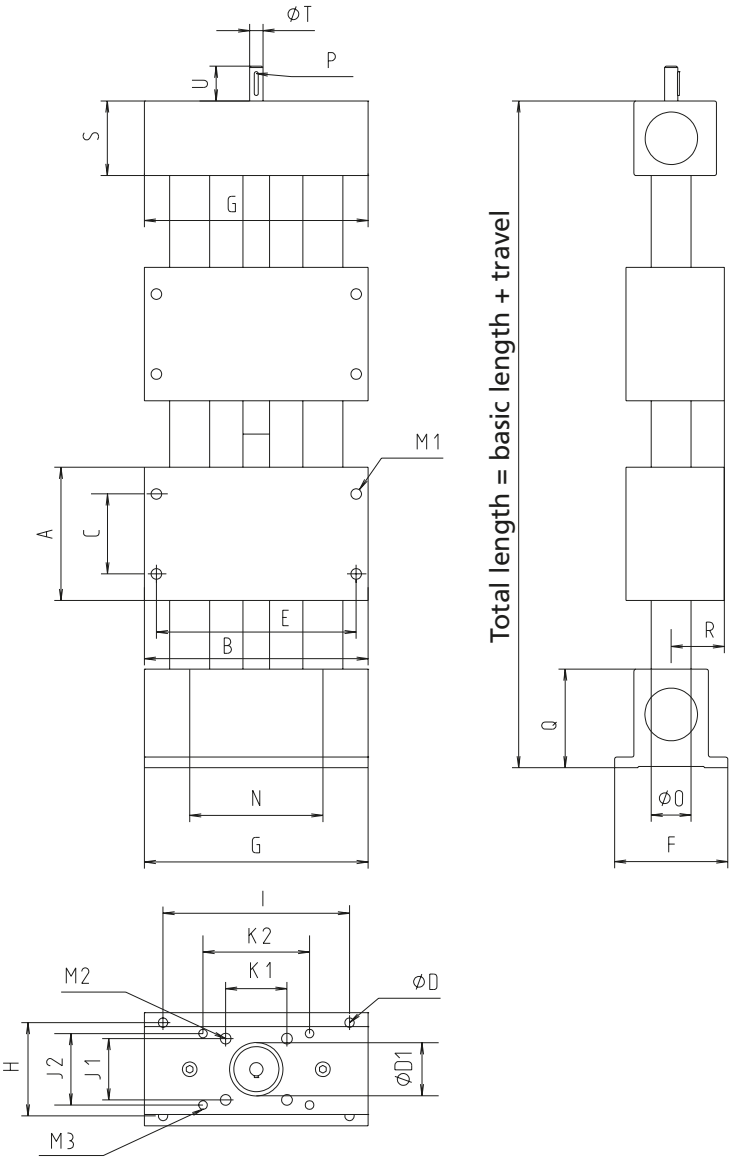


[mm]

| M1 | M2 | M3 | N | Ø O | P | Q | R | S | Ø T | U | Max. travel | Mass [kg] | |
|---|---|---|---|---|---|---|---|---|---|---|---|---|---|
| | | | | | | | | | | | | Basic length | per 100 mm travel |
| M6-16 deep | M6-12 deep | M4-10 deep | 80 | 20 | 2 x 2 x 20 | 58 | 30 | 42 | 8 | 26 | 1200 | 5.9 | 0.59 |
| M8-16 deep | M8-12 deep | M5-12 deep | 100 | 30 | 3 x 3 x 20 | 74 | 40 | 56 | 10 | 38 | 2150 | 10.5 | 1.30 |
| M8-16 deep | M8-15 deep | M6-14 deep | 120 | 40 | 4 x 4 x 25 | 92 | 50 | 70 | 12 | 38 | 2100 | 17.2 | 2.16 |

**Order information:**

- The Y-axis is a moving axis (the carriage is stationary, the axis is moving!)
- You need to check the moments My for the Y-axis and Mx for the X-axis (see page 135)

**Version**

- Crossing
- Horizontal
- Right *or* lefthand thread

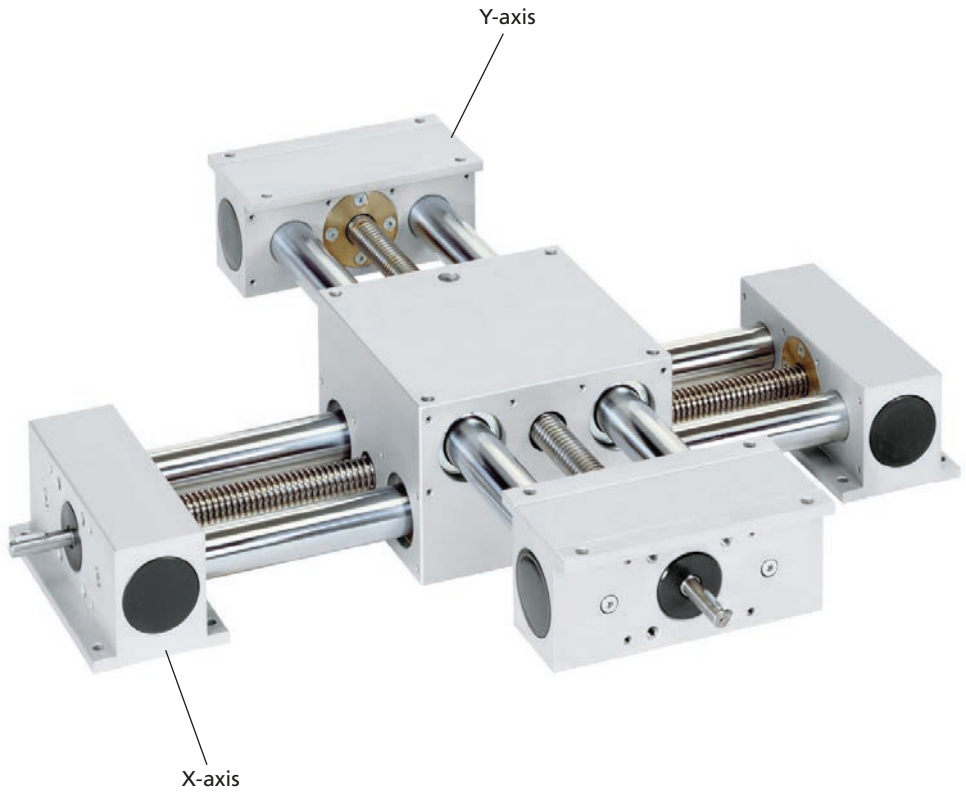


| Code No. | Type | Screw | Basic length | A | B | C | Ø D | Ø D1 | E | F | G | H | I | J1 | J2 | K1 | K2 |
|---|---|---|---|---|---|---|---|---|---|---|---|---|---|---|---|---|---|
| **ACME screw** | | | | | | | | | | | | | | | | | |
| 76_20_40_ _ _ _ | TR-K 20 | 14 x 3 | 248 | 136 | 136 | 120 | 7 | 30 | 120 | 70 | 136 | 56 | 110 | 30 | 37 | 40 | 60 |
| 76_30_40_ _ _ _ | TR-K 30 | 20 x 4 | 309 | 168 | 168 | 150 | 7 | 40 | 150 | 85 | 168 | 70 | 140 | 46 | 48 | 46 | 77 |
| 76_40_40_ _ _ _ | TR-K 40 | 20 x 4 | 384 | 204 | 204 | 180 | 9 | 40 | 170 | 110 | 204 | 90 | 170 | 46 | 55 | 46 | 87 |
| **Ball screw** | | | | | | | | | | | | | | | | | |
| 77020_40_ _ _ _ | KG-K 20 | 16 x 5 | 248 | 136 | 136 | 120 | 7 | 30 | 120 | 70 | 136 | 56 | 110 | 30 | 37 | 40 | 60 |
| 77030_40_ _ _ _ | KG-K 30 | 16 x 5 | 309 | 168 | 168 | 150 | 7 | 40 | 150 | 85 | 168 | 70 | 140 | 46 | 48 | 46 | 77 |
| 77040_40_ _ _ _ | KG-K 40 | 20 x 5 | 384 | 204 | 204 | 180 | 9 | 40 | 170 | 110 | 204 | 90 | 170 | 46 | 55 | 46 | 87 |

_ _ _ _ Total length X-axis (total length + travel) [mm]
_ _ _ _ Total length Y-axis (total length + travel) [mm]

**Note:** Please specify total length of X- **and** Y-axis when placing an order

**Drive shafts:**
1 = 1 drive shaft
3 = 2 drive shafts

**Version:**
0 = righthand thread
1 = lefthand thread

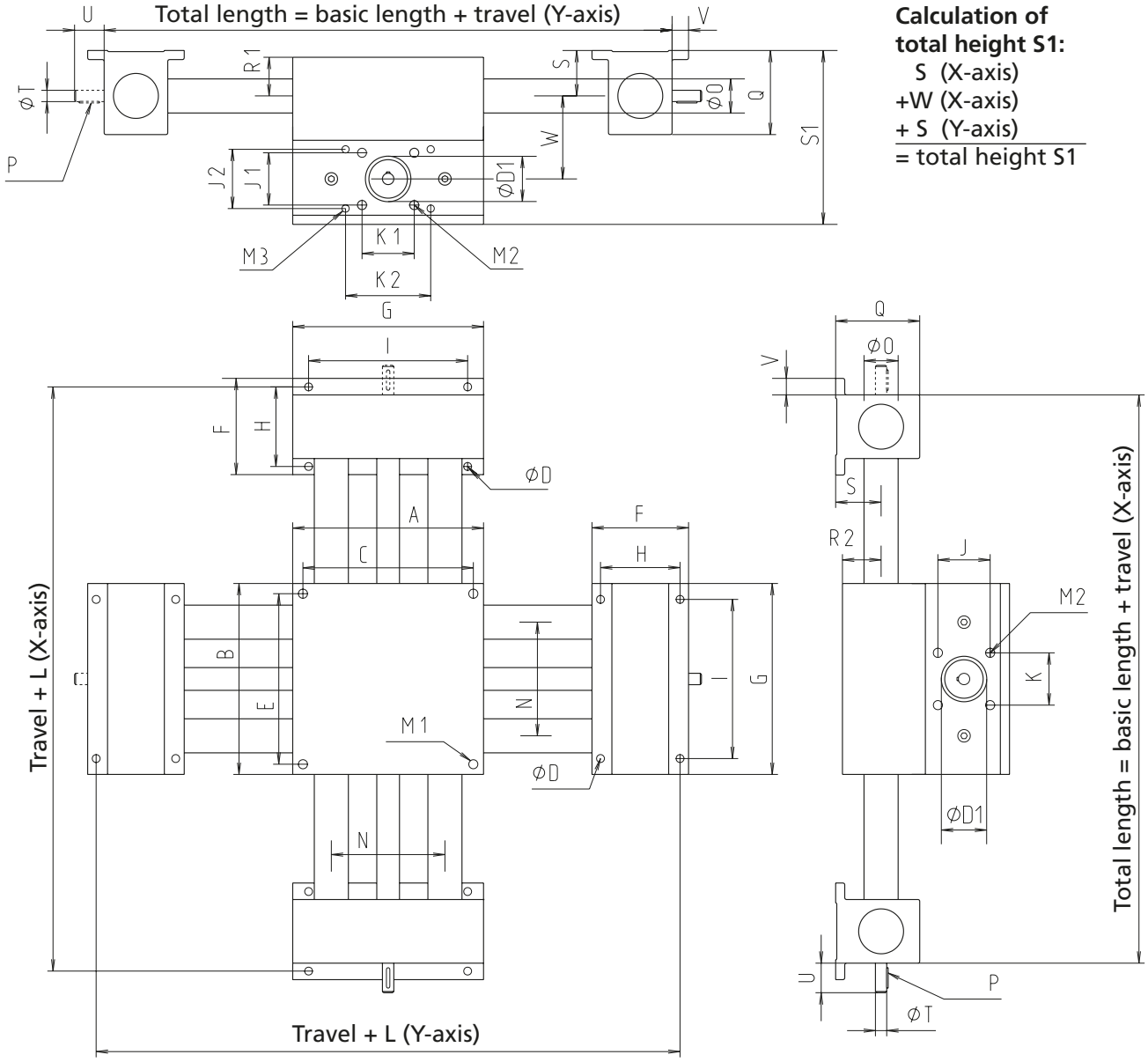


**Calculation of total height S1:**

S (X-axis)
+W (X-axis)
+ S (Y-axis)
= total height S1

[mm]

| L | M1 | M2 | M3 | N | Ø O | P | Q | R1 | R2 | S | Ø T | U | V | W | Mass [kg] | |
|---|---|---|---|---|---|---|---|---|---|---|---|---|---|---|---|---|
| | | | | | | | | | | | | | | | Basic length for crossing | per 100 mm travel |
| 262 | M6-16 deep | M6-12 deep | M4-10 deep | 80 | 20 | 2 x 2 x 20 | 58 | 28 | 28 | 30 | 8 | 26 | 14 | 45 | 10.0 for 20/20 | 0.59 |
| 323 | M8-16 deep | M8-12 deep | M5-12 deep | 100 | 30 | 3 x 3 x 20 | 74 | 32 | 32 | 40 | 10 | 38 | 14.5 | 50 | 18.3 for 30/30 | 1.30 |
| 404 | M8-16 deep | M8-15 deep | M6-14 deep | 120 | 40 | 4 x 4 x 25 | 92 | 35 | 38 | 50 | 12 | 38 | 20 | 65 | 34.4 for 40/40 | 2.16 |
| | | | | | | | | | | | | | | | | |
| 262 | M6-16 deep | M6-12 deep | M4-10 deep | 80 | 20 | 2 x 2 x 20 | 58 | 28 | 28 | 30 | 8 | 26 | 14 | 45 | 10.0 for 20/20 | 0.62 |
| 323 | M8-16 deep | M8-12 deep | M5-12 deep | 100 | 30 | 3 x 3 x 20 | 74 | 32 | 32 | 40 | 10 | 38 | 14.5 | 50 | 18.3 for 30/30 | 1.23 |
| 404 | M8-16 deep | M8-15 deep | M6-14 deep | 120 | 40 | 4 x 4 x 25 | 92 | 35 | 38 | 50 | 12 | 38 | 20 | 65 | 34.4 for 40/40 | 2.17 |

## Connecting plate for cross table

- Connecting plate between two crossing axes
- The Y-axis is a fixed axis (the axis is stationary, the carriage is moving)

**Material:** Aluminium
Precision-milled surface



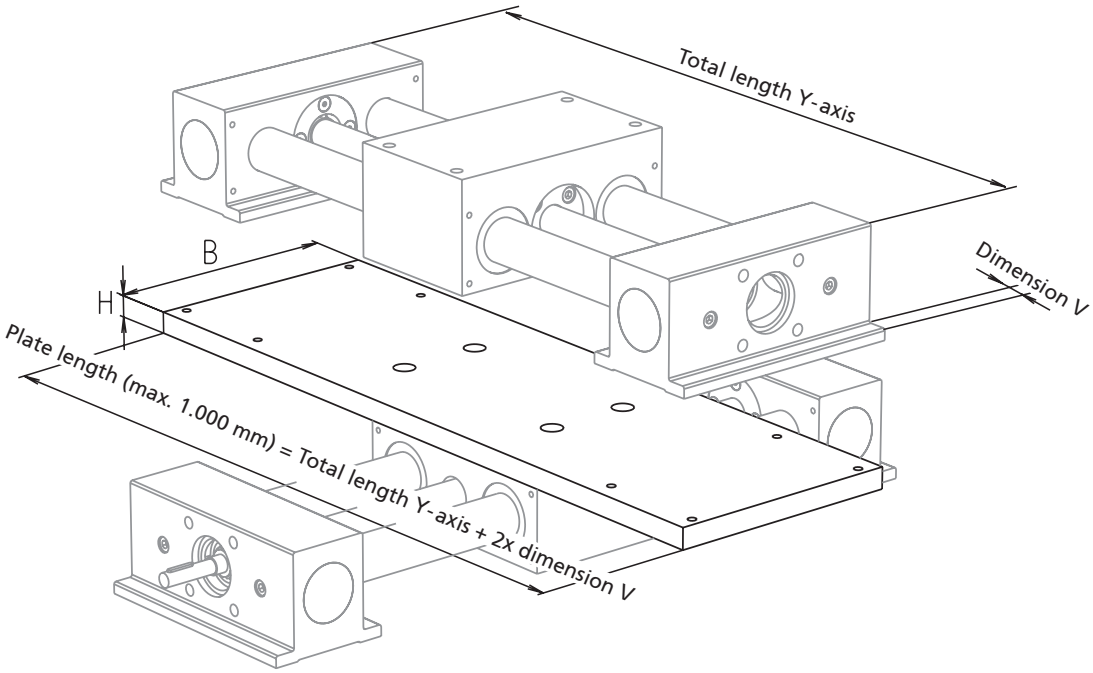


[mm]

| Code No. | Type | B | H | V |
|---|---|---|---|---|
| 94382_ _ _ _ _ | 20 on 20 | 136 | 15 | 14 |
| 94383_ _ _ _ _ | 30 on 30 | 168 | 15 | 14,5 |
| 94384_ _ _ _ _ | 40 on 40 | 204 | 15 | 20 |

Total length Y-axis [mm]

**Sample order:**
COPAS 20 horizontal
500 mm Total length Y-axis

Code No. + Total length Y-axis (without 2x dimension V)
94382 + 500 mm

9438200500

**Hinweis:**
Plate length = Total length Y-axis + 2x dimension V

## Handwheel

**Material:** Die-cast aluminium
Black powder-coating



Ø 140



Ø 80-100

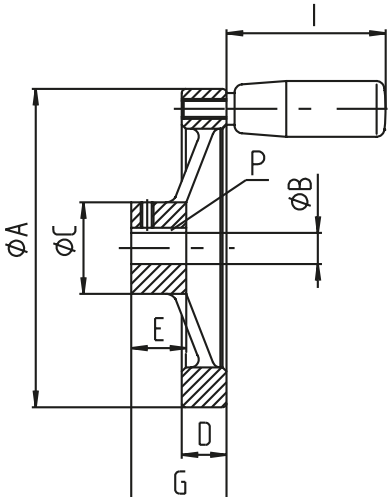


[mm]

| Code No. | Type | A | B | C | D | E | G | P | I |
|---|---|---|---|---|---|---|---|---|---|
| 90903 | 20 | 80 | 8 | 23 | 11 | 17 | 35 | 2 x 2 | 52 |
| 90913 | 20 | 100 | 8 | 28 | 14 | 17 | 30 | 2 x 2 | 52 |
| 90904 | 30 | 100 | 10 | 28 | 14 | 17 | 30 | 3 x 3 | 52 |
| 90915 | 40 | 100 | 12 | 28 | 14 | 17 | 30 | 4 x 4 | 52 |
| 90905 | 40 | 140 | 12 | 36 | 16.5 | 19 | 36 | 4 x 4 | 52 |

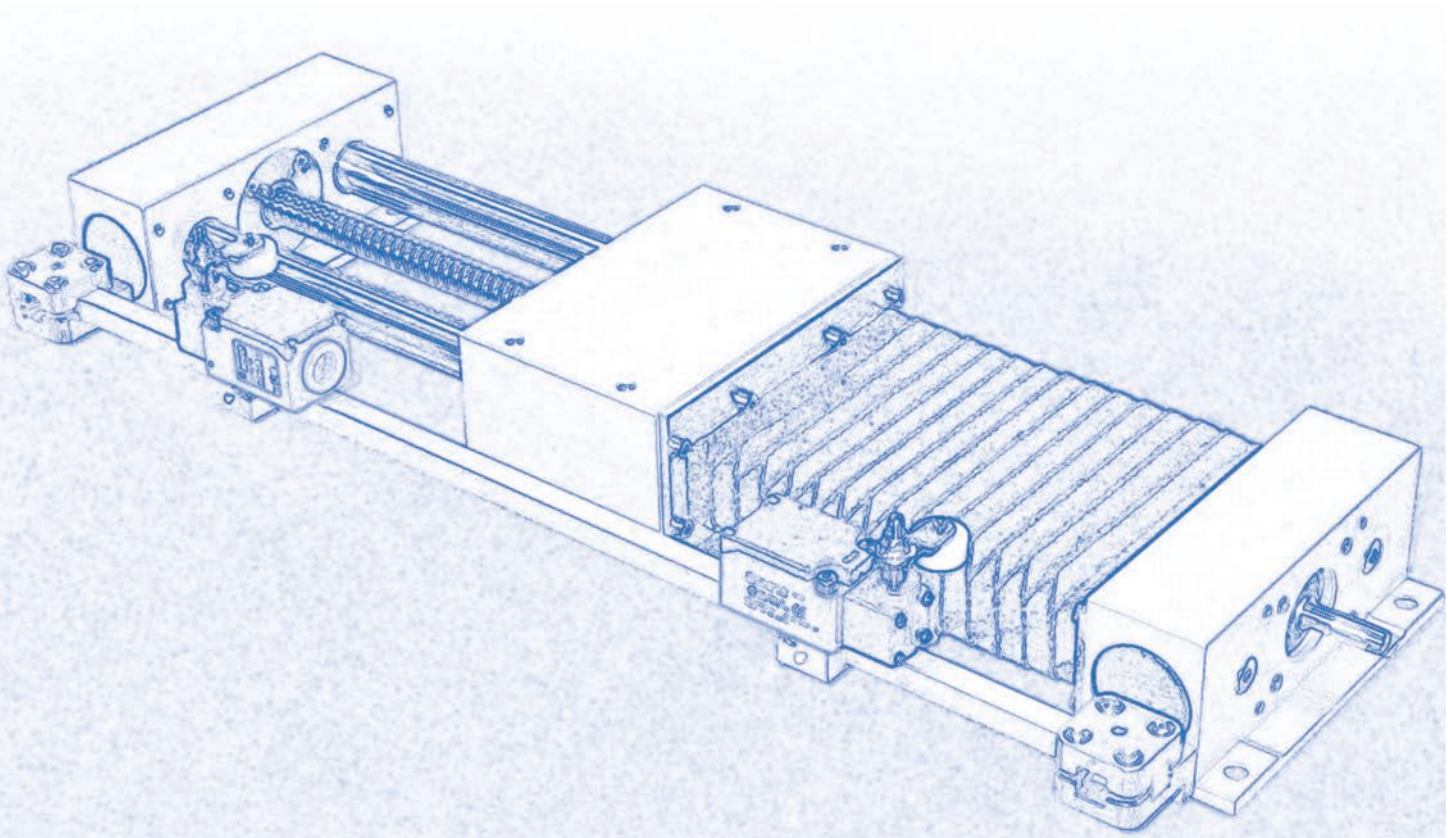

## Motor adapter kit for RK AC servomotors

- Servomotors from the RK standard range can be easily connected
- Complete motor adapter kits manufactured to your specifications on request

**Scope of delivery:**
Motor adapter kit, elastomer coupling and fixation material

| Type | Servo motors without gearbox | |
|---|---|---|
| | RK-AC 240 | RK-AC 470 |
| Angular gear system 1 and 4 for COPAS 20-40 | 949130 | 949131 |
| Angular gear system 2 and 3 for COPAS 20-40 | 949139 | 949140 |

## Selection table Motor adaptor/coupling

| Type | Servo motors without gear | | | Three-phase motor | |
|---|---|---|---|---|---|
| | RK-AC118 | RK-AC240 | RK-AC210/470 | 90/120W | 180/250 W |
| COPAS 20 | 949218 | 949328 | 949327 | 949623 | – |
| | 911430 0811 | 911940 0814 | 911940 0819 | 911940 0812 | – |
| COPAS 30 | 949220 | 949238 | 949084 | 949614 | 949048 |
| | 911430 1011 | 911430 1014 | 911430 1019 | 911430 1012 | 911430 1014 |
| COPAS 40 | 949220 | 949238 | 949051 | 949614 | 949048 |
| | 911430 1112 | 911430 1214 | 911940 1920 | 911430 1212 | 911430 1214 |

**Note:** For further details on motor versions, please refer to the chapter **"Motors and controls"**

## Motor adaptor

- Simple assembly on linear unit and motor
- Exact fit due to centering shoulders

**Material:** Aluminium, black

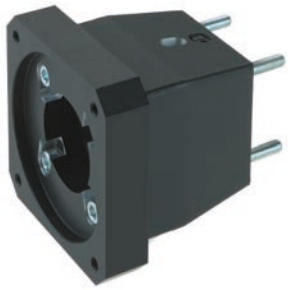

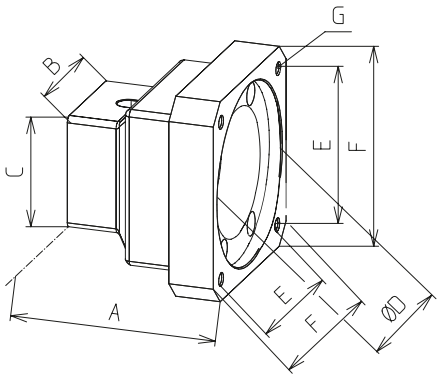


[mm]

| Code No. | Type | A | B | C | D | E | F | G |
|---|---|---|---|---|---|---|---|---|
| 949218 | 20 | 64 | 53,5 | 53,5 | 60 | 53 | 70 | M5 |
| 949328 | 20 | 81 | 53,5 | 53,5 | 80 | 70,7 | 90 | M6 |
| 949327 | 20 | 91 | 53,5 | 53,5 | 95 | 81,3 | 115 | M8 |
| 949262 | 20 | 66 | 53,5 | 53,5 | 73 | 70 | 90 | M6 |
| 949623 | 20 | 79 | 53,5 | 53,5 | 50 | 65 | 80 | M5 |
| 949220 | 30 | 74 | 60 | 60 | 60 | 53 | 70 | M5 |
| 949238 | 30 | 83 | 60 | 60 | 80 | 70,7 | 90 | M6 |
| 949084 | 30 | 91 | 60 | 60 | 95 | 81,3 | 115 | M8 |
| 949264 | 30 | 83 | 60 | 60 | 73 | 70 | 90 | M6 |
| 949614 | 30 | 83 | 60 | 60 | 50 | 46 | 80 | M5 |
| 949048 | 30 | 83 | 60 | 60 | 80 | 100 | Ø120 | Ø6,6 |
| 949220 | 40 | 74 | 60 | 60 | 60 | 53 | 70 | M5 |
| 949238 | 40 | 83 | 60 | 60 | 80 | 70,7 | 90 | M6 |
| 949051 | 40 | 94 | 60 | 60 | 95 | 81,3 | 115 | M8 |
| 949264 | 40 | 83 | 60 | 60 | 73 | 70 | 90 | M6 |
| 949614 | 40 | 83 | 60 | 60 | 50 | 46 | 80 | M5 |
| 949048 | 40 | 83 | 60 | 60 | 80 | 100 | Ø120 | Ø6,6 |

## Coupling



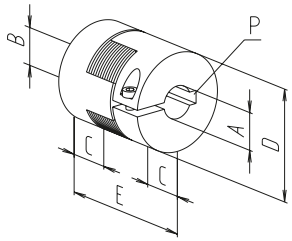


[mm]

| Code No. | ØA | ØB | C | ØD | E | P | Torque [Nm] with feather key | Torque [Nm] without feather key |
|---|---|---|---|---|---|---|---|---|
| 9109200895 | 8 | 9,5 | 10 | 20 | 30 | 2x2 / – | 5 | 3 |
| 9114300811 | 8 | 11 | 11 | 30 | 35 | 2x2 / 4x4 | 12 | 6 |
| 9114309510 | 9,5 | 10 | 11 | 30 | 35 | – / 3x3 | 12 | 6 |
| 9114309512 | 9,5 | 12 | 11 | 30 | 35 | – / 4x4 | 12 | 6 |
| 9114301011 | 10 | 11 | 11 | 30 | 35 | 3x3 / 4x4 | 12 | 6 |
| 9114301012 | 10 | 12 | 11 | 30 | 35 | 3x3 / 4x4 | 12 | 6 |
| 9114301014 | 10 | 14 | 11 | 30 | 35 | 3x3 / 5x5 | 12 | 6 |
| 9114301019 | 10 | 19 | 11 | 30 | 35 | 3x3 / 6x6 | 12 | 6 |
| 9114301112 | 11 | 12 | 11 | 30 | 35 | 4x4 / 4x4 | 12 | 6 |
| 9114301212 | 12 | 12 | 11 | 30 | 35 | 4x4 / 4x4 | 12 | 6 |
| 9114301214 | 12 | 14 | 11 | 30 | 35 | 4x4 / 5x5 | 12 | 6 |
| 9119400812 | 8 | 12 | 25 | 40 | 65 | 2x2 / 4x4 | 17 | 10 |
| 9119400814 | 8 | 14 | 25 | 40 | 65 | 2x2 / 5x5 | 17 | 10 |
| 9119400819 | 8 | 19 | 25 | 40 | 65 | 2x2 / 6x6 | 17 | 10 |
| 9119401920 | 19 | 20 | 25 | 40 | 65 | 6x6 / 6x6 | 17 | 10 |

**Order information:**

- Reductions 1:1.5, 1:2, 1:3, 1:4 or 1:5 on request

## Angular gear

- Fits all COPAS-actuators
- Can be retrofitted
- Low torsional backlash
- Low noise level
- Spiral toothing

**Scope of delivery:**
Angular gear 1:1,
Fastenings on COPAS-actuators and synchronisation shaft depending on system



## Technical data angular gear

| | For COPAS 20-40 | |
|---|---|---|
| Reduction | | 1:1 |
| Drive speed | $min^{-1}$ | 3000 |
| Torsional backlash at output shaft | arcmin | ≤ 9 |
| Efficiency at full load | % | > 98 |
| Running noise at 1500 rpm | db(A) | ≤ 70 |
| Weight | Kg | 4,5 |
| Surface | | Primer RAL 9005 – black matt |
| Geometric moment of inertia | $Kgcm^2$ | 1,79 |

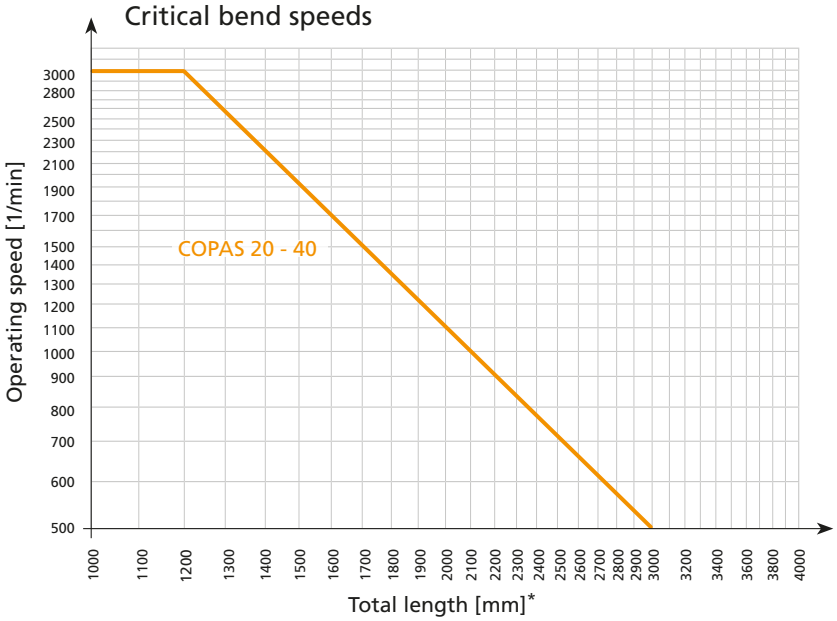


*To calculate the critical bending speed of system 4, use half of the total length.

## Angular gear for COPAS-actuators

System 1

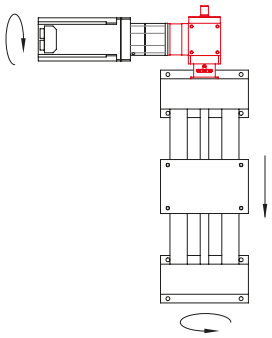

System 2

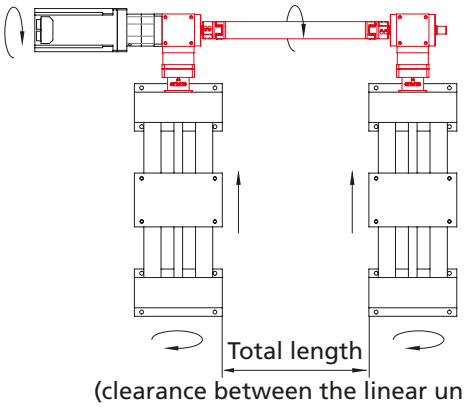


System 3

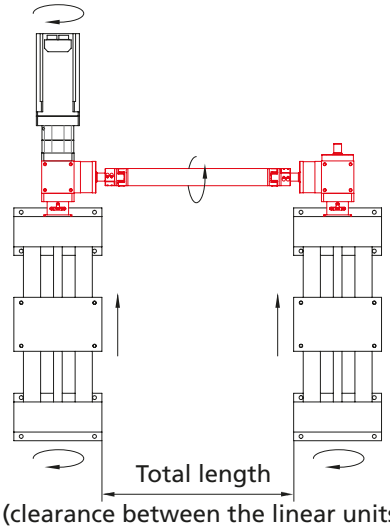


System 4

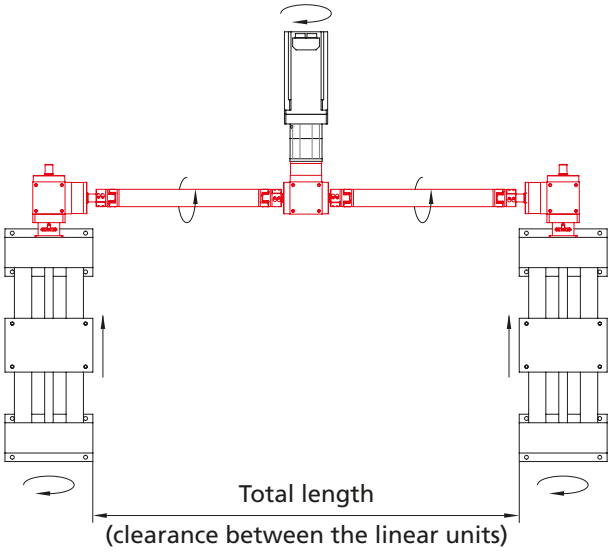


[mm]

| Code No. | Type | Basic length (minimum length) | Max. length (clearance) | Weight [kg] | |
|---|---|---|---|---|---|
| | | | | Basic length | per 100 mm travel |
| 982_ _ A1A0000 | Angular gear system 1 | - | - | 5,5 | - |
| 982_ _ A1B_ _ _ _ | Angular gear system 2 | 123 | 2860 | 10,5 | 0,1 |
| 982_ _ A1C_ _ _ _ | Angular gear system 3 | 228 | 2965 | 10,5 | 0,1 |
| 982_ _ A1D_ _ _ _ | Angular gear system 4 | 500 | 6029 | 15,5 | 0,1 |

Total length (mm)

10 = COPAS 20
11 = COPAS 30
12 = COPAS 40

**Note:**
Additional information, dimensions, accessories and necessary tools for assembling the angular gears can be found

**Chapter:**
Motors and controls

## Positioning indicator

- Max. ambient temperature +80°C
- Figure height 6 mm
- Indication accuracy ± 0.1 mm
- If positioning indicators are fitted, the linear units are delivered exclusively with ball bearings

**Material:** housing polyamide 6 Orange RAL 2004, steel parts, corrosion protected

**Scope of delivery:** positioning indicator, clamping ring, shaft extension and fastenings

**Note:** "rising" and "falling" versions refer to the clockwise rotation of the drive shaft.



Installation position: horizontal

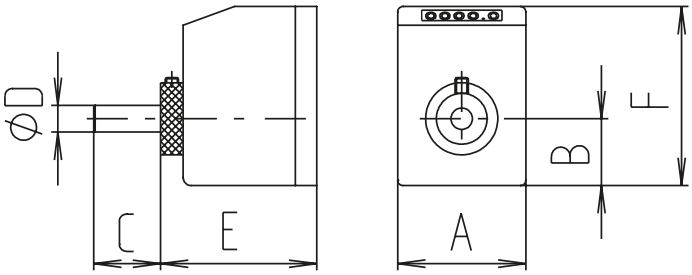




Installation position: vertical

[mm]

| Type | Installation position | Code No. | Version | Code No. | Version* | A | B | C | D | E | F |
|---|---|---|---|---|---|---|---|---|---|---|---|
| 20 | Horizontal | 91022 | 3 mm rising | 91060 | 6 mm rising | 33 | 16.5 | 26 | 8 | 39 | 45 |
| 20 | | 91032 | 3 mm fall. | 910144 | 6 mm fall. | 33 | 16.5 | 26 | 8 | 39 | 45 |
| 20 | Vertical | 91042 | 3 mm rising | 910145 | 6 mm rising | 33 | 16.5 | 26 | 8 | 39 | 45 |
| 20 | | 91052 | 3 mm fall. | 910146 | 6 mm fall. | 33 | 16.5 | 26 | 8 | 39 | 45 |
| 30 | Horizontal | 91007 | 4 mm rising | 910147 | 8 mm rising | 48 | 25 | 28 | 10 | 59 | 67 |
| 30 | | 91017 | 4 mm fall. | 910148 | 8 mm fall. | 48 | 25 | 28 | 10 | 59 | 67 |
| 30 | Vertical | 91027 | 4 mm rising | 910149 | 8 mm rising | 48 | 25 | 28 | 10 | 59 | 67 |
| 30 | | 91037 | 4 mm fall. | 910150 | 8 mm fall. | 48 | 25 | 28 | 10 | 59 | 67 |
| 40 | Horizontal | 91004 | 4 mm rising | 91030 | 8 mm rising | 48 | 25 | 38 | 12 | 59 | 67 |
| 40 | | 91014 | 4 mm fall. | 91039 | 8 mm fall. | 48 | 25 | 38 | 12 | 59 | 67 |
| 40 | Vertical | 91024 | 4 mm rising | 91040 | 8 mm rising | 48 | 25 | 38 | 12 | 59 | 67 |
| 40 | | 91034 | 4 mm fall. | 91041 | 8 mm fall. | 48 | 25 | 38 | 12 | 59 | 67 |

* Version with double lead e.g. for installation on righthand/lefthand thread screws

## Bracket for mechanical limit switch

■ Switch axial adjustable

**Material:** Fixing elements
Gk Al Si 12, square bar made of aluminium, clear anodised

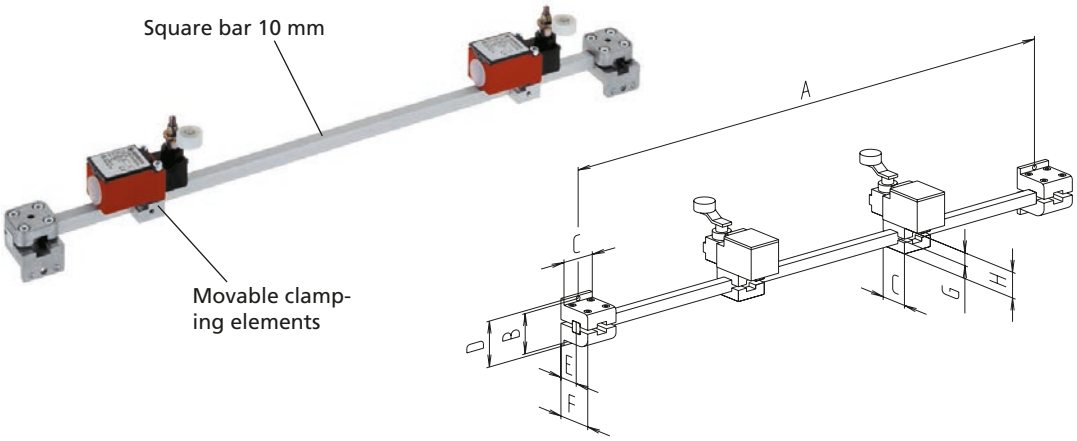


[mm]

| Code No. | Type | Version | A min | B | C | D | E | F | G | H |
|---|---|---|---|---|---|---|---|---|---|---|
| 92901_ _ _ _ | all | 2 x limit switches | 93 | 32 | 31 | 41 | 21 | 36 | 11.5 | 23 |
| 929020_ _ _ _ | all | without switch | 93 | 32 | 31 | 41 | 21 | 36 | 11.5 | 23 |

Total length of linear unit

## Mechanical limit switch

**Material:**
Thermoplastic, fully insulated



| | |
|---|---|
| Max. voltage | 250 V AC |
| Max. switching current | 6 A |
| Max. starting current | 16 A |
| Operating cycles | Max. 6,000/h |
| Mechanical lifetime | 1 x $10^7$ switching cycles |
| Axis lever adjustment | locking by 360° |
| Protection class | IP 65 |
| Ambient temperature | -30°C to +80°C |

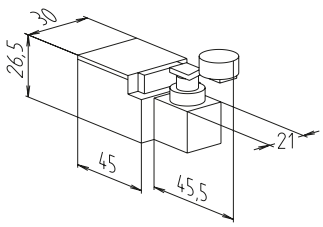


| Code No. | Type | Switching function |
|---|---|---|
| 91905 | 20/30/40 | NC/NO |
| 91907 | Clamping element for mech. limit switch | |

## Bracket for inductive limit switch

- Switch can be moved and fixed axially

**Material:** Fixing elements
Gk Al Si 12, square bar made of aluminium, clear anodised

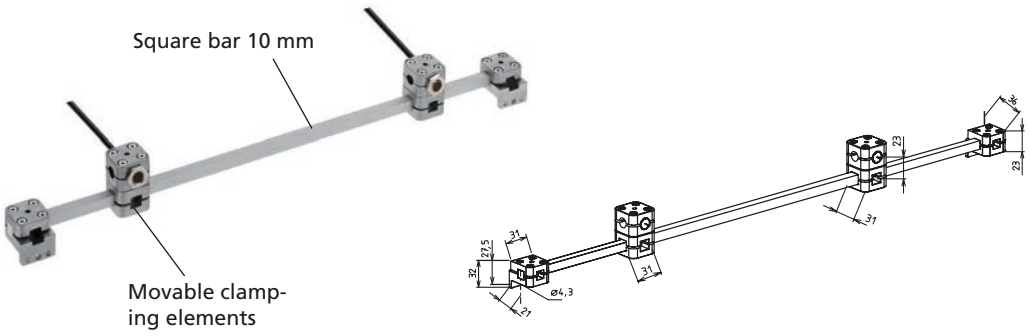


[mm]

| Code No. | Type | Version | Amin | B | C | D | E | F | G | H |
|---|---|---|---|---|---|---|---|---|---|---|
| 92914_ _ _ _ | All | without switch | 93 | 32 | 31 | 41 | 21 | 36 | 23 | 46 |

## Inductive limit switch

- Function indicator (LED)
- Maintenance-free

**Material:** housing - brass, chrome-plated



| Type | 18-60 |
|---|---|
| Voltage | 10 - 30 V DC |
| Max. switching current | 200 mA |
| Operating distance | 4 mm for steel |
| Protection class | IP 67 |
| Ambient temperature | -25°C to +70°C |
| Cable lengths | 2m |

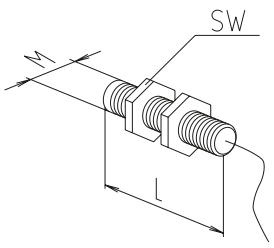


[mm]

| Code No. | Type | Switching function | L | M | Wrench size (SW) |
|---|---|---|---|---|---|
| 92825 | All | Changeover | 50 | M12x1 | 17 |
| 92802 | Clamping element for inductive limit switch | | | | |

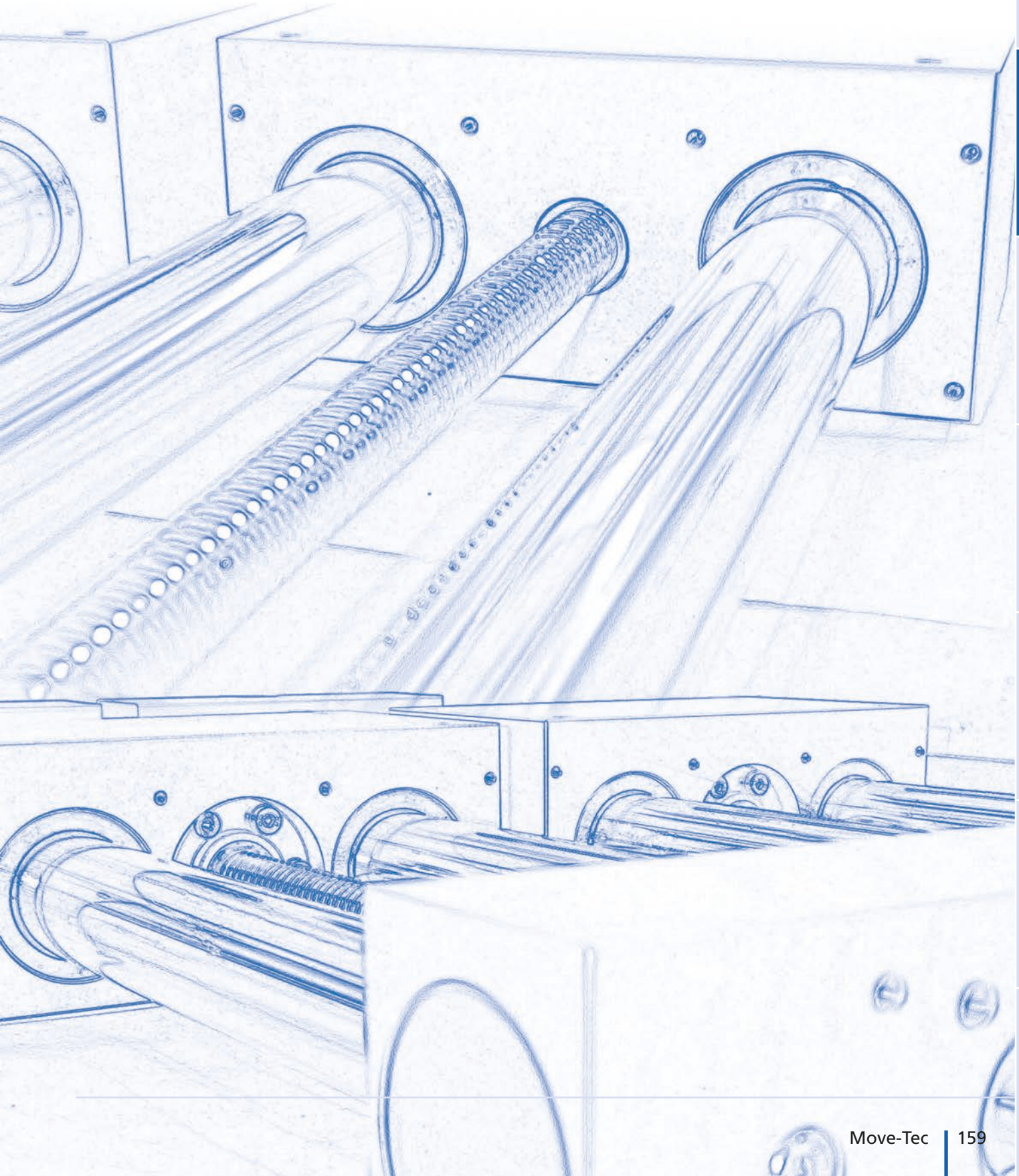

# Profile guide/actuator – PLM

## The small range for positioning small loads

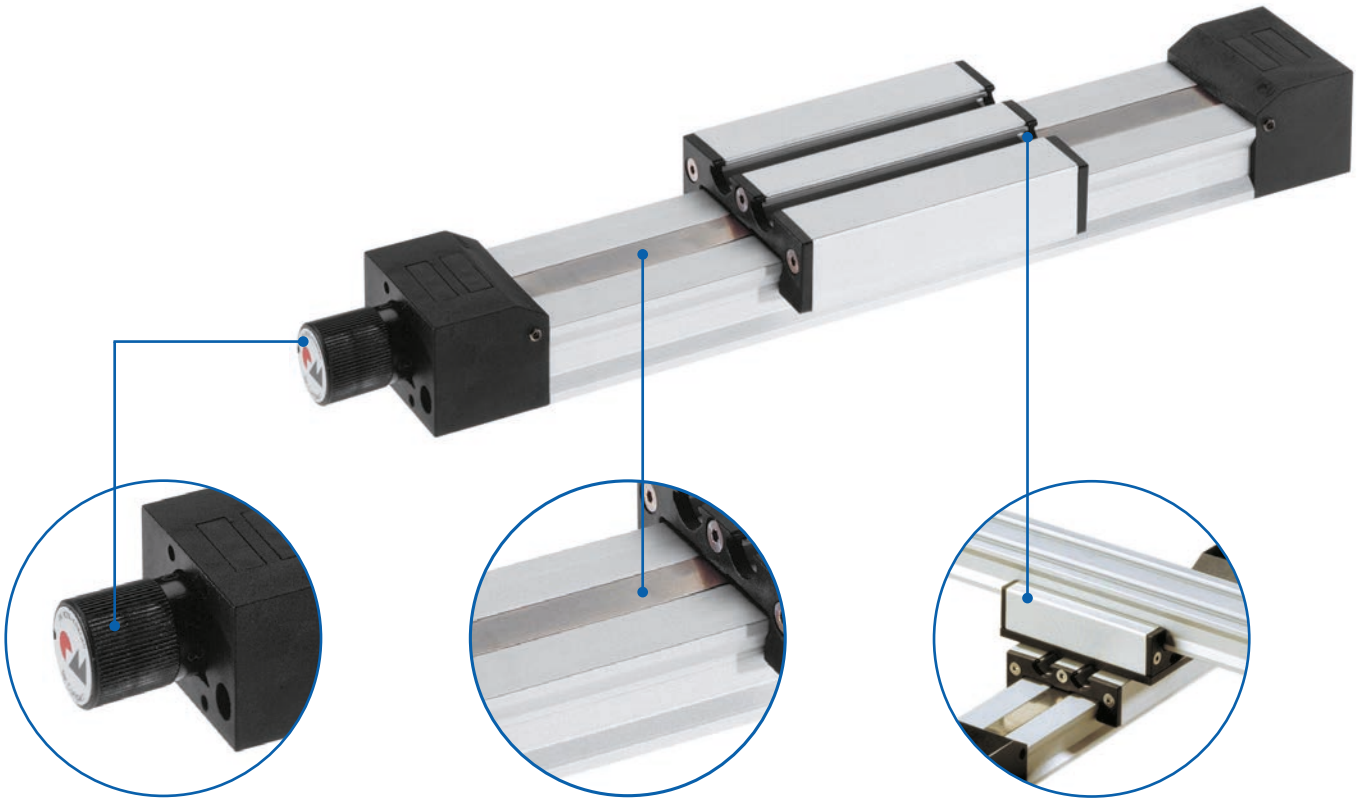

**Control knob with vernier**
✓ Simple adjustment of carriage

**Screw cover**
✓ Protection of drive screw against contamination

**Connecting plates**
✓ Simple connection of 2-axis systems

### Features:

- Covered screw
- Sizes can be combined using standard accessories

### Options:

- Second free-running carriage

# PLM linear unit - Table of contents


## Properties/Technical data

- General information/operating conditions ..... 162
- Load data ..... 163
- Geometric moments of inertia ..... 163

## Versions
(Dimensions, order numbers)

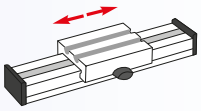

- Guide ..... 164 - 165

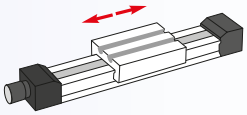

- Right *or* lefthand thread ..... 166 - 167

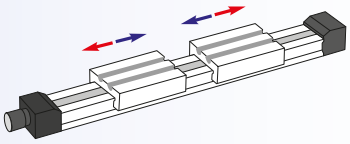

- Right *and* lefthand thread ..... 168 - 169

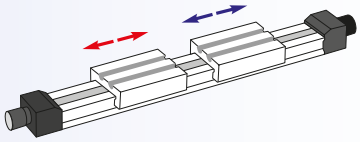

- *Split* screw ..... 170 - 171

## Accessories

**Fixing**

- Fixing plate ..... 172
- Slot stones ..... 172
- Connecting plates ..... 173
- Wing screw ..... 174
- Fixing element ..... 174

**Drive**

- Handwheel ..... 175
- Motor adaptor/coupling ..... 175

**Position determination**

- Positioning indicator ..... 176
- Limit switch ..... 178 - 179

# PLM – Technical data

## General information/operating conditions

| | |
|---|---|
| Design | Profile linear unit, steel cover strip |
| Guide | Adjustable slide guide |
| Installation position | Any position |
| Lead accuracy | ± 0.1 mm/300 mm travel |
| Self-locking | Yes |
| Ambient temperature | 0°C to + 60°C |

## Screw lead

[mm]

| Type | Screw lead |
|---|---|
| PLM 20 x 20 | 1 |
| PLM 40 x 20 | 1 |

$$\text{Required screw speed n [rpm]} = \frac{\text{speed [m/min] x 1000}}{\text{screw lead [mm]}}$$

## Critical screw speed

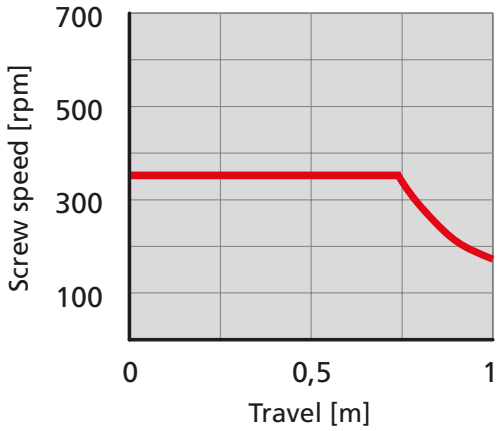


## No-load torque

[Nm]

| Type | No-load torque |
|---|---|
| PLM 20 x 20 | 0.20 |
| PLM 40 x 20 | 0.20 |

## Load data*

F Force [N]

M Moment [Nm]

I Geometric moment of inertia [$cm^4$]

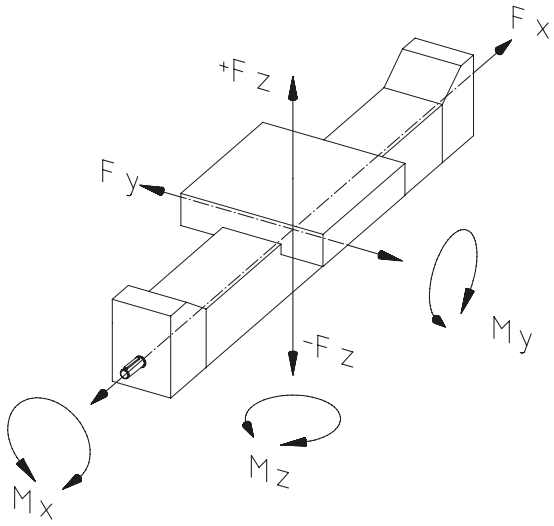


* With reference to carriage (static values, guide element resting on full surface)

| Type | Fx | Fy | +Fz | -Fz | Mx | My | Mz |
|---|---|---|---|---|---|---|---|
| PLM 20 x 20 | 125 | 160 | 90 | 180 | 3 | 10 | 10 |
| PLM 40 x 20 | 125 | 200 | 110 | 220 | 4 | 14 | 14 |

## Geometric moment of inertia

[$cm^4$]

| Type | Iy | Iz |
|---|---|---|
| PLM 20 x 20 | 0.64 | 0.74 |
| PLM 40 x 20 | 1.32 | 5.01 |

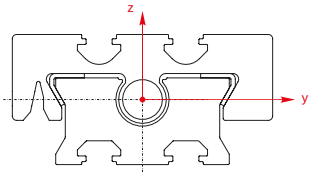

**Order information:**

- Longer travel lengths on request
- Second carriage available on request

**Version ■ Guide**



| Code No. | Type | Basic length | B | H | J | K | L | M | N |
|---|---|---|---|---|---|---|---|---|---|
| MKA2020AA | 20 | 77 | 40 | 7.5 | 61 | 20 | 0 | 10 | 0 |
| MKA4020AA | 40 x 20 | 97 | 60 | 7.5 | 81 | 40 | 20 | 30 | 20 |

_ _ _ _ Total length = basic length + travel [mm]

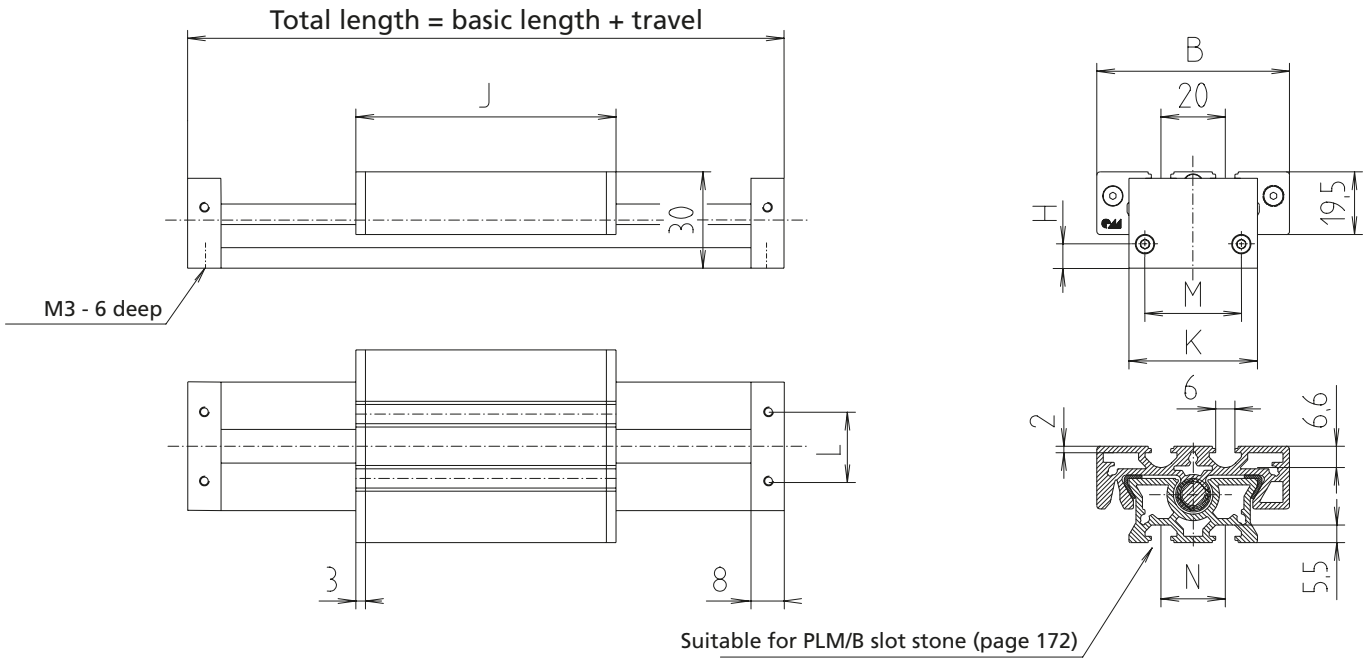


[mm]

| Max. travel | Mass [kg] | |
|---|---|---|
| | Basic length | per 100 mm travel |
| 2935 | 0.09 | 0.03 |
| 2915 | 0.19 | 0.07 |

**Order information:**

- Longer travel lengths on request

**Version** ■ **Right *or* lefthand thread actuator**



| Code No. | Type | Screw | Basic length | B | D1 | D2 | J | K | L1 | L2 | N |
|---|---|---|---|---|---|---|---|---|---|---|---|
| FP_2020TA | 20x20 | M 8x1 | 121 | 40 | 5 | – | 61 | 20 | 21 | – | 0 |
| FP_2020UA | 20x20 | M 8x1 | 121 | 40 | 5 | 5 | 61 | 20 | 21 | 21 | 0 |
| FP_4020TA | 40x20 | M 8x1 | 141 | 60 | 5 | – | 81 | 40 | 21 | – | 20 |
| FP_4020UA | 40x20 | M 8x1 | 141 | 60 | 5 | 5 | 81 | 40 | 21 | 21 | 20 |

_ _ _ _ Total length = basic length + travel [mm]

**Version:**
A = righthand thread
H = lefthand thread

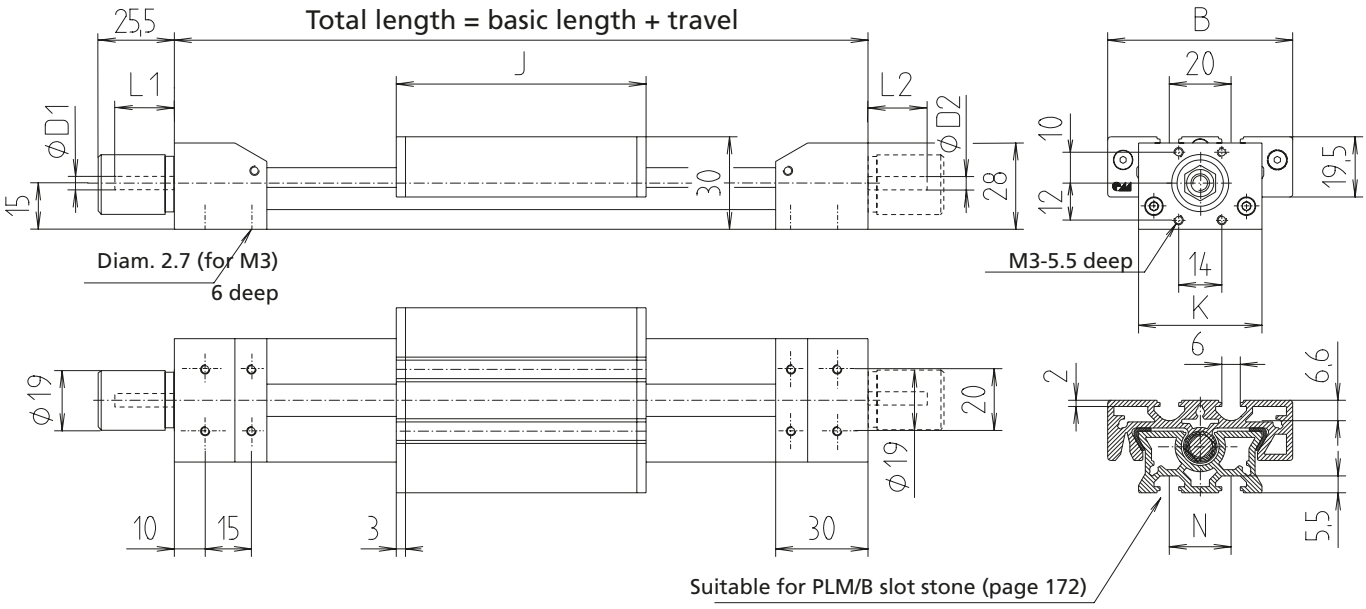


[mm]

| Max. travel | Mass [kg] | |
|---|---|---|
| | Basic length | per 100 mm travel |
| 870 | 0,15 | 0,06 |
| 835 | 0,15 | 0,06 |
| 850 | 0,27 | 0,10 |
| 815 | 0,27 | 0,10 |

# PLM – Versions

**Order information:**

- Please specify total travel when placing an order
- Longer travel lengths on request

**Version** ■ **Right *and* lefthand thread actuator**




| Code No. | Type | Screw | Basic length | B | D1 | D2 | J | K | L1 | L2 | N |
|---|---|---|---|---|---|---|---|---|---|---|---|
| FPC2020SA | 20x20 | M 8x1 | 182 | 40 | 5 | – | 61 | 20 | 21 | – | 0 |
| FPC2020TA | 20x20 | M 8x1 | 182 | 40 | – | 5 | 61 | 20 | – | 21 | 0 |
| FPC2020UA | 20x20 | M 8x1 | 182 | 40 | 5 | 5 | 61 | 20 | 21 | 21 | 0 |
| FPC4020SA | 40x20 | M 8x1 | 222 | 60 | 5 | – | 81 | 40 | 21 | – | 20 |
| FPC4020TA | 40x20 | M 8x1 | 222 | 60 | – | 5 | 81 | 40 | – | 21 | 20 |
| FPC4020UA | 40x20 | M 8x1 | 222 | 60 | 5 | 5 | 81 | 40 | 21 | 21 | 20 |

_ _ _ _ Total length = basic length + travel [mm]

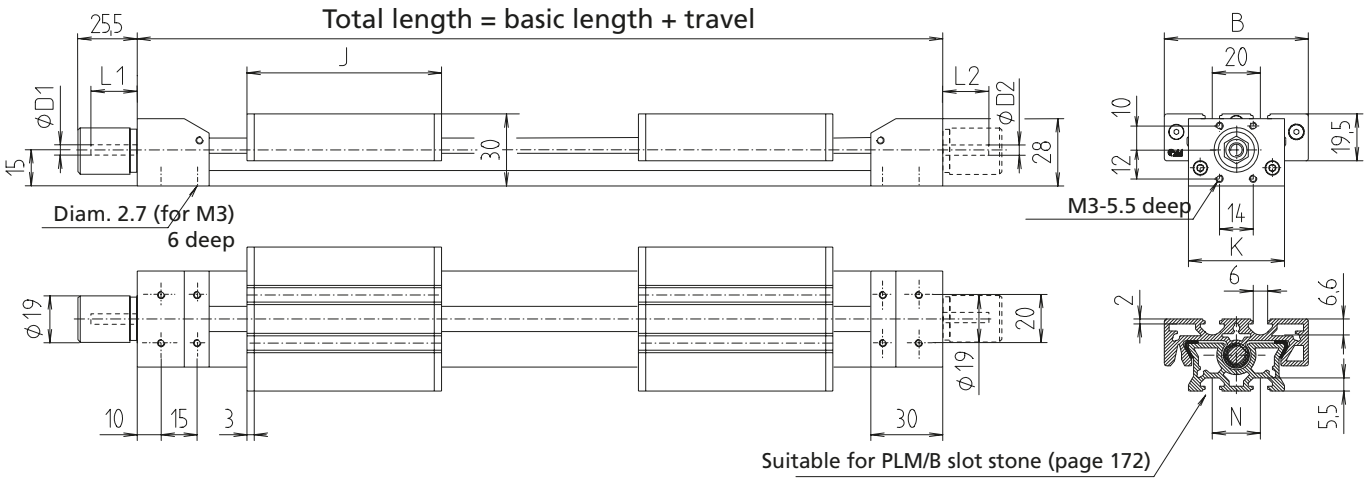


[mm]

| Max. travel | Mass [kg] | |
|---|---|---|
| | Basic length | per 100 mm travel |
| 780 | 0,32 | 0,05 |
| 780 | 0,32 | 0,05 |
| 745 | 0,32 | 0,05 |
| 740 | 0,41 | 0,09 |
| 740 | 0,41 | 0,09 |
| 705 | 0,41 | 0,09 |

# PLM – Versions

**Order information:**

- Please specify total travel when placing an order
- Longer travel lengths on request

**Version** ■ *Split screw actuator*




| Code No. | Type | Screw | Basic length | B | D1 | D2 | J | K | L1 | L2 | N |
|---|---|---|---|---|---|---|---|---|---|---|---|
| FPD2020UA | 20 x 20 | M8 x 1 | 182 | 40 | 5 | 5 | 61 | 20 | 21 | 21 | 0 |
| FPD4020UA | 40 x 20 | M8 x 1 | 222 | 60 | 5 | 5 | 81 | 40 | 21 | 21 | 20 |

_ _ _ _ Total length = basic length + travel [mm]

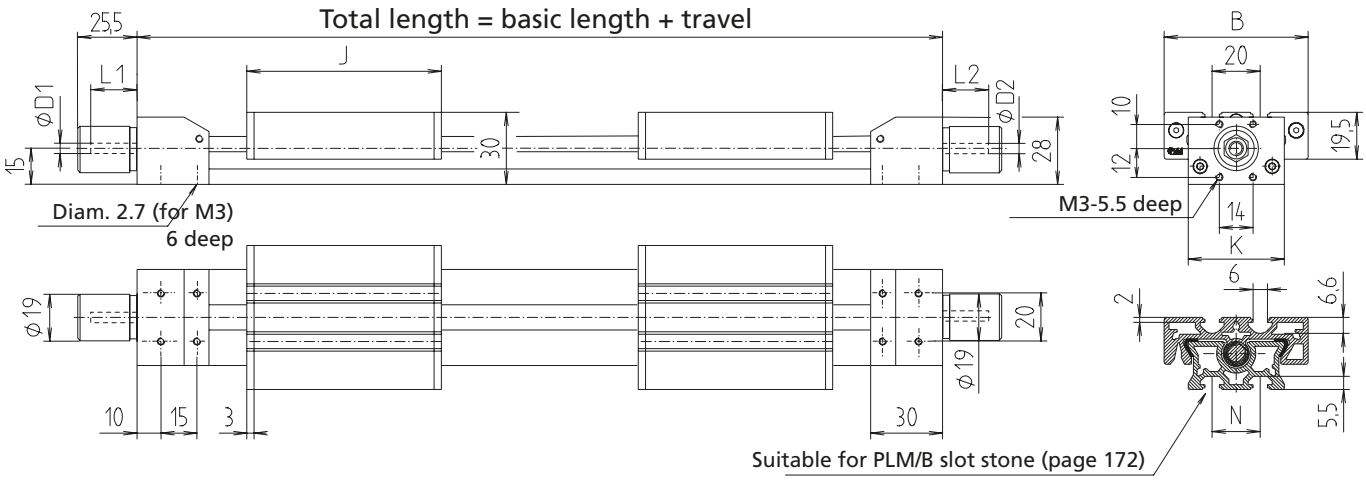


[mm]

| Max. travel | Mass [kg] | |
|---|---|---|
| | Basic length | per 100 mm travel |
| 770 | 0.32 | 0.05 |
| 730 | 0.41 | 0.09 |

## Fixing plate



- Incl. fastenings
- Freewheel for limit switch holder

**Material:** AlMgSi, black anodised

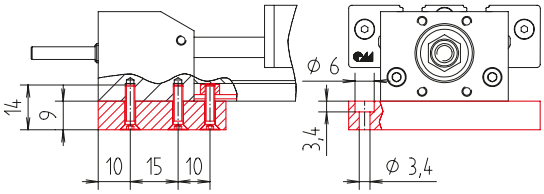


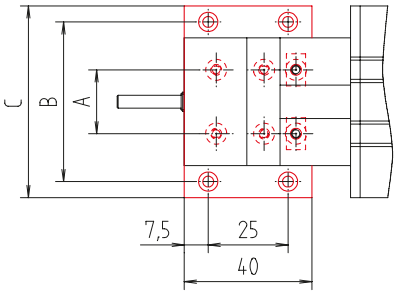


[mm]

| Code No. | Type | A | B | C |
|---|---|---|---|---|
| 94320 | PLM 20 x 20 | – | 30 | 40 |
| 94321 | PLM 40 x 20 | 20 | 50 | 60 |

**Order instruction square nut:**

- **Purchase only in lot sizes and a multiple of that, see product table below**

- Slot stones can be inserted and positioned on the guide profile and carriage

**Material:**
Galvanised steel

## Slot stones

**Slot stone -PLM-**
can be slid into the slot



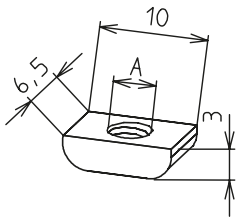


**Slot stone -B-**
can be swivelled into the slot



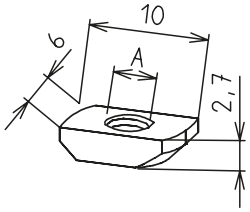


[mm]

| Code No. | Type | lot sizes | A |
|---|---|---|---|
| E00037CEE | -PLM- | 10, 20, 30... pcs | M 3 |
| E00038CEE | -PLM- | 10, 20, 30... pcs | M 4 |
| E00039CEE | -PLM- | 10, 20, 30... pcs | M 5 |
| E00017CEE | -B- | 10, 20, 30... pcs | M 3 |
| E00058CEE | -B- | 10, 20, 30... pcs | M 4 |

## Connecting plate



- Simple connection of 2-axis systems
- Incl. fastenings
- Thickness of connecting plates: 4 mm

**Material:** AlMgSi, black anodised
Steel parts galvanised

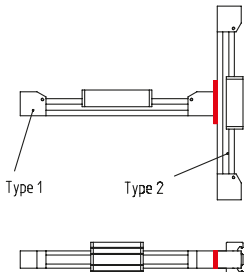


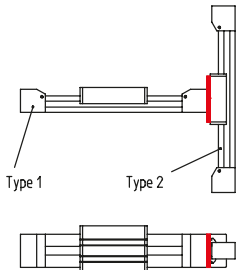


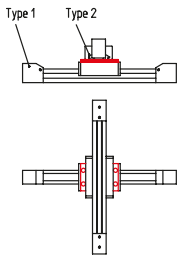


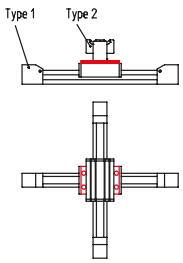


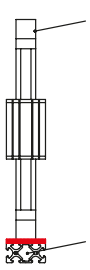


| Code No. | Version | Type 1 | Type 2 |
|---|---|---|---|
| 94331 | Bearing element on guide profile | PLM 20 x 20 | PLM 20 x 20 |
| 94330 | | PLM 40 x 20 | PLM 20 x 20 |
| 94334 | | PLM 40 x 20 | PLM 40 x 20 |
| 94333 | Bearing element on carriage | PLM 20 x 20 | PLM 20 x 20 |
| 94332 | | PLM 40 x 20 | PLM 20 x 20 |
| 94335 | | PLM 40 x 20 | PLM 40 x 20 |
| 94340 | Carriage on carriage | PLM 20 x 20 | PLM 20 x 20<br>PLM-G 20 x 20 |
| 94344 | | PLM 40 x 20 | PLM 20 x 20<br>PLM-G 20 x 20 |
| 94342 | | PLM 40 x 20 | PLM 40 x 20<br>PLM-G 40 x 20 |
| 94341 | Carriage on guide profile | PLM 20 x 20 | PLM 20 x 20<br>PLM-G 20 x 20 |
| 94345 | | PLM 40 x 20 | PLM 20 x 20<br>PLM-G 20 x 20 |
| 94343 | | PLM 40 x 20 | PLM 40 x 20<br>PLM-G 40 x 20 |
| 94350 | Bearing element on guide profile | PLM 20 x 20 | F-20 x 20 |
| 94351 | | PLM 20 x 20 | F-40 x 20 |
| 94352 | | PLM 40 x 20 | F-40 x 20 |

# PLM – Fixing/Drive

## Wing screw

- Slide clamp for PLM 20 x 20 and 40 x 20

**Material:** Polyamide
Galvanised thread



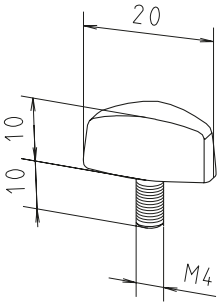


[mm]

| Code No. | Type |
|---|---|
| 90291 | PLM 20 x 20/40 x 20 |

## Fixing element

- Element for vertical installation of PLM
- Fastenings for mounting on carriage is included in delivery

**Material:** Gk-AlSi 12 (Cu)
black powder-coating





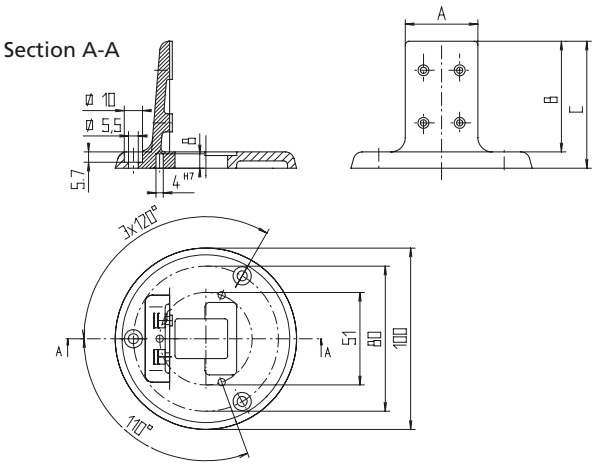


[mm]

| Code No. | Type | A | B | C |
|---|---|---|---|---|
| 95520 | PLM 20 x 20 | 40 | 61 | 70 |
| 95542 | PLM 40 x 20 | 60 | 81 | 90 |

## Handwheel

**Material:** Aluminium die casting
Wheel body, plastic-coated



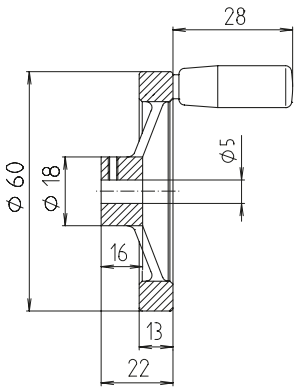


[mm]

| Code No. | Type |
|---|---|
| 909200 | PLM 20/40 x 20 |

## Motor adaptor/coupling

**Material:** Aluminium,
black anodised
Galvanised screws

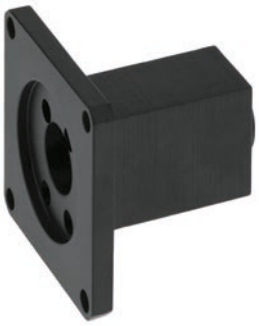

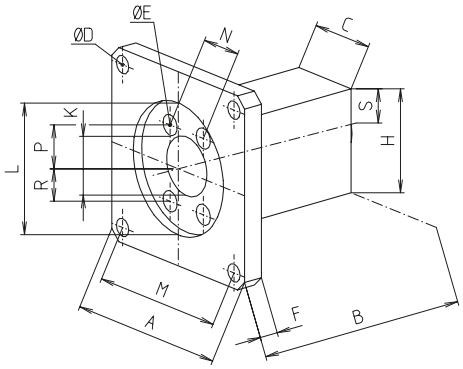


[mm]

| Code No. | Type/motor | □A | B | C | D | E | F | H | K | L | □M | N | P | R | S |
|---|---|---|---|---|---|---|---|---|---|---|---|---|---|---|---|
| **Motor adaptor** | | | | | | | | | | | | | | | |
| 91462 | PLM/ NEMA 17 | 41 | 55,5 | 22 | 3,5 | 3,5 / 6 | 6 | 30 | 17 | $22^{H7}$/3 deep | 31 | 14 | 10 | 12 | 14 |
| 91472 | PLM/ NEMA 23 | 56 | 52 | 22 | 5,2 | 3,5 / 6 | 6 | 30 | 17 | 38,1/3 deep | 47 | 14 | 10 | 12 | 14 |
| **Coupling** | | | | | | | | | | | | | | | |
| 9107140505 | For motor acc. to NEMA 17, diam. 5/diam. 5 | | | | | | | | | | | | | | |
| 9107140506 | For motor acc. to NEMA 23, diam. 5/diam. 6.3 | | | | | | | | | | | | | | |

# PLM – Position determination

## Positioning indicator

- Max ambient temperature +80°C
- Figure height 6 mm
- Reading accuracy ± 0.1 mm

**Material:** Housing made of polyamide 6
Orange RAL 2004
Steel parts galvanised

**Scope of delivery:** Positioning indicator, clamping ring, shaft extension and fastenings

**Note:** “rising” and “falling” versions refer to the clockwise rotation of the drive shaft.



Installation position: horizontal

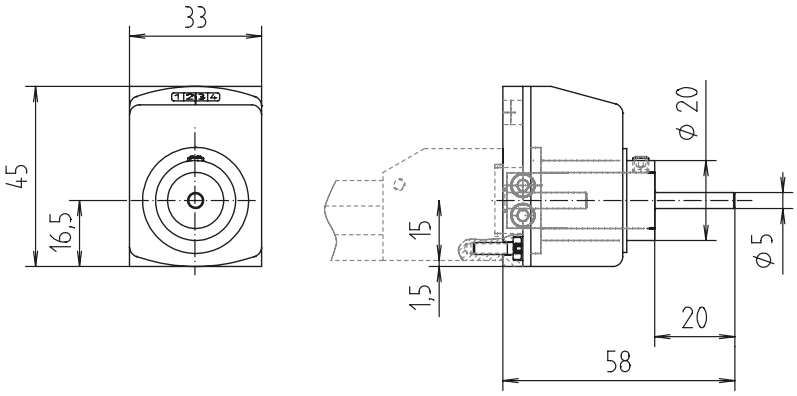




Installation position: vertical

| Code No. | Type | Version | Installation position |
|---|---|---|---|
| 9101000 | PLM 20 x 20/40 x 20 | 1 mm rising | Horizontal |
| 9101010 | | 1 mm falling | Horizontal |
| 9101020 | | 1 mm rising | Vertical |
| 9101030 | | 1 mm falling | Vertical |



## Mechanical limit switch

- Single-pole changeover contact
- Compact design

**Material:** Housing, thermoplastic



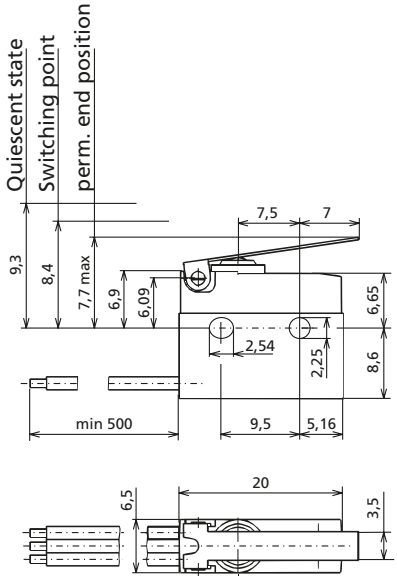


| | |
|---|---|
| Max. voltage | 24 V (12 V) |
| Max. switching current | 3 A (6 A) |
| Mechanical lifetime | 1 x $10^6$ switching cycles |
| Protection class | IP 67 |
| Ambient temperature | -40°C to +85°C |
| Connecting leads | 0.75 $mm^2$, encapsulated in the switch |

| Code No. | Version |
|---|---|
| 91923 | PLM |

## Limit switch holder

- Holder for guide profile
- Can be moved and fixed axially

**Material:** AlMgSi, black anodised
Steel parts galvanised

**Note:** The Order No. does not include the limit switch!



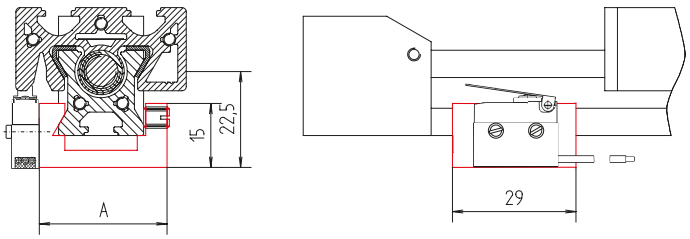


[mm]

| Code No. | Type | A |
|---|---|---|
| 92940 | PLM 20 x 20 | 30 |
| 92941 | PLM 40 x 20 | 50 |

## Inductive limit switch

- The holder can be moved along the guide profile and fixed

**Material:** Holder and contact plate made of black anodised aluminium Galvanised fastenings

**Scope of delivery:** 1 limit switch with complete holder, contact plate and fastenings

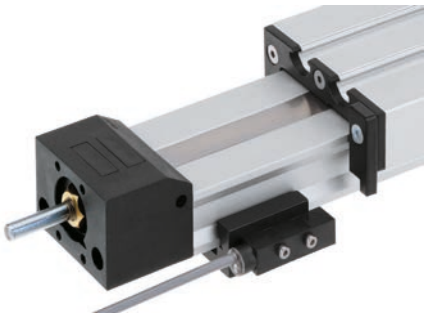

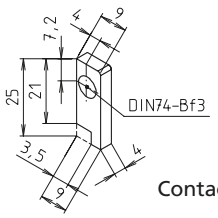


Contact plate

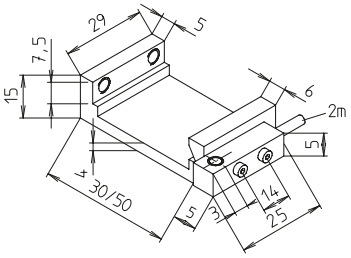


| | |
|---|---|
| Operating distance | 2 mm |
| Voltage range: | 10/-30 V DC |
| Current consumption: | < 18 mA |
| Max. switching frequency: | 5 khz |
| Output: | PNP NC contact |
| Ambient temperature: | -25°C to +75°C |

| Code No. | Type | Version |
|---|---|---|
| 92812 | PLM 20 x 20 | Right |
| 92822 | PLM 20 x 20 | Left |
| 928142 | PLM 40 x 20 | Right |
| 928242 | PLM 40 x 20 | Left |



# Profile guide/actuator – RK Compact

**Slimline short-stroke linear actuator**
**for hand adjustment – with excellent price-performance ratio**

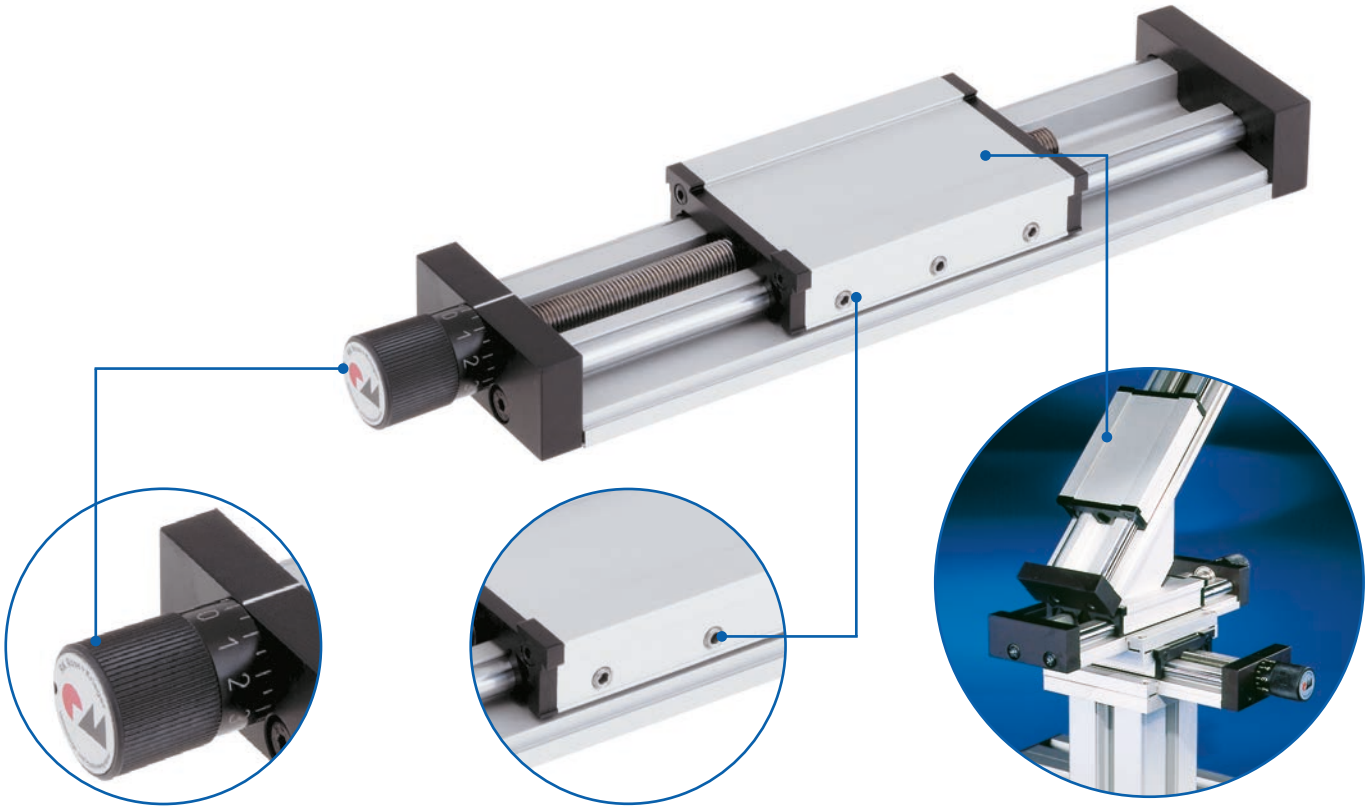

**Control knob with vernier**
✓ Simple adjustment of carriage

✓ Backlash of carriage adjustable

**Multiple axis combinations**
✓ Standard accessories support the simple configuration of multiple axis combinations

**Standard strokes**
**48 h**
**ready for delivery**

## Features:

- Wide range of accessories for combining multiple axes
- Standard version with control knob
- Standard strokes ex warehouse

## Options:

- Longer stroke lengths
- Second free-running carriage

# RK Compact linear unit - Table of contents


## Properties/Technical data

- General information/operating conditions ... 182
- Load data ... 183

## Versions
(Dimensions, order numbers)

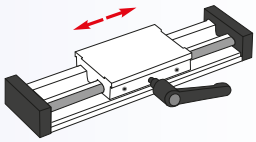

- RK Compact G guide unit ... 184 - 185

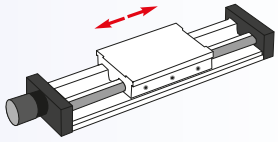

- Right *or* lefthand thread ... 186 - 187

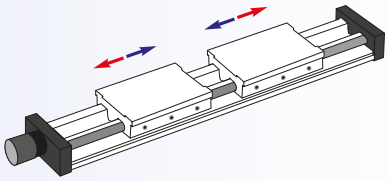

- Right *and* lefthand thread ... 188 - 189

## Accessories

**Fixing**

- Clamping lever ... 190
- Clamping brackets ... 191
- Combination angle ... 192
- Combination plate ... 192
- Fixing plate for BLOCAN® profiles ... 193

**Drive**

- Handwheel ... 194
- Motor adaptor/coupling ... 194

**Position determination**

- Limit switches ... 195
- Positioning indicator ... 195

# RK Compact – Technical data

## General information/operating conditions

| | |
|---|---|
| Design | Profile linear unit with extruded guide profile/carriage |
| Guide | Adjustable slide guide |
| Installation position | Any position |
| Lead accuracy | Threaded screw ± 0.1 mm/300 mm travel, ball screw drive ± 0.05 mm/300 mm travel |
| Self-locking | Yes, for threaded screw. No, for ball screw drive |
| Ambient temperature | 0°C to +60°C |

## Screw lead

[mm]

| Threaded screw | |
|---|---|
| Type | Screw lead |
| RK Compact 30 | 0.5 |
| RK Compact 50-120 | 1 |

[mm]

| Ball screw drive | |
|---|---|
| Type | Screw lead |
| RK Compact 80-120 | 1 |

$$\text{Required screw speed n [rpm]} = \frac{\text{speed [m/min] x 1000}}{\text{screw lead [mm]}}$$

* max. screw speed with threaded screw 500 rpm
with ball screw drive 1000 rpm

## No-load torque

[Nm]

| Type | No-load torque |
|---|---|
| RK Compact | 0.20 |

## Load data*

F Force [N]

M Moment [Nm]

I Geometric moment of inertia [$cm^4$]

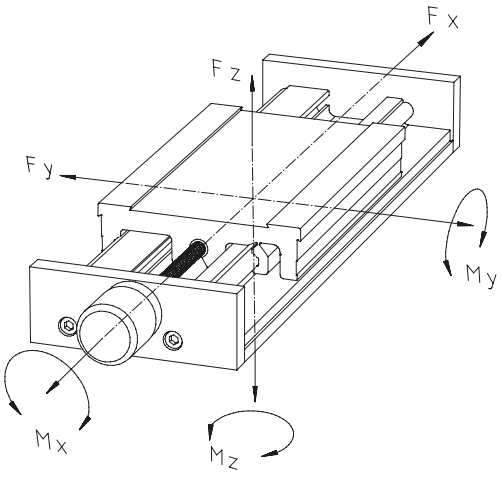


* With reference to carriage (static values, guide element resting on full surface)

| Type | Fx | Fy | Fz | Mx | My | Mz |
|---|---|---|---|---|---|---|
| RK Compact 30 | 50 | 160 | 160 | 3 | 3 | 3 |
| RK Compact 50 | 125 | 350 | 350 | 6 | 7.5 | 7.5 |
| RK Compact 80 | 215 | 600 | 600 | 12 | 18 | 18 |
| RK Compact 120 | 215 | 1150 | 1150 | 32 | 59 | 59 |

## Geometric moment of inertia

[$cm^4$]

| Type | Iy | Iz |
|---|---|---|
| RK Compact 30 | 0.09 | 0.90 |
| RK Compact 50 | 0.46 | 7.44 |
| RK Compact 80 | 3.68 | 47.14 |
| RK Compact 120 | 9.85 | 214.84 |

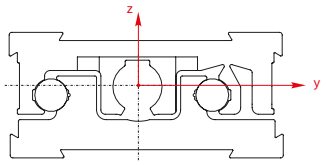

**Order information:**

- Longer travel lengths on request

**Version** ■ **Guide**

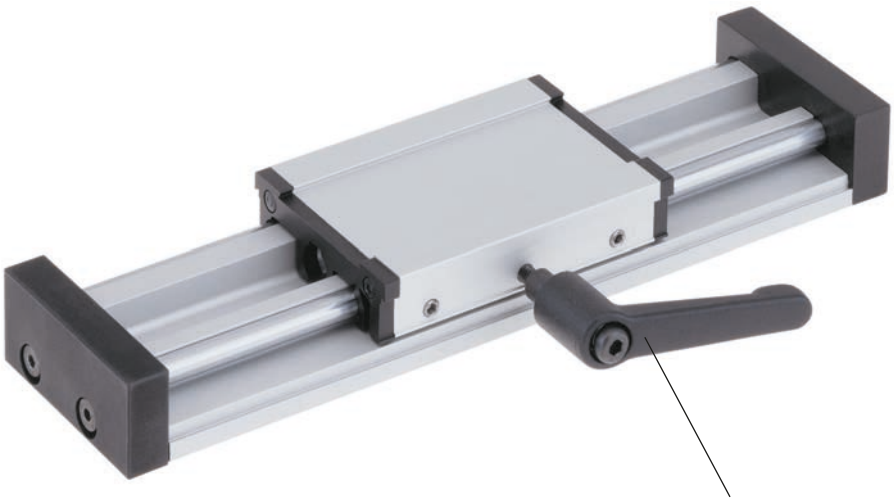

Clamping lever for sizes 50-120 is included with

| Code No. | Type | Basic length | Standard stroke | B | C | J |
|---|---|---|---|---|---|---|
| MLA3017AA | 30 | 59 | 10, 20, 30, 50 | 30 | 17 | 45 |
| MLA5023AA | 50 | 95 | 25, 50, 75, 100 | 50 | 23 | 75 |
| MLA8036AA | 80 | 144 | | 80 | 36 | 120 |
| MLA1246AA | 120 | 204 | | 120 | 46 | 180 |

MLA____ Total length = basic length + travel [mm]

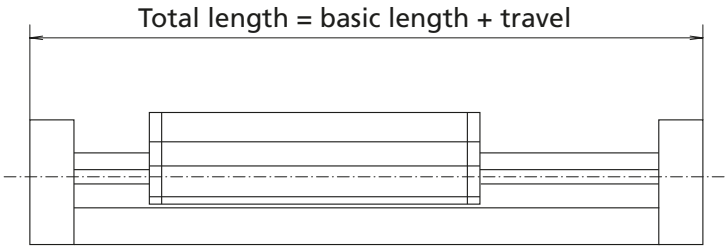


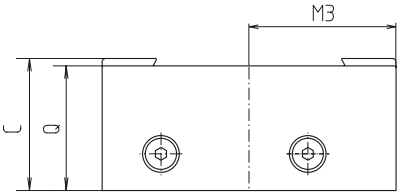


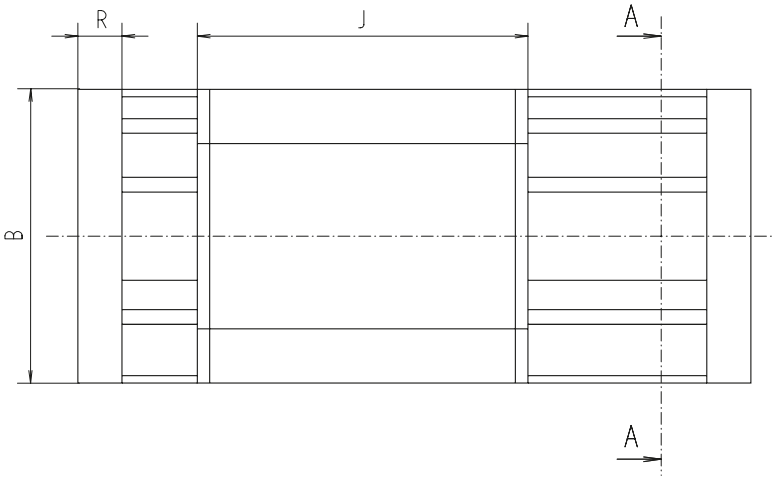


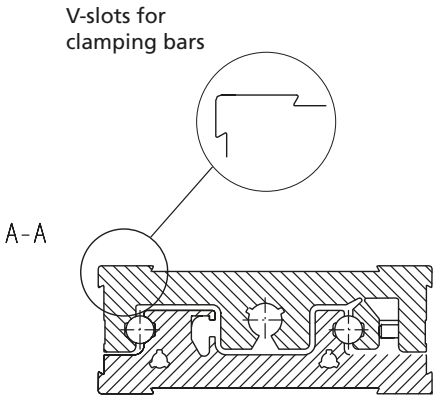


[mm]

| M3 | Q | R | Max. travel | Mass [kg] | |
|---|---|---|---|---|---|
| | | | | Basic length | per 100 mm travel |
| 17.1 | 16 | 7 | 300 | 0.06 | 0.07 |
| 26.5 | 21.5 | 10 | 350 | 0.27 | 0.14 |
| 40 | 34 | 12 | 350 | 0.29 | 0.29 |
| 60 | 44 | 12 | 400 | 2.62 | 0.63 |

# RK Compact – Versions

**Order information:**

- Standard strokes in stock! Take advantage of our fast delivery times and lower prices
- Longer travel lengths on request
- Slide clamp page 190

**Version** ■ **Right *or* lefthand thread**



48 h ready for delivery

**For standard strokes**

- Righthand threaded screw
- Type 30: 10, 20, 30, 50 mm
- Type 50-120: 25, 50, 75, 100 mm

| Code No. | Type | Spindle | Basic length | Standard stroke | B | C | D | H1 |
|---|---|---|---|---|---|---|---|---|
| **Threaded screw** | | | | | | | | |
| FN_ 3017 TA | 30 | M5 x 0.5 | 59 | 10,20,30,50 | 30 | 17 | 13.5 | 8 |
| FN_ 5023 TA | 50 | 8 x 1 | 95 | 25 | 50 | 23 | 19 | 13 |
| FN_ 8036 TA | 80 | 8 x 1 | 144 | 50<br>75 | 80 | 36 | 27 | 20.5 |
| FN_ 1246 TA | 120 | 8 x 1 | 204 | 100 | 120 | 46 | 35 | 26.5 |
| **Ball screw drive** | | | | | | | | |
| FO_ 8036 TA | 80 | 8 x 1 | 144 | – | 80 | 36 | 27 | 20.5 |
| FO_ 1246 TA | 120 | 8 x 1 | 204 | – | 120 | 46 | 35 | 26.5 |

_ _ _ _ Total length = basic length + travel [mm]

**Version:**
A = righthand thread
H = lefthand thread

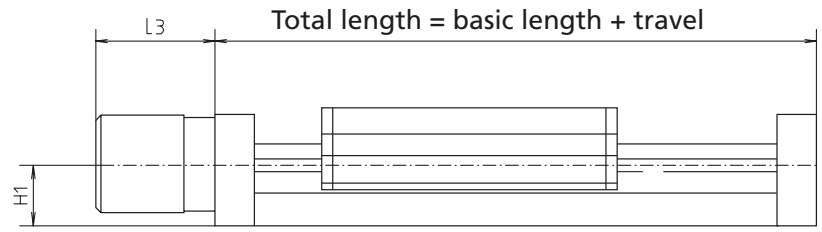


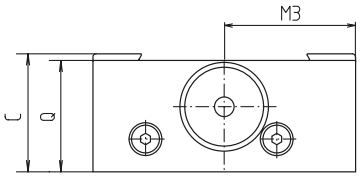


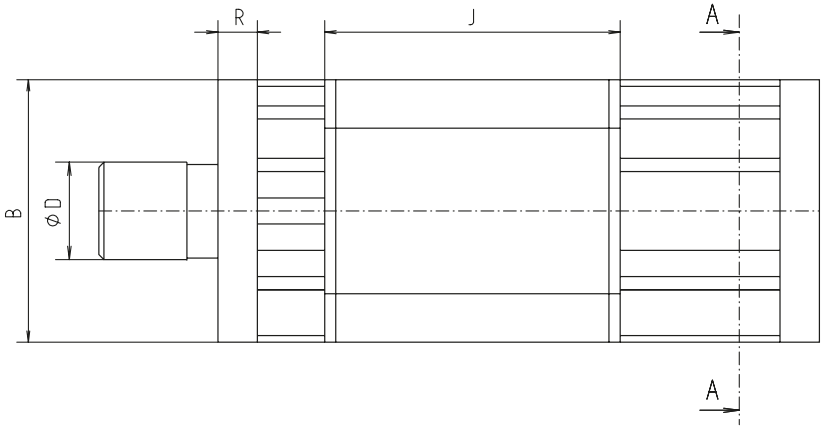


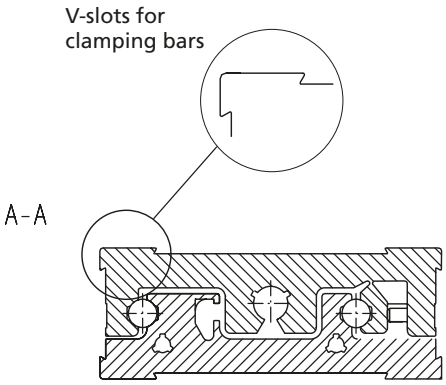


[mm]

| J | C | M3 | Q | R | Max. travel | Mass [kg] | |
|---|---|---|---|---|---|---|---|
| | | | | | | Basic length | per 100 mm travel |
| 45 | 21 | 17.1 | 16 | 7 | 130 | 0.08 | 0.07 |
| 75 | 22.5 | 26.5 | 21.5 | 10 | 350 | 0.29 | 0.18 |
| 120 | 30.5 | 40 | 34 | 12 | 350 | 0.99 | 0.33 |
| 180 | 35.5 | 60 | 44 | 12 | 400 | 2.76 | 0.67 |
| | | | | | | | |
| 120 | 30.5 | 40 | 34 | 12 | 199 | 0.99 | 0.33 |
| 180 | 35.5 | 60 | 44 | 12 | 199 | 2.76 | 0.67 |

**Order information:**

- Longer travel lengths on request
- Slide clamp page 190

**Version** ■ **Right *and* lefthand thread**

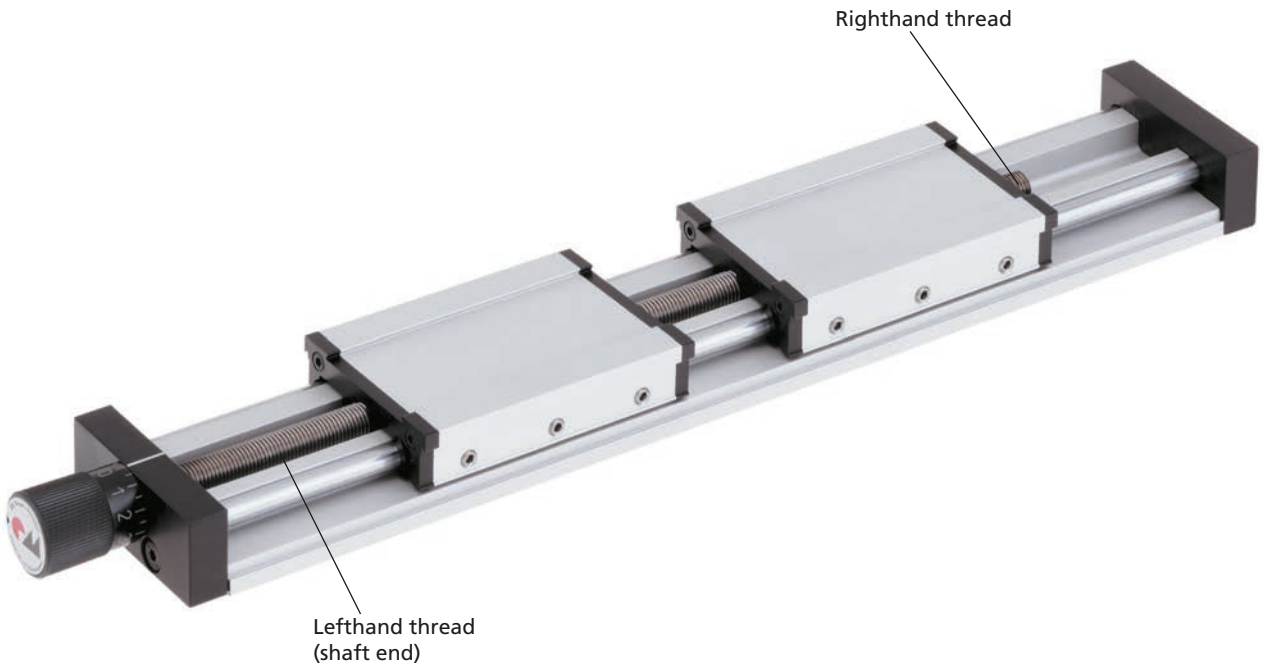


| Code No. | Type | Spindle | Basic length | B | C | D | H1 |
|---|---|---|---|---|---|---|---|
| Threaded screw | | | | | | | |
| FNC 3017 TA | 30 | M5 x 0.5 | 104 | 30 | 17 | 13.5 | 8 |
| FNC 5023 TA | 50 | 8 x 1 | 170 | 50 | 23 | 19 | 13 |
| FNC 8036 TA | 80 | 8 x 1 | 264 | 80 | 36 | 27 | 20.5 |
| FNC 1246 TA | 120 | 8 x 1 | 384 | 120 | 46 | 35 | 26.5 |

_ _ _ _ Total length = basic length + total travel [mm]

RK ROSE+KRIEGER



Total length = basic length + travel

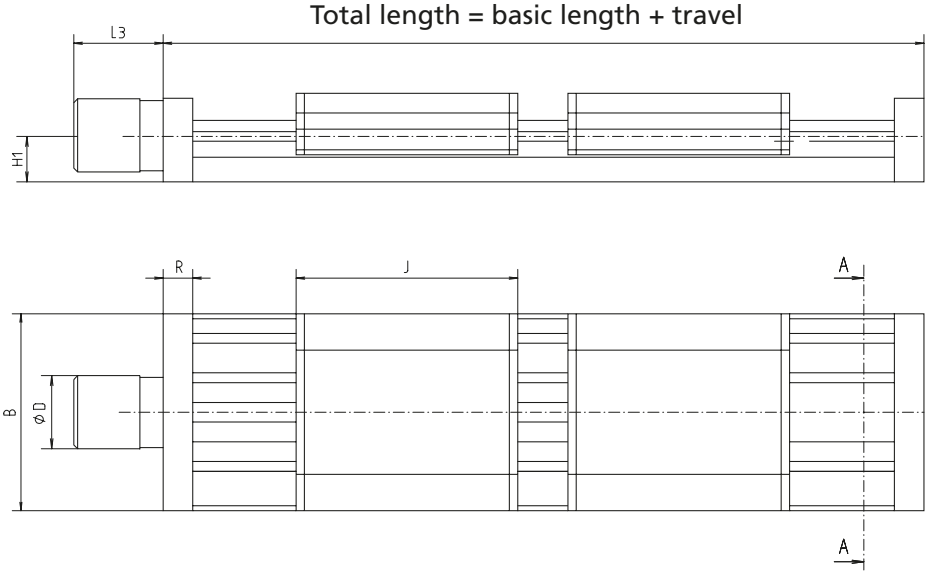


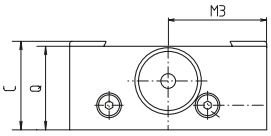


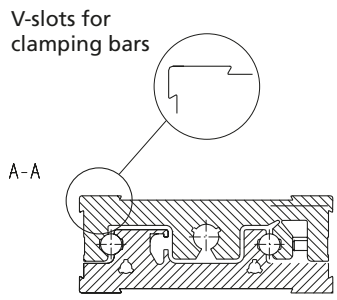


[mm]

| J | C | M3 | Q | R | Max. travel | Mass [kg] | |
|---|---|---|---|---|---|---|---|
| | | | | | | Basic length | per 100 mm travel |
| 45 | 21 | 17.1 | 16 | 7 | 85 | 0.13 | 0.08 |
| 75 | 25.5 | 26.5 | 21.5 | 10 | 275 | 0.29 | 0.18 |
| 120 | 30.5 | 40 | 34 | 12 | 230 | 0.99 | 0.33 |
| 180 | 35.5 | 60 | 44 | 12 | 220 | 2.76 | 0.67 |

## Clamping lever

- For the equipping of fixing elements and carriages

**Material:** Handle made of die cast zinc, plastic-coated



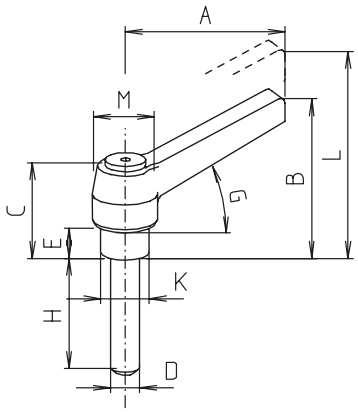


[mm]

| Code No. | Type | A | B | C | D | E | G | H | K | L | M |
|---|---|---|---|---|---|---|---|---|---|---|---|
| 90292 | 50 | 45 | 40 | 25 | M4 | 7.5 | 25° | 10 | 7 | 43 | 13 |
| 90293 | 80 | 45 | 35 | 22 | M5 | 4 | 25° | 15 | 10 | 38 | 13 |
| 90294 | 120 | 45 | 35 | 22 | M6 | 4 | 25° | 20 | 10 | 38 | 13 |

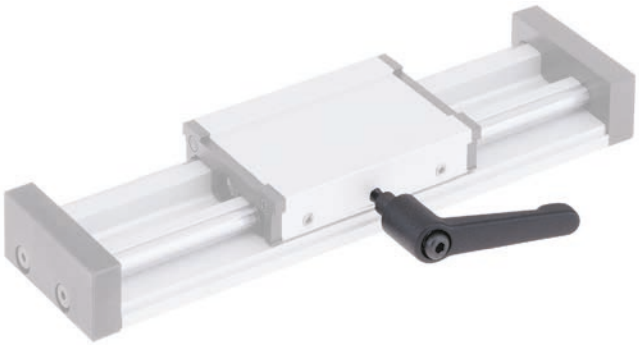





## Clamping brackets

- Complete set for mounting on cross table
- Fixing of linear unit on an existing design
- Fixing of auxiliary devices and tools to the carriage

**Material:** Aluminium clear anodised
Galvanised fastenings

**Scope of delivery:** 1 set contains 2 clamping bars. Version with counterbore includes fixing screws

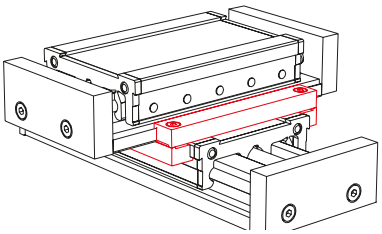

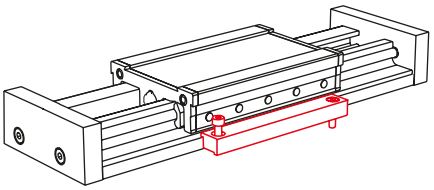



Version: crossing, complete

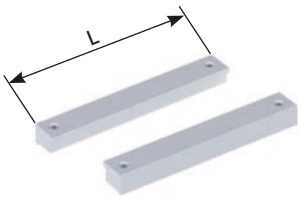


Version: with thread

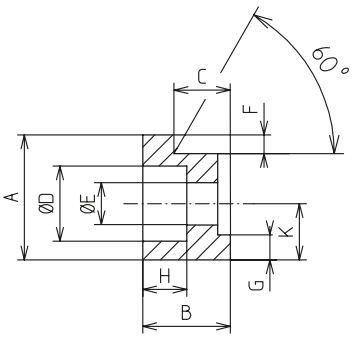


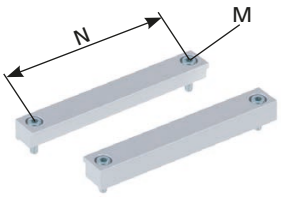


Version: with counterbore

[mm]

| Code No. | Type | Version | A | B | C | D | E | F | G | H | K | L | M | N |
|---|---|---|---|---|---|---|---|---|---|---|---|---|---|---|
| 91879 | 30 | with counterbore | 6.6 | 4.2 | 3 | 5 | 2.9 | 1 | 0.9 | 2.9 | 2.9 | 41.2 | M2,5 x 6 | 35.4 |
| 91880 | 30 | with thread | 6.6 | 4.2 | 3 | – | M2.5 | 1 | 0.9 | – | 2.9 | 41.2 | M2,5 x 6 | 35.4 |
| 91881 | 30 | crossing, complete | | | | | | | | | | | | |
| 91882 | 30/50 | crossing, complete | | | | | | | | | | | | |
| 91845 | 50 | with counterbore | 10 | 7 | 4.5 | 6 | 3.4 | 1.5 | 2 | 4 | 4.5 | 67 | M3 x 10 | 58 |
| 91846 | 50 | with thread | 10 | 7 | 4.5 | – | M3 | 1.5 | 2 | – | 4.5 | 67 | – | 58 |
| 91847 | 50 | crossing, complete | | | | | | | | | | | | |
| 91857 | 50/80 | crossing, complete | | | | | | | | | | | | |
| 91848 | 80 | with counterbore | 14.5 | 10 | 8 | 8 | 4.5 | 2 | 2.5 | 5 | 6.5 | 105 | M4 x 14 | 92 |
| 91849 | 80 | with thread | 14.5 | 10 | 8 | – | M4 | 2 | 2.5 | – | 6.5 | 105 | – | 92 |
| 91850 | 80 | crossing, complete | | | | | | | | | | | | |
| 91858 | 80/120 | crossing, complete | | | | | | | | | | | | |
| 91851 | 120 | with recess | 14.5 | 10 | 8 | 10 | 5.5 | 2 | 2.5 | 5.7 | 6.5 | 145 | M5 x 14 | 132 |
| 91852 | 120 | with thread | 14.5 | 10 | 8 | – | M5 | 2 | 2.5 | – | 6.5 | 145 | – | 132 |
| 91853 | 120 | crossing, complete | | | | | | | | | | | | |

## Combination angle

- Combination angle for the creation of 2-axis combinations below 45° and 90°
- Simple assembly and centring due to prism geometry

**Material:** Aluminium, clear anodised
Stainless-steel set screws

**Scope of delivery:**
2 angled halves (1 x with thread, 1 x without thread)
3 set screws

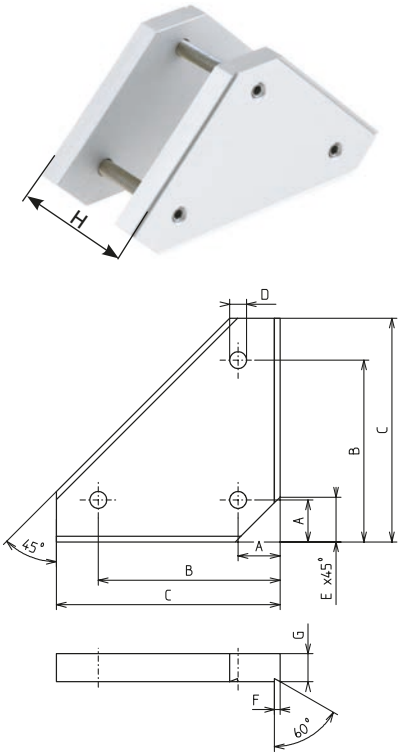


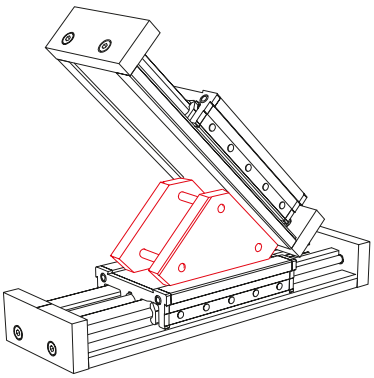

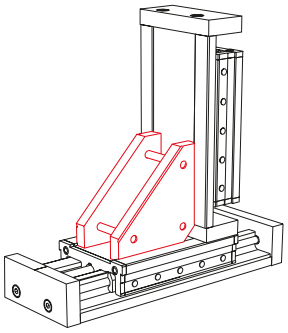

[mm]

| Code No. | Type | A | B | C | D | E | F | G | H |
|---|---|---|---|---|---|---|---|---|---|
| 91883 | 30 | 7 | 21 | 25 | M4 | 9.3 | 1 | 4 | 17.2 |
| 91854 | 50 | 11 | 40 | 50 | M5 | 13 | 1.5 | 8 | 31.7 |
| 91855 | 80 | 15 | 65 | 80 | M6 | 16 | 2 | 10 | 52.3 |
| 91856 | 120 | 18 | 100 | 120 | M8 | 16 | 2 | 12 | 82.3 |

## Combination plate

- The combination plate enables the drilling of holes for the fixing of a superstructure
- Used together with the combination angle, it allows the combination of different sizes and movement of the axes by 90°

**Material:** Aluminium, clear anodised
Galvanised fastenings

**Scope of delivery:**
1 combination plate
1 set of clamping bars (thread)
Fastenings

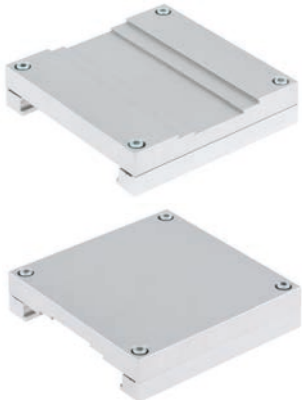

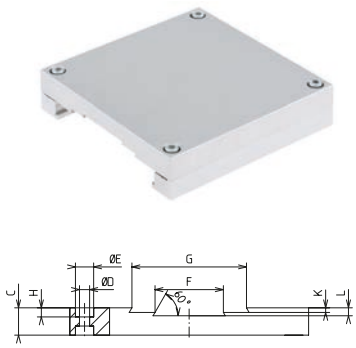


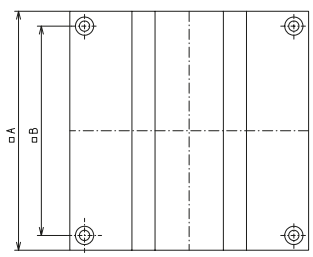


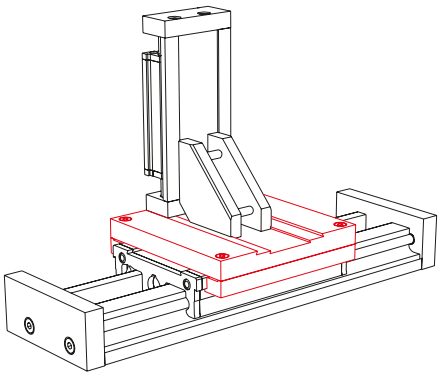

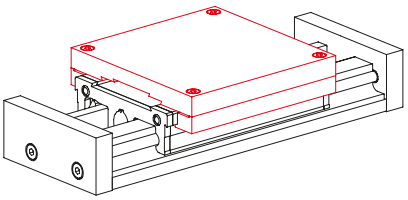

[mm]

| Code No. | Type | A | B | C | D | E | F | G | H | K | L |
|---|---|---|---|---|---|---|---|---|---|---|---|
| 94365 | 30 | 41.2 | 35.4 | 5 | 2.9 | 5 (90°) | 16 | – | – | 1 | – |
| 94362 | 50 | 67 | 58 | 8 | 3.4 | 6 | 30 | – | 2.5 | 1.5 | – |
| 94363 | 80 | 105 | 92 | 12 | 4.5 | 8 | 30 | 50 | 4 | 2 | 3.5 |
| 94364 | 120 | 145 | 132 | 15 | 5.5 | 10 | 50 | 80 | 4.5 | 2 | 4 |

## Fixing plate for BLOCAN® profiles

- For connecting a linear unit to a design made of BLOCAN® profiles
- Centring pins facilitate the assembly and alignment of the profiles

**Material:** Aluminium, clear anodised,
Centring pins, polyamide
Galvanised fastenings

**Scope of delivery:**
1 fixing plate
2 centring pins
1 set of clamping bars with clamping
2 or 3 slot stones -F- Fastenings



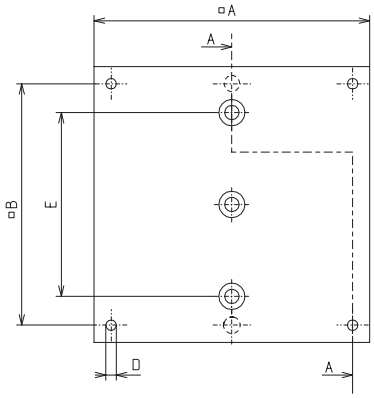


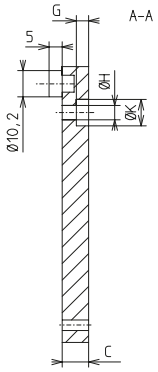


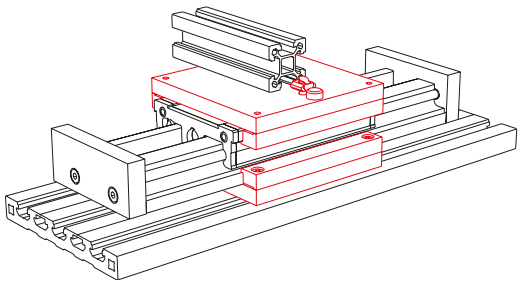

[mm]

| Code No. | Type | Version | A | B | C | D | E | G | H | K |
|---|---|---|---|---|---|---|---|---|---|---|
| 94356 | 50 | up to S/F-30 | 67 | 58 | 8 | M3 | 34 | 3.9 | 4.5 | 8 |
| 94357 | 50 | from S/F-40 | 67 | 58 | 8 | M3 | 34 | 3.9 | 4.5 | 8 |
| 94358 | 80 | up to S/F-30 | 105 | 92 | 10 | M4 | 70 | 4.7 | 5.5 | 10 |
| 94359 | 80 | from S/F-40 | 105 | 92 | 10 | M4 | 70 | 4.7 | 5.5 | 10 |
| 94360 | 120 | up to S/F-30 | 145 | 132 | 12 | M5 | 110 | 4.9 | 6.6 | 11 |
| 94361 | 120 | from S/F-40 | 145 | 132 | 12 | M5 | 110 | 4.9 | 6.6 | 11 |

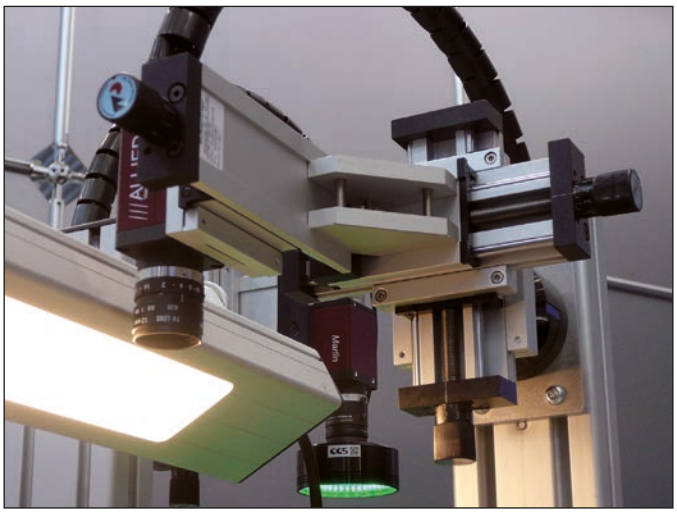

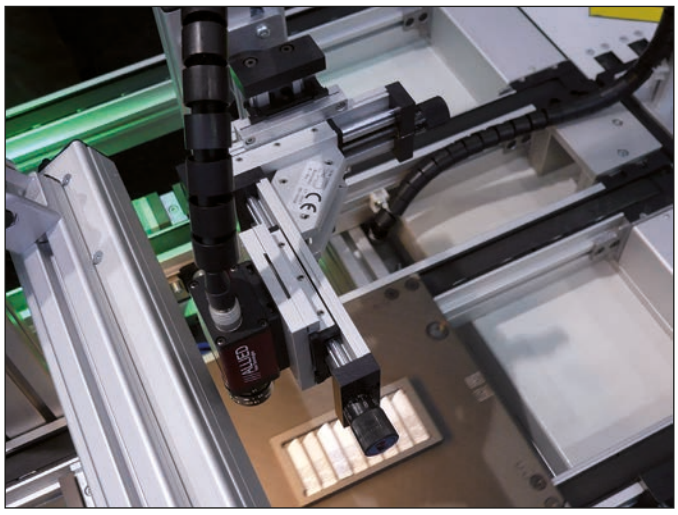

Camera adjustment via RK Compact 3-axis system, fixing via standard accessories

## Handwheel

- Rotating cylindrical grip
- Fully turned wheel rim
- Machined hub

**Material:** Aluminium die casting. Wheel body, completely plastic-coated



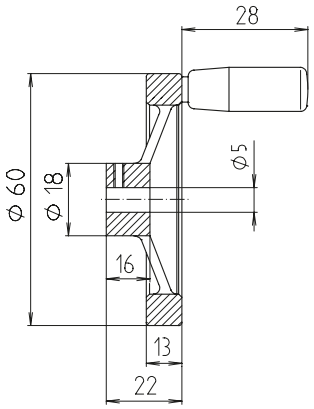


| Code No. | Type |
|---|---|
| 909200 | 50/80/120 |

## Motor adaptor

**Material:** Aluminium, black anodised, Galvanised fastenings



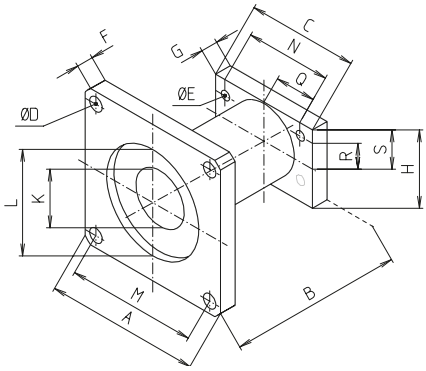


[mm]

| Code No. | Type | □ A | B | C | D | E | F | G | H | K | L | □ M | N | Q | R | S |
|---|---|---|---|---|---|---|---|---|---|---|---|---|---|---|---|---|
| 91301 | RK Compact 80/ NEMA 17 | 41 | 55,5 | 70 | 3,5 | 5,5 | 6 | 6 | 34 | 20 | $22^{H7}$/3deep | 31 | 40 | 16 | 10 | 20,5 |
| 91302 | RK Compact 80/ NEMA 23 | 56 | 52 | 70 | 5,2 | 5,5 | 6 | 6 | 34 | 20 | 38,1/3deep | 47 | 40 | 16 | 10 | 20,5 |
| 91303 | RK Compact 120/ NEMA 17 | 41 | 55,5 | 90 | 3,5 | 6,6 | 6 | 6 | 34 | 20 | $22^{H7}$/3deep | 31 | 61 | – | 12 | 26,5 |
| 91309 | RK Compact 120/ NEMA 23 | 56 | 52 | 90 | 5,2 | 6,6 | 6 | 6 | 34 | 20 | 38,1/3deep | 47 | 61 | 23 | 12 | 26,5 |

## Coupling



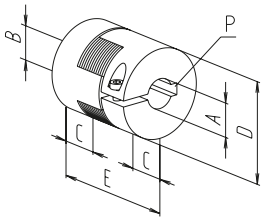


| Code No. | Type |
|---|---|
| 9107140505 | Coupling for motor acc. to NEMA 17, Ø5 / Ø5 |
| 9107140506 | Coupling for motor acc. to NEMA 23, Ø5 / Ø6,3 |

## Positioning indicator

- Permitted ambient temperature +80°C
- Figure height 6 mm
- Reading accuracy ± 0.1 mm

**Material:** Housing made of polyamide 6
Orange RAL 2004
Steel parts galvanised

**Scope of delivery:** Positioning indicator, clamping ring, shaft extension and fastenings

**Note:** If using a positioning indicator, the rotary knob delivered with the RK Compact must be replaced with the handwheel shown on the left.

"Rising" and "falling" versions refer to the clockwise rotation of the drive shaft.



Installation position: horizontal

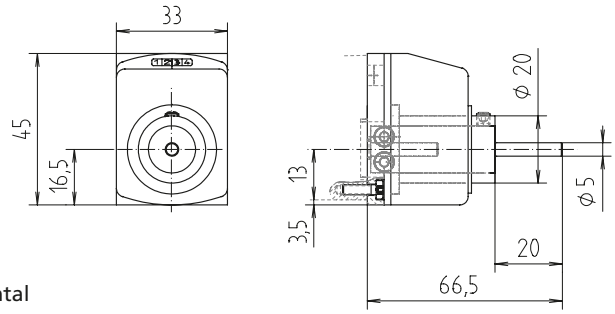




Installation position: vertical

| Code No. | Type | Version | Installation position |
|---|---|---|---|
| 910031 | 50 | 1 mm rising | Horizontal |
| 910032 | | 1 mm falling | Horizontal |
| 910033 | | 1 mm rising | Vertical |
| 910034 | | 1 mm falling | Vertical |
| 910035 | 80 | 1 mm rising | Horizontal |
| 910036 | | 1 mm falling | Horizontal |
| 910037 | | 1 mm rising | Vertical |
| 910038 | | 1 mm falling | Vertical |
| 910039 | 120 | 1 mm rising | Horizontal |
| 910040 | | 1 mm falling | Horizontal |
| 910041 | | 1 mm rising | Vertical |
| 910042 | | 1 mm falling | Vertical |

## Inductive limit switch

- The holder can be moved along the guide profile and fixed

**Material:** Holder made of aluminium, clear anodised
Galvanised fastenings

**Scope of delivery:** 1 limit switch with complete holder and fastenings



Additional spacer
for Type 120, height 9.5 mm

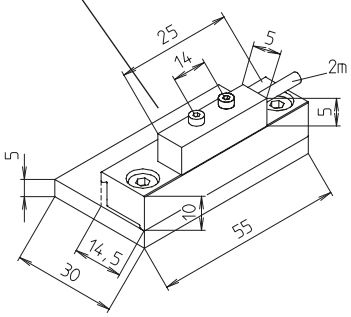


| Code No. | Type |
|---|---|
| 92818 | RK Compact 80 |
| 928112 | RK Compact 120 |

| | |
|---|---|
| Voltage | 10 - 30 V DC |
| Max. switching current | 200 mA |
| Max. starting current | 2 A for approx. 2 ms |
| Operating frequency | 700 Hz DIN EN 50010 |
| Mechanical lifetime | independent of operating cycles |
| Operating distance | 4 mm for steel |
| Protection class | IP 67 |
| Ambient temperature | -25°C to +80°C |

# Profile guide – SQL

## Low-cost guide
## for medium to heavy loads

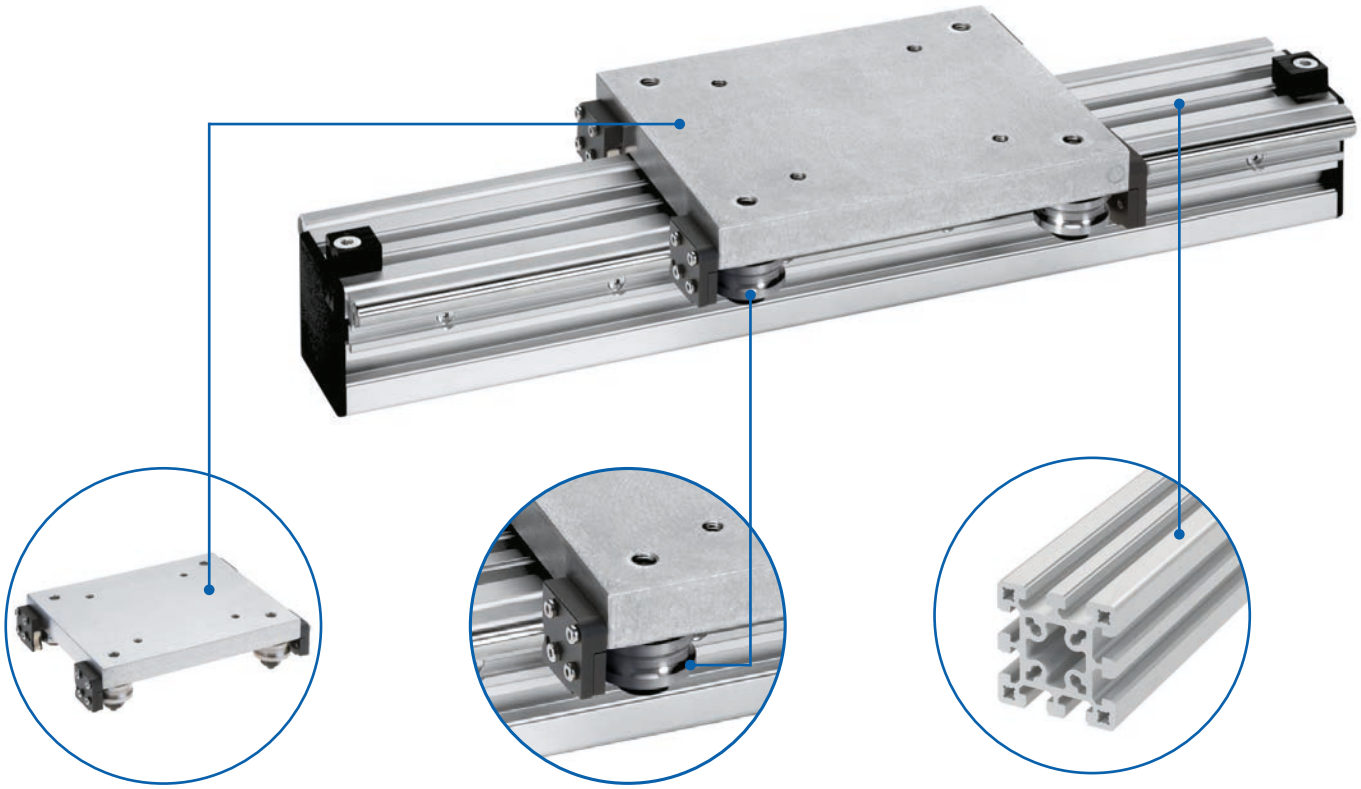

**Large carriage**
✓ Simple connection

**Adjustable rollers**
✓ Simple adjustment with zero back-lash

**BLOCAN basic profile**
✓ Quick and easy fixing thanks to profile slots

### Features:
- Guide profile made using BLOCAN® slot geometry
- Large, slimline carriage

### Options:
- Longer stroke lengths
- Second carriage

# SQL linear guide - Table of contents


## Properties/Technical data

- General information/operating conditions ... 198
- Load data ... 199

## Versions
**(Dimensions, order numbers)**

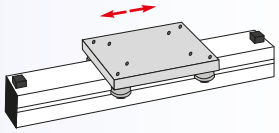

- SQL linear guide ... 200 - 201

## Accessories

**Drive**

- Carriage ... 202
- Wiper set ... 202

## General information/operating conditions

| | |
|---|---|
| **Design** | Guide element made using BLOCAN® profile, slimline carriage |
| **Guide** | Adjustable roller guide |
| **Installation position** | Any position |
| **Ambient temperature** | 0°C to +60°C |

## Load data*

F Force [N]

M Moment [Nm]

I Geometric moment of inertia [$cm^4$]

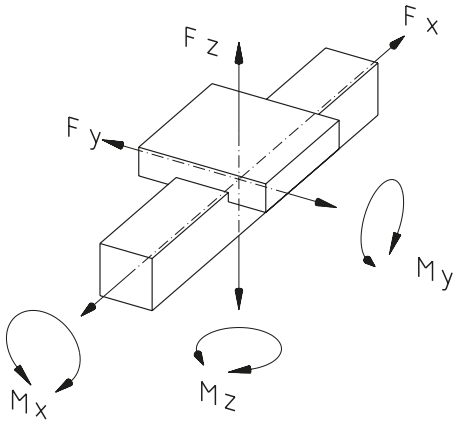


* With reference to carriage (static values, guide element resting on full surface)

| Type | Fy | Fz | Mx | My | Mz |
|---|---|---|---|---|---|
| SQL 40 | 1500 | 1000 | 50 | 70 | 140 |
| SQL 40 x 80 | 1500 | 1000 | 50 | 70 | 140 |
| SQL 60 | 2500 | 1500 | 66 | 95 | 169 |
| SQL 60 x 120 | 2500 | 1500 | 66 | 95 | 169 |
| SQL 80 x 40 | 2500 | 1500 | 82 | 88 | 200 |
| SQL 80 | 2500 | 1500 | 82 | 113 | 200 |
| SQL 80 x 160 | 2500 | 1500 | 82 | 113 | 200 |
| SQL 120 x 60 | 2500 | 1500 | 100 | 121 | 243 |
| SQL 160 x 80 | 2500 | 1500 | 134 | 82 | 243 |

## Geometric moment of inertia

[$cm^4$]

| Type | Iy | Iz |
|---|---|---|
| SQL 40 | 11,9 | 11,9 |
| SQL 40 x 80 | 19.4 | 76.0 |
| SQL 60 | 51.2 | 51.2 |
| SQL 60 x 120 | 94.7 | 372.3 |
| SQL 80 x 40 | 76.0 | 19.4 |
| SQL 80 | 155.3 | 155.3 |
| SQL 80 x 160 | 292.4 | 1090.0 |
| SQL 120 x 60 | 372.3 | 94.7 |
| SQL 160 x 80 | 1090.0 | 292.4 |

# SQL – Versions

**Order information:**

- Longer travel lengths on request

**Version** ■ **Guide**

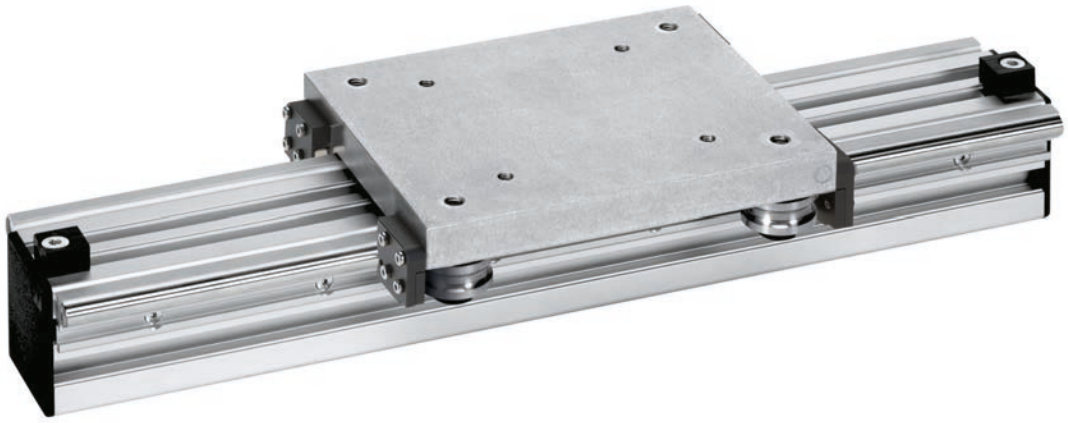

| Code No. | Type | Basic length | B | C | F | G | H |
|---|---|---|---|---|---|---|---|
| MCA4040AA | SQL 40 x 40 | 250 | 145 | 63 | 11 | M8-20 deep | 40 |
| MCA4080AA | SQL 40 x 80 | 250 | 145 | 103 | 51 | M8-20 deep | 80 |
| MCA6060AA | SQL 60 | 250 | 165 | 83 | 31 | M8-20 deep | 60 |
| MCA6012AA | SQL 60 x 120 | 250 | 165 | 143 | 91 | M8-20 deep | 120 |
| MCA8040AA | SQL 80 x 40 | 300 | 185 | 63 | 11 | M8-20 deep | 40 |
| MCA8080AA | SQL 80 | 300 | 185 | 103 | 51 | M8-20 deep | 80 |
| MCA8016AA | SQL 80 x 160 | 300 | 185 | 183 | 131 | M8-20 deep | 160 |
| MCA1260AA | SQL 120 x 60 | 350 | 225 | 83 | 31 | M8-20 deep | 60 |
| MCA1680AA | SQL 160 x 80 | 400 | 265 | 103 | 51 | M8-20 deep | 80 |

____ Total length = basic length + travel [mm]

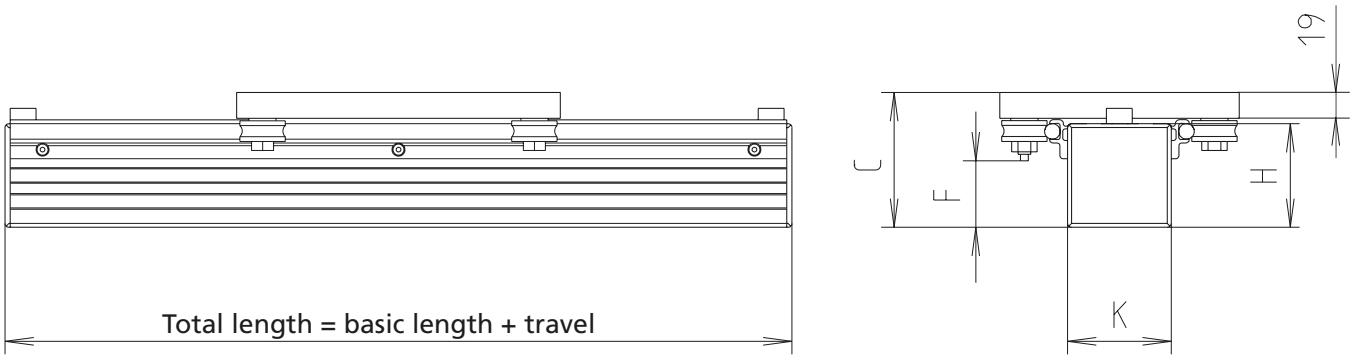


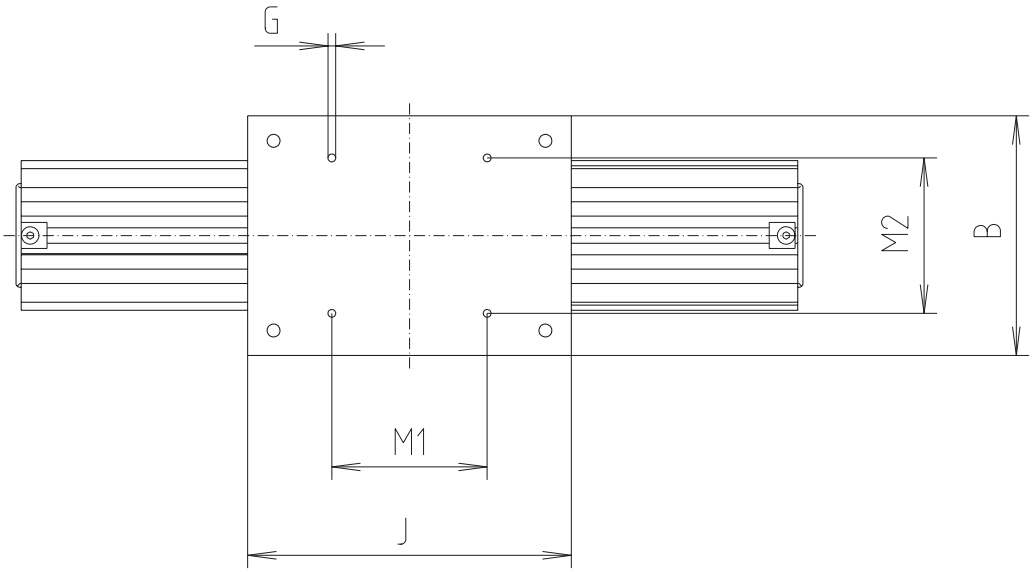


[mm]

| J | O | M1 | M2 | Max. travel | Mass [kg] | |
|---|---|---|---|---|---|---|
| | | | | | Basic length | per 100 mm travel |
| 200 | 40 | 80 | 80 | 5750 | 3.61 | 0.41 |
| 200 | 40 | 80 | 80 | 5750 | 4.00 | 0.58 |
| 200 | 60 | 100 | 100 | 5750 | 4.18 | 0.72 |
| 200 | 60 | 100 | 100 | 5750 | 5.07 | 1.06 |
| 250 | 80 | 120 | 120 | 5700 | 4.63 | 0.65 |
| 250 | 80 | 120 | 120 | 5700 | 5.94 | 1.00 |
| 250 | 80 | 120 | 120 | 5700 | 7.50 | 1.52 |
| 300 | 120 | 245 | 160 | 5650 | 5.07 | 1.06 |
| 350 | 160 | 285 | 200 | 5600 | 7.50 | 1.52 |

## Carriage

- Suitable for SQL manufactured from 03/96 onwards

**Material:** Al Mg Si, vibratory finished

**Scope of delivery:** Complete with mounting screws, wipers and rollers

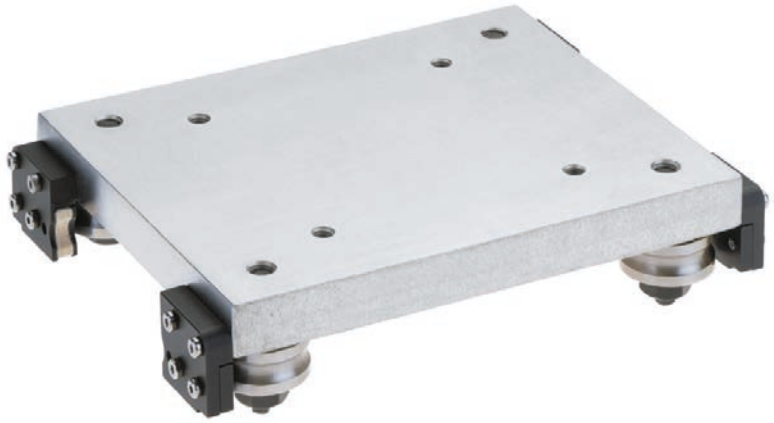

| Code No. | Type |
|---|---|
| 94451 | SQL 40/40 x 80 |
| 94452 | SQL 60/60 x 120 |
| 94453 | SQL 80 x 40 |
| 94454 | SQL 80/80 x 160 |
| 94455 | SQL 120 x 60 |
| 94456 | SQL 160 x 80 |

## Wiper set

- Complete upgrade kit for SQL carriage.
- The wipers can be screwed to the existing carriage without the need for any modification (on devices manufactured from 06/96 onwards).

**Scope of delivery:** Complete set for one carriage, 2 x left wipers, 2 x right wipers with fastenings



| Code No. | Type |
|---|---|
| 93921 | All SQL |

# Profile actuator – quad® EV

## Compact and versatile linear actuator for motor-driven and manual adjustment of medium loads

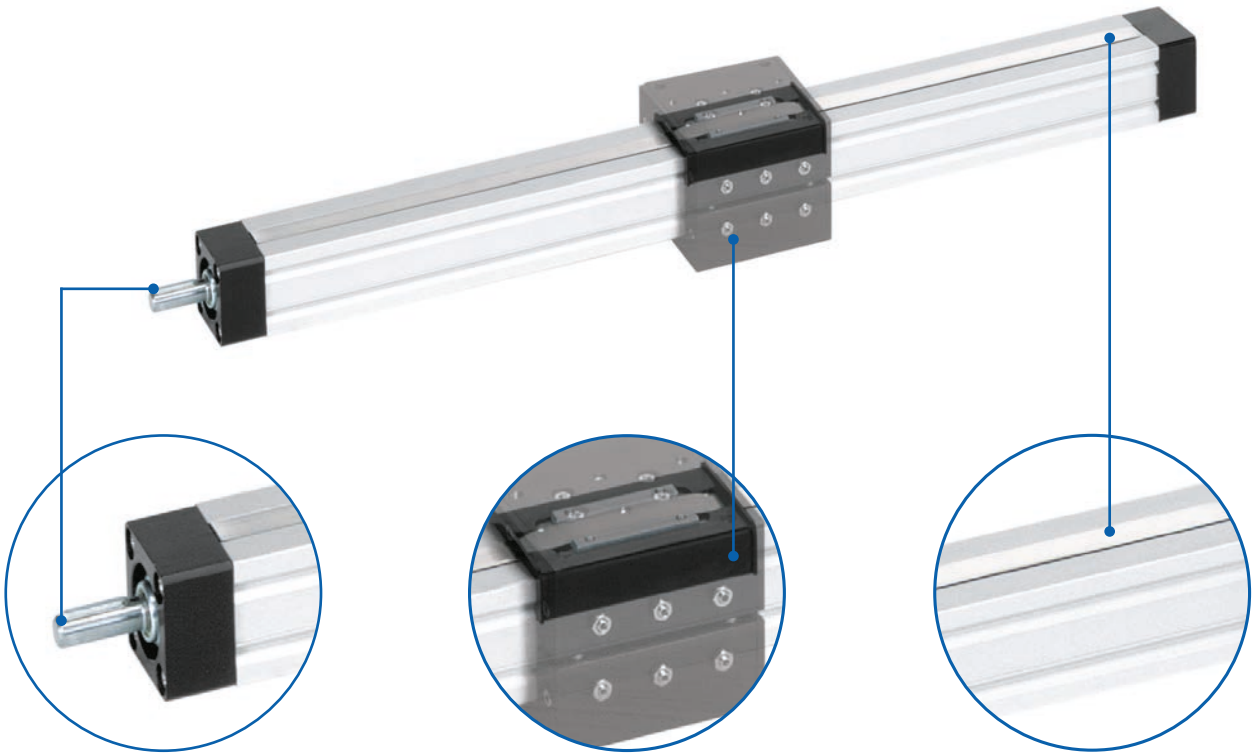

### Shafts
- ✓ Choice of 1 or 2 ball-bearing shafts

### Choice of carriages
- ✓ Wide range of models supports optimum integration in existing designs
- ✓ Adjustable slide guide

### Cover strip
- ✓ The drive screw is protected against contamination

### Features:
- Screw covered by steel band
- Wide range of carriage and fixing elements
- Comprehensive range of accessories

### Options:
- Second free-running carriage
- Longer stroke lengths

# quad® EV profile actuator - Table of contents


## Properties/Technical data

- General information/operating conditions ... 206
- Load data ... 207

## Versions
(Dimensions, order numbers)

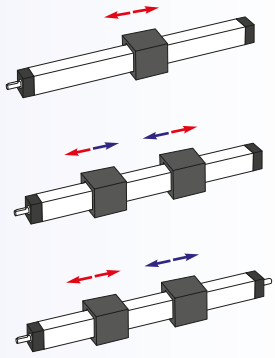

- EV right *or* lefthand thread ... 208 - 209
- EV right *and* lefthand thread ... 210 - 211
- EV *split* screw ... 212 - 213

## Accessories

**Fixing**

- Carriage ... 214 - 217
- Fixing elements/clamping lever ... 218 - 221

**Drive**

- Handwheel ... 222
- HTD timing belt pulley ... 223
- Angular drive/bevel gear set ... 224
- Combination flange/combination cube ... 225
- Connecting and transmission unit ... 226
- Motor adaptor/coupling ... 227 - 229

**Position determination**

- Scale/positioning indicator ... 230
- Limit switch ... 232 - 233

## General information/operating conditions

| | |
|---|---|
| Design | Linear actuator with extruded guide profile, choice of carriage models |
| Guide | Adjustable slide guide |
| Installation position | Any position |
| Lead accuracy | ± 0.15 mm/300 mm travel |
| Self-locking | Yes |
| Duty cycle | S3 30% Basic 1h |
| Ambient temperature | 0°C to +60°C |

## Screw lead

[mm]

| Type | Screw lead |
|---|---|
| EV 30 | 3 |
| EV 40 | 4 |
| EV 50 | 4 |
| EV 60 | 4 |
| EV 80 | 5 |

$$\text{Required screw speed n [rpm]} = \frac{\text{speed [m/min] x 1000}}{\text{screw lead [mm]}}$$

## Critical screw speed

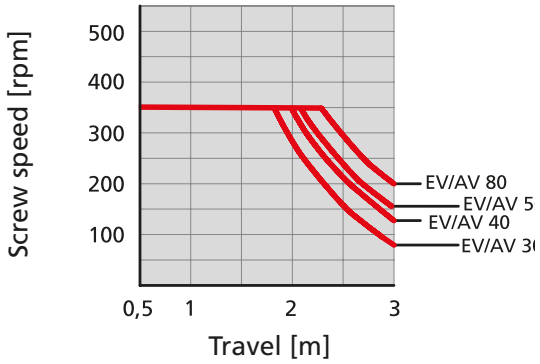


## No-load torque

[Nm]

| Type | "Open" carriage | "Closed" carriage |
|---|---|---|
| EV 30 | 0.30 | 0.45 |
| EV 40 | 0.45 | 0.55 |
| EV 50 | 0.50 | 0.60 |
| EV 60 | 0.65 | 0.75 |
| EV 80 | 0.80 | 0.90 |

## Load data*

F Force [N]

M Moment [Nm]

I Geometric moment of inertia [cm$^4$]

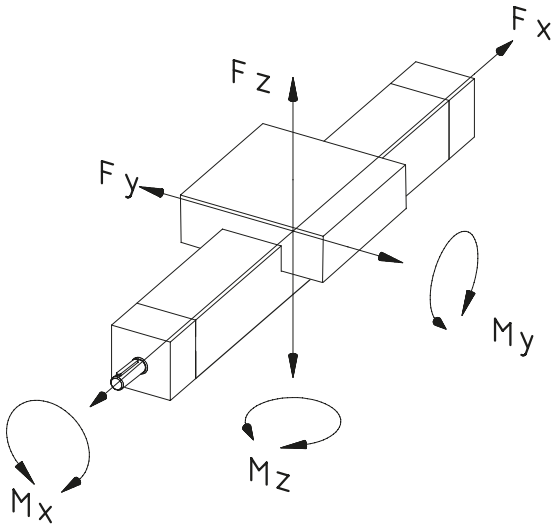


* referring to the "closed" guide table (guide element deflection f= 0,5 mm, static, end elements supported)

| Total length [mm] | Fx | Fy | | | Fz | | | Mx | My | Mz |
|---|---|---|---|---|---|---|---|---|---|---|
| | 500 | 500 | 1000 | 1500 | 500 | 1000 | 1500 | | | |
| Type | | | | | | | | | | |
| EV 30 | 800 | 600 | 70 | – | 600 | 70 | – | 6 | 11 | 8 |
| EV 40 | 1200 | 1500 | 110 | 35 | 1480 | 110 | 33 | 25 | 45 | 30 |
| EV 50 | 1800 | 2220 | 550 | 140 | 2300 | 550 | 135 | 55 | 74 | 50 |
| EV 60 | 2100 | 4070 | 1350 | 400 | 4090 | 1350 | 390 | 65 | 100 | 60 |
| EV 80 | 2500 | 6000 | 2300 | 720 | 6000 | 2300 | 715 | 80 | 140 | 85 |

## Geometric moment of inertia

[cm$^4$]

| Type | Iy | Iz |
|---|---|---|
| EV 30 | 4.13 | 4.71 |
| EV 40 | 13.33 | 13.79 |
| EV 50 | 33.72 | 34.31 |
| EV 60 | 64.22 | 60.33 |
| EV 80 | 200.00 | 192.72 |

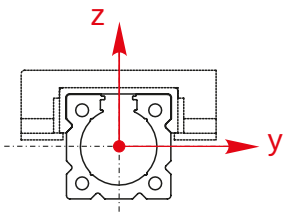

**Order information:**

- Choice of carriage - this must be ordered separately
- Second free-running carriage available on request

**Version** ■ **Right *or* lefthand thread**



| Code No. | Type | Spindle | Basic length | B | D 1 | D 2 | D 3 | J |
|---|---|---|---|---|---|---|---|---|
| 30_3000 | 30 | 14 x 3 | 96 | 30 | 8 | – | 22 $^{H7}$ | 60 |
| 30_3002 | 30 | 14 x 3 | 96 | 30 | 8 | 8 | 22 $^{H7}$ | 60 |
| 30_4000 | 40 | 18 x 4 | 115 | 40 | 10 | – | 28 $^{J6}$ | 71 |
| 30_4002 | 40 | 18 x 4 | 115 | 40 | 10 | 10 | 28 $^{J6}$ | 71 |
| 30_5000 | 50 | 20 x 4 | 140 | 50 | 12 | – | 35 $^{J6}$ | 90 |
| 30_5002 | 50 | 20 x 4 | 140 | 50 | 12 | 12 | 35 $^{J6}$ | 90 |
| 30_6000 | 60 | 20 x 4 | 199 | 60 | 12 | – | 35 $^{J6}$ | 115 |
| 30_6002 | 60 | 20 x 4 | 199 | 60 | 12 | 12 | 35 $^{J6}$ | 115 |
| 30_8000 | 80 | 24 x 5 | 218 | 80 | 14 | – | 50 $^{H7}$ | 136 |
| 30_8002 | 80 | 24 x 5 | 218 | 80 | 14 | 14 | 50 $^{H7}$ | 136 |

30_8002
- _ _ _ _ Total length = basic length + travel [mm]
- **Version:**
  1 = righthand thread
  2 = lefthand thread

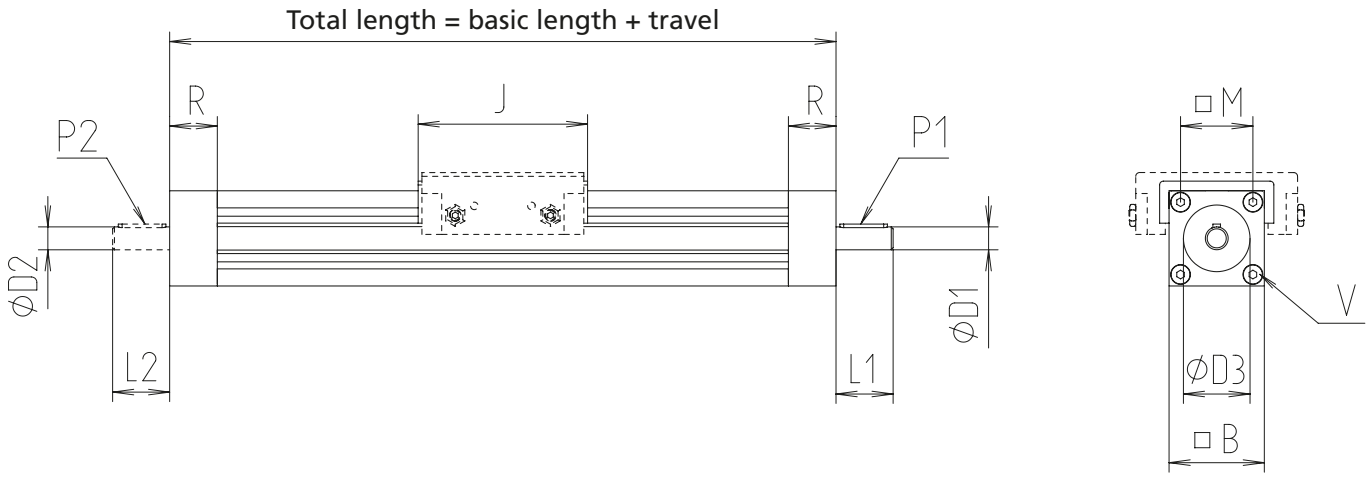


[mm]

| L 1 | L 2 | M | P 1 | P 2 | R | V | Max. travel | Mass [kg] | |
|---|---|---|---|---|---|---|---|---|---|
| | | | | | | | | Basic length | per 100 mm travel |
| 25 | – | 21 | 2 x 2 x 20 | – | 18 | M4 x 25 | 1479 | 0.300 | 0.220 |
| 25 | 25 | 21 | 2 x 2 x 20 | 2 x 2 x 20 | 18 | M4 x 25 | 1454 | 0.310 | 0.220 |
| 28 | – | 29 | 3 x 3 x 20 | – | 22 | M5 x 30 | 3157 | 0.690 | 0.400 |
| 28 | 28 | 29 | 3 x 3 x 20 | 3 x 3 x 20 | 22 | M5 x 30 | 3129 | 0.705 | 0.400 |
| 30 | – | 38 | 4 x 4 x 25 | – | 25 | M6 x 30 | 3130 | 1.410 | 0.530 |
| 30 | 30 | 38 | 4 x 4 x 25 | 4 x 4 x 25 | 25 | M6 x 30 | 3100 | 1.445 | 0.530 |
| 30 | – | 43 | 4 x 4 x 25 | – | 42 | M6 x 55 | 3071 | 2.023 | 0.605 |
| 30 | 30 | 43 | 4 x 4 x 25 | 4 x 4 x 25 | 42 | M6 x 55 | 3041 | 2.083 | 0.605 |
| 38 | – | 64 | 5 x 5 x 32 | – | 41 | M8 x 60 | 3044 | 4.250 | 1.000 |
| 38 | 38 | 64 | 5 x 5 x 32 | 5 x 5 x 32 | 41 | M8 x 60 | 3006 | 4.300 | 1.000 |

**Order information:**

- Choice of carriage - this must be ordered separately

**Version** ■ **Right *and* lefthand thread**

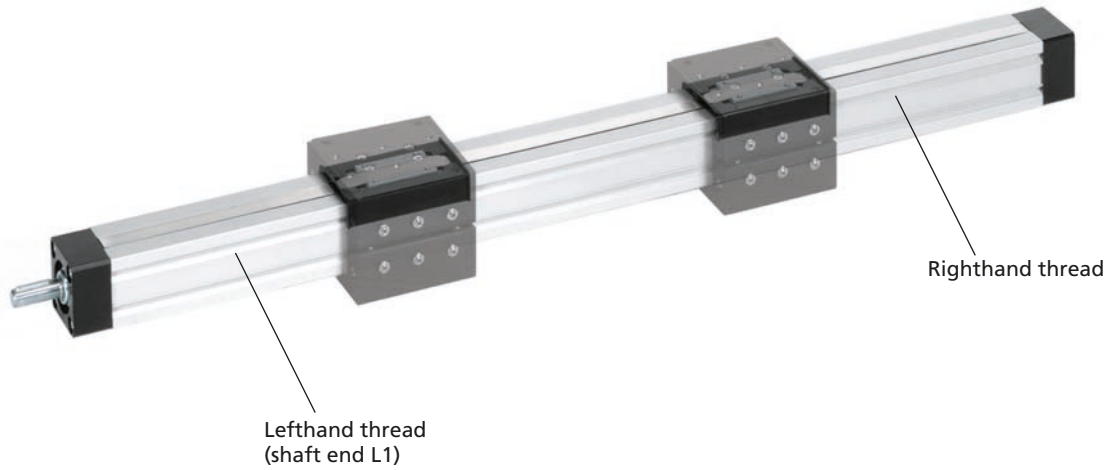


| Code No. | Type | Spindle | Basic length | B | D 1 | D 2 | D 3 | J |
|---|---|---|---|---|---|---|---|---|
| 3033000 | 30 | 14 x 3 | 156 | 30 | 8 | – | 22 $^{H7}$ | 60 |
| 3033001 | 30 | 14 x 3 | 156 | 30 | – | 8 | 22 $^{H7}$ | 60 |
| 3033002 | 30 | 14 x 3 | 156 | 30 | 8 | 8 | 22 $^{H7}$ | 60 |
| 3034000 | 40 | 18 x 4 | 186 | 40 | 10 | – | 28 $^{J6}$ | 71 |
| 3034001 | 40 | 18 x 4 | 186 | 40 | – | 10 | 28 $^{J6}$ | 71 |
| 3034002 | 40 | 18 x 4 | 186 | 40 | 10 | 10 | 28 $^{J6}$ | 71 |
| 3035000 | 50 | 20 x 4 | 230 | 50 | 12 | – | 35 $^{J6}$ | 90 |
| 3035001 | 50 | 20 x 4 | 230 | 50 | – | 12 | 35 $^{J6}$ | 90 |
| 3035002 | 50 | 20 x 4 | 230 | 50 | 12 | 12 | 35 $^{J6}$ | 90 |
| 3036000 | 60 | 20 x 4 | 314 | 60 | 12 | – | 35 $^{J6}$ | 115 |
| 3036001 | 60 | 20 x 4 | 314 | 60 | – | 12 | 35 $^{J6}$ | 115 |
| 3036002 | 60 | 20 x 4 | 314 | 60 | 12 | 12 | 35 $^{J6}$ | 115 |
| 3038000 | 80 | 24 x 5 | 354 | 80 | 14 | – | 50 $^{H7}$ | 136 |
| 3038001 | 80 | 24 x 5 | 354 | 80 | – | 14 | 50 $^{H7}$ | 136 |
| 3038002 | 80 | 24 x 5 | 354 | 80 | 14 | 14 | 50 $^{H7}$ | 136 |

_ _ _ _ Total length = basic length + total travel [mm]

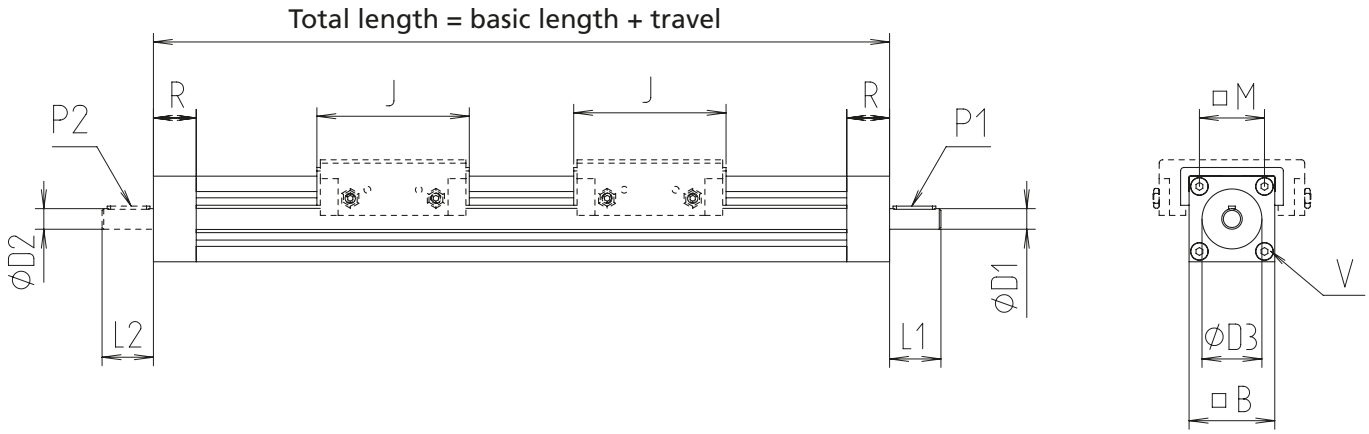


| L 1 | L 2 | M | P 1 | P 2 | R | V | Max. travel | Mass [kg] | |
|---|---|---|---|---|---|---|---|---|---|
| | | | | | | | | Basic length | per 100 mm travel |
| 25 | – | 21 | 2 x 2 x 20 | – | 18 | M4 x 25 | 1846 | 0.330 | 0.220 |
| – | 25 | 21 | – | 2 x 2 x 20 | 18 | M4 x 25 | 1846 | 0.330 | 0.220 |
| 25 | 25 | 21 | 2 x 2 x 20 | 2 x 2 x 20 | 18 | M4 x 25 | 1846 | 0.330 | 0.220 |
| 28 | – | 29 | 3 x 3 x 20 | – | 22 | M5 x 30 | 2814 | 0.740 | 0.400 |
| – | 28 | 29 | – | 3 x 3 x 20 | 22 | M5 x 30 | 2814 | 0.740 | 0.400 |
| 28 | 28 | 29 | 3 x 3 x 20 | 3 x 3 x 20 | 22 | M5 x 30 | 2814 | 0.755 | 0.400 |
| 30 | – | 38 | 4 x 4 x 25 | – | 25 | M6 x 30 | 2786 | 1.460 | 0.530 |
| – | 30 | 38 | – | 4 x 4 x 25 | 25 | M6 x 30 | 2786 | 1.460 | 0.530 |
| 30 | 30 | 38 | 4 x 4 x 25 | 4 x 4 x 25 | 25 | M6 x 30 | 2786 | 1.495 | 0.530 |
| 30 | – | 43 | 4 x 4 x 25 | – | 42 | M6 x 55 | 2702 | 2.856 | 0.605 |
| – | 30 | 43 | – | 4 x 4 x 25 | 42 | M6 x 55 | 2702 | 2.856 | 0.605 |
| 30 | 30 | 43 | 4 x 4 x 25 | 4 x 4 x 25 | 42 | M6 x 55 | 2702 | 2.916 | 0.605 |
| 38 | – | 64 | 5 x 5 x 32 | – | 41 | M8 x 60 | 2646 | 4.320 | 1.000 |
| – | 38 | 64 | – | 5 x 5 x 32 | 41 | M8 x 60 | 2646 | 4.320 | 1.000 |
| 38 | 38 | 64 | 5 x 5 x 32 | 5 x 5 x 32 | 41 | M8 x 60 | 2646 | 4.370 | 1.000 |

**Order information:**

- Choice of carriage - this must be ordered separately

**Version** ■ **Split screw**

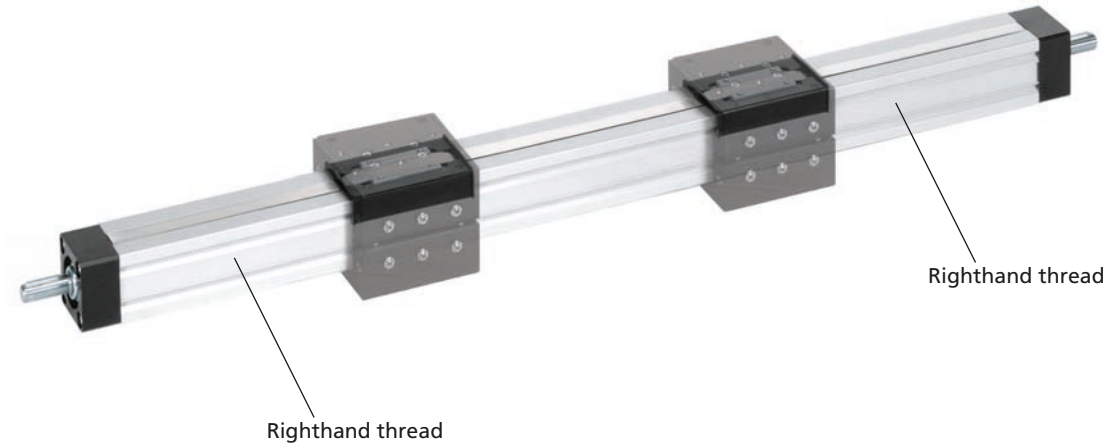


| Code No. | Type | Spindle | Basic length | B | D 1 | D 2 | D 3 | J |
|---|---|---|---|---|---|---|---|---|
| 3043002 | 30 | 14 x 3 | 156 | 30 | 8 | 8 | 22 H7 | 60 |
| 3044002 | 40 | 18 x 4 | 186 | 40 | 10 | 10 | 28 J6 | 71 |
| 3045002 | 50 | 20 x 4 | 230 | 50 | 12 | 12 | 35 J6 | 90 |
| 3046002 | 60 | 20 x 4 | 314 | 60 | 12 | 12 | 35 J6 | 115 |
| 3048002 | 80 | 24 x 5 | 354 | 80 | 14 | 14 | 50 H7 | 136 |

_ _ _ _ Total length = basic length + total travel [mm]

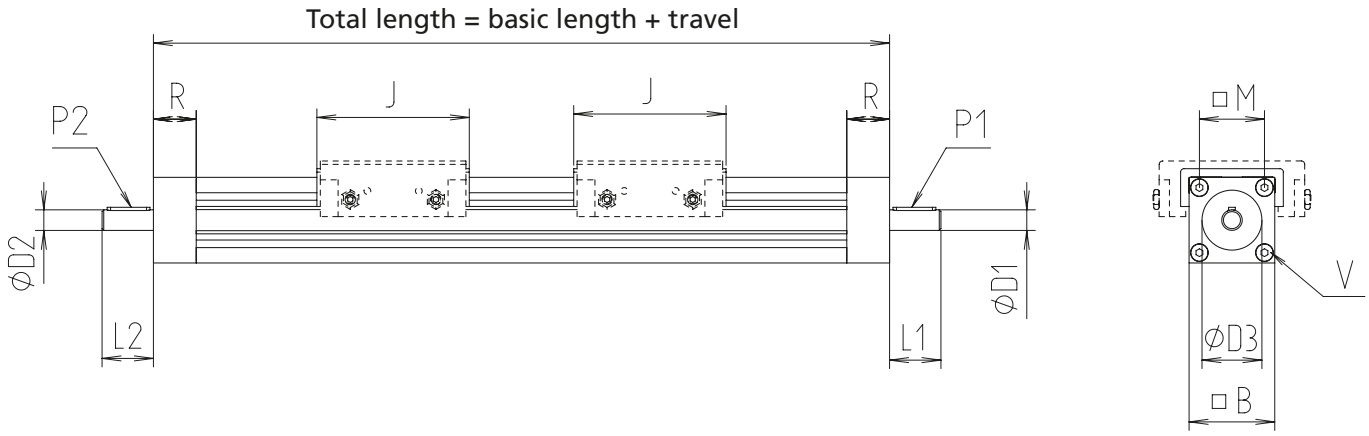


[mm]

| L 1 | L 2 | M | P 1 | P 2 | R | V | Max. travel/end | Mass [kg] | |
|---|---|---|---|---|---|---|---|---|---|
| | | | | | | | | Basic length | per 100 mm travel |
| 25 | 25 | 21 | 2 x 2 x 20 | 2 x 2 x 20 | 18 | M4 x 25 | 1422 | 0.380 | 0.220 |
| 28 | 28 | 29 | 3 x 3 x 20 | 3 x 3 x 20 | 22 | M5 x 30 | 1500 | 0.820 | 0.400 |
| 30 | 30 | 38 | 4 x 4 x 25 | 4 x 4 x 25 | 25 | M6 x 30 | 1885 | 1.560 | 0.530 |
| 30 | 30 | 43 | 4 x 4 x 25 | 4 x 4 x 25 | 42 | M6 x 55 | 1885 | 3.096 | 0.605 |
| 38 | 38 | 64 | 5 x 5 x 32 | 5 x 5 x 32 | 41 | M8 x 60 | 1885 | 4.655 | 1.000 |

**Order information:**

- Choice of carriage - this must be ordered separately
- Second free-running carriage available on request

## Carriage

- A range of different versions facilitate mounting

**Material:** Al Mg Si, black anodised

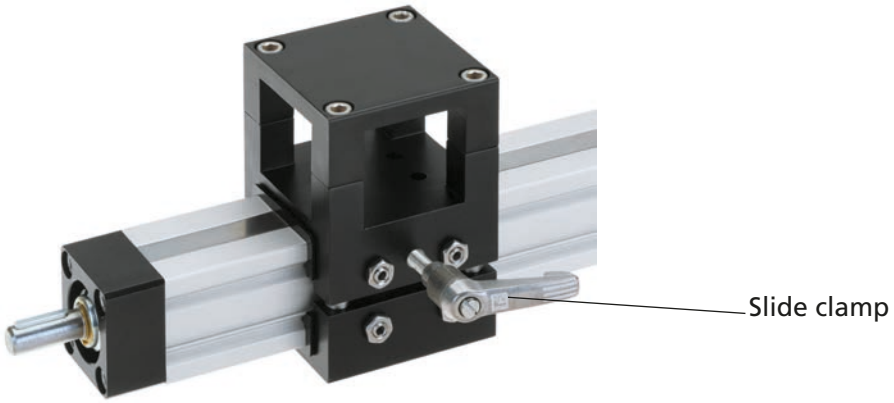


[mm]

### V-O

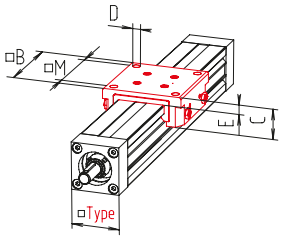


### V-G

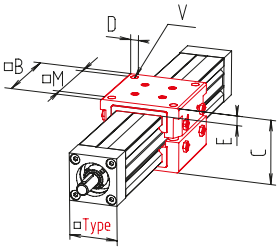


| Code No. | Version | Type | B | C | D | E | M | V |
|---|---|---|---|---|---|---|---|---|
| 5301_ | V-O | 30 | 56 | 20 | M 6 | 7 | 42 | – |
| 5302_ | V-G | 30 | 56 | 44 | M 6 | 7 | 42 | M6 x 30 |
| 5401_ | V-O | 40 | 68 | 26 | M 6 | 8 | 54 | – |
| 5402_ | V-G | 40 | 68 | 56 | M 6 | 8 | 54 | M6 x 35 |
| 5501_ | V-O | 50 | 85 | 33 | M 8 | 10 | 67 | – |
| 5502_ | V-G | 50 | 85 | 70 | M 8 | 10 | 67 | M8 x 45 |
| 5601_ | V-O | 60 | 105 | 45 | M 8 | 17.3 | 85 | – |
| 5602_ | V-G | 60 | 105 | 94.5 | M 8 | 17.3 | 85 | M8 x 60 |
| 5801_ | V-O | 80 | 126 | 52 | M10 | 16 | 105 | – |
| 5802_ | V-G | 80 | 126 | 112 | M10 | 16 | 105 | M10 x 70 |

**Slide clamp Equipment:**
0 = screws
1 = 1 lever
2 = 2 levers

[mm]

### FKV-O

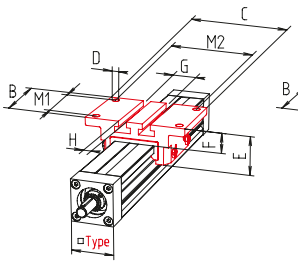


### FKV-G

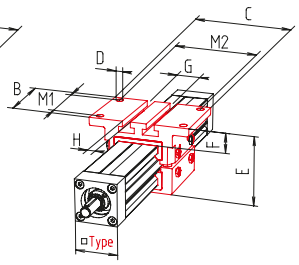


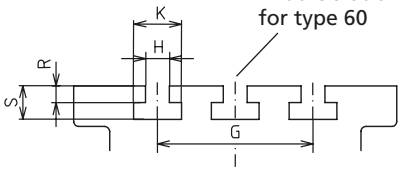


Type 80 without slot

| Code No. | Version | Type | B | C | D | E | F | G | H | K | M1 | M2 | R | S | V |
|---|---|---|---|---|---|---|---|---|---|---|---|---|---|---|---|
| 5303_ | FKV-O | 30 | 56 | 84 | 7 | 29 | 16 | 20 | 6 | 10 | 40 | 70 | 4.5 | 9 | – |
| 5304_ | FKV-G | 30 | 56 | 84 | 7 | 51 | 16 | 20 | 6 | 10 | 40 | 70 | 4.5 | 9 | M6 x 30 |
| 5403_ | FKV-O | 40 | 68 | 97 | 7 | 38 | 20 | 28 | 10 | 15 | 54 | 83 | 6.5 | 13 | – |
| 5404_ | FKV-G | 40 | 68 | 97 | 7 | 68 | 20 | 28 | 10 | 15 | 54 | 83 | 6.5 | 13 | M6 x 35 |
| 5503_ | FKV-O | 50 | 85 | 125 | 9 | 48 | 25 | 30 | 10 | 20 | 65 | 105 | 7 | 14 | – |
| 5504_ | FKV-G | 50 | 85 | 125 | 9 | 85 | 25 | 30 | 10 | 20 | 65 | 105 | 7 | 14 | M8 x 45 |
| 5603_ | FKV-O | 60 | 105 | 145 | 9 | 59 | 31.3 | 65 | 10 | 20 | 80 | 120 | 7 | 14 | – |
| 5604_ | FKV-G | 60 | 105 | 145 | 9 | 108.5 | 31.3 | 65 | 10 | 20 | 80 | 120 | 7 | 14 | M8 x 60 |
| 5803_ | FKV-O | 80 | 126 | 170 | 11 | 68 | 31 | – | – | 19 | 100 | 148 | 8 | 20 | – |
| 5804_ | FKV-G | 80 | 126 | 170 | 11 | 127 | 31 | – | – | 19 | 100 | 148 | 8 | 20 | M10 x 70 |

**Slide clamp Equipment:**
0 = screws
1 = 1 lever
2 = 2 levers

## Carriage

### KV-O

### KV-G

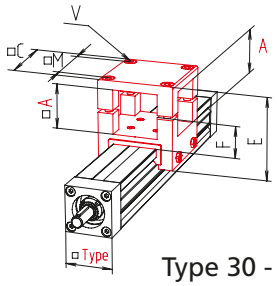


Type 30 - 60

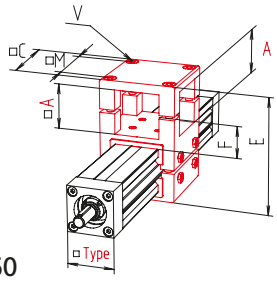


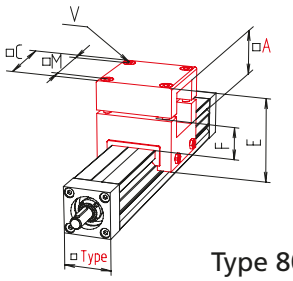


Type 80

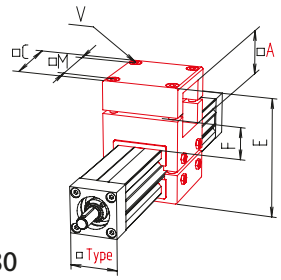


[mm]

| Code No. | Version | Type | A | C | E | F | M | V |
|---|---|---|---|---|---|---|---|---|
| 5305_ | KV-O | 30 | 30.2 | 56 | 56 | 22 | 42 | M6 x 30 |
| 5306_ | KV-G | 30 | 30.2 | 56 | 78 | 22 | 42 | M6 x 30 |
| 5405_ | KV-O | 40 | 40.4 | 68 | 75 | 28 | 54 | M6 x 35 |
| 5406_ | KV-G | 40 | 40.4 | 68 | 104 | 28 | 54 | M6 x 35 |
| 5505_ | KV-O | 50 | 50.4 | 85 | 94 | 35 | 67 | M8 x 45 |
| 5506_ | KV-G | 50 | 50.4 | 85 | 130 | 35 | 67 | M8 x 45 |
| 5605_ | KV-O | 60 | 60.4 | 105 | 117.5 | 48.3 | 85 | M8 x 60 |
| 5606_ | KV-G | 60 | 60.4 | 105 | 174 | 48.3 | 85 | M8 x 60 |
| 5805_ | KV-O | 80 | 80.4 | 126 | 165 | 72 | 100 | M10 x 70 |
| 5806_ | KV-G | 80 | 80.4 | 126 | 224 | 72 | 100 | M10 x 70 |

### KVR-O

### KVR-G

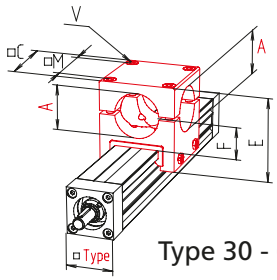


Type 30 - 60

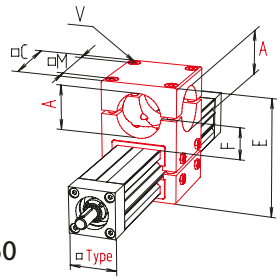


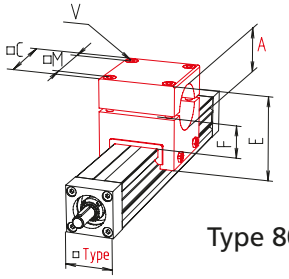


Type 80

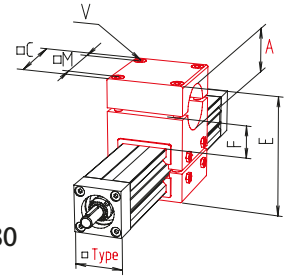


[mm]

| Code No. | Version | Type | A | C | E | F | M | V |
|---|---|---|---|---|---|---|---|---|
| 5307_ | KVR-O | 30 | 30.1 | 56 | 56 | 22 | 42 | M6 x 30 |
| 5308_ | KVR-G | 30 | 30.1 | 56 | 78 | 22 | 42 | M6 x 30 |
| 5407_ | KVR-O | 40 | 40.2 | 68 | 75 | 28 | 54 | M6 x 35 |
| 5408_ | KVR-G | 40 | 40.2 | 68 | 104 | 28 | 54 | M6 x 35 |
| 5507_ | KVR-O | 50 | 50.3 | 85 | 94 | 35 | 67 | M8 x 45 |
| 5508_ | KVR-G | 50 | 50.3 | 85 | 130 | 35 | 67 | M8 x 45 |
| 5607_ | KVR-O | 60 | 60.3 | 105 | 117.5 | 48.3 | 85 | M8 x 60 |
| 5608_ | KVR-G | 60 | 60.3 | 105 | 174 | 48.3 | 85 | M8 x 60 |
| 5807_ | KVR-O | 80 | 80.6 | 126 | 165 | 72 | 100 | M10 x 70 |
| 5808_ | KVR-G | 80 | 80.6 | 126 | 224 | 72 | 100 | M10 x 70 |

**Slide clamp Equipment:**
0 = screws
1 = 1 lever
2 = 2 levers

## Carriage

### KRD-O

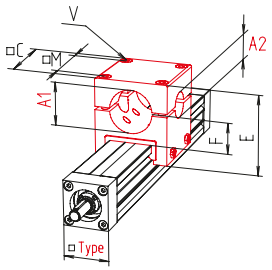


### KRD-G

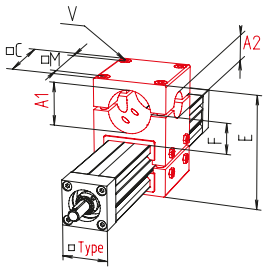


[mm]

| Code No. | Version | Type | A1 | A2 | C | E | F | M | V |
|---|---|---|---|---|---|---|---|---|---|
| 5409_ | KRD-O | 40 x 30 | 40 | 30.1 | 68 | 74.4 | 28 | 54 | M6 x 35 |
| 5410_ | KRD-G | 40 x 30 | 40 | 30.1 | 68 | 104 | 28 | 54 | M6 x 35 |
| 5509_ | KRD-O | 50 x 30 | 50 | 30.1 | 85 | 93 | 35 | 67 | M6 x 35 |
| 5510_ | KRD-G | 50 x 30 | 50 | 30.1 | 85 | 130 | 35 | 67 | M6 x 35 |
| 5609_ | KRD-O | 60 x 30 | 60 | 30.1 | 105 | 118 | 42 | 85 | M8 x 60 |
| 5610_ | KRD-G | 60 x 30 | 60 | 30.1 | 105 | 196 | 42 | 85 | M8 x 60 |

## WVR-G

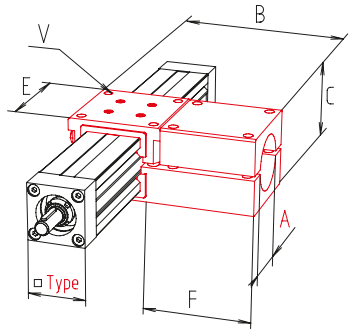


[mm]

| Code No. | Version | Type | A | B | C | E | F | V |
|---|---|---|---|---|---|---|---|---|
| 5311_ | WVR-G | 30 | 30.1 | 112 | 44 | 56 | 67 | M6 x 25 |
| 5411_ | WVR-G | 40 | 40.2 | 136 | 56 | 68 | 82 | M6 x 35 |
| 5511_ | WVR-G | 50 | 50.1 | 170 | 70 | 85 | 100 | M8 x 45 |
| 5611_ | WVR-G | 60 | 60.3 | 220 | 95.8 | 105 | 137.5 | M8 x 60 |

## WV-G

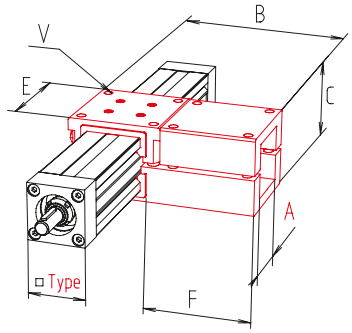


[mm]

| Code No. | Version | Type | A | B | C | E | F | V |
|---|---|---|---|---|---|---|---|---|
| 5312_ | WV-G | 30 | 30.2 | 112 | 44 | 56 | 67 | M6 x 30 |
| 5412_ | WV-G | 40 | 40.2 | 136 | 56 | 68 | 82 | M6 x 35 |
| 5512_ | WV-G | 50 | 50.4 | 170 | 70 | 85 | 100 | M8 x 45 |
| 5612_ | WV-G | 60 | 60.4 | 220 | 95.8 | 105 | 137.5 | M8 x 60 |

**Slide clamp**
**Equipment:**
0 = screws
1 = 1 lever
2 = 2 levers

## Carriage

### FV-G

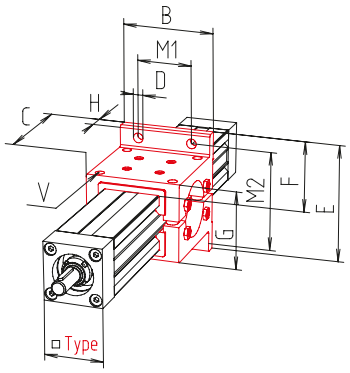


[mm]

| Code No. | Version | Type | B | C | D | E | F | G | H | M1 | M2 | V |
|---|---|---|---|---|---|---|---|---|---|---|---|---|
| 53130 | FV-G | 30 | 56 | 58 | 7 | 70 | 18 | 42 | 6 | 28 | 56 | M4 x 40 |
| 54130 | FV-G | 40 | 68 | 74 | 7 | 85 | 23 | 56 | 8 | 40 | 70 | M6 x 35 |
| 55130 | FV-G | 50 | 84 | 92 | 9 | 110 | 30 | 70 | 10 | 50 | 90 | M8 x 45 |
| 56130 | FV-G | 60 | 105 | 112 | 9 | 135.5 | 37.8 | 95.5 | 11.5 | 80 | 120 | M8 x 60 |
| 58130 | FV-G | 80 | 126 | 142 | 11 | 156 | 73.8 | 112 | 16 | 80 | 135 | M10 x 70 |

### EK-G

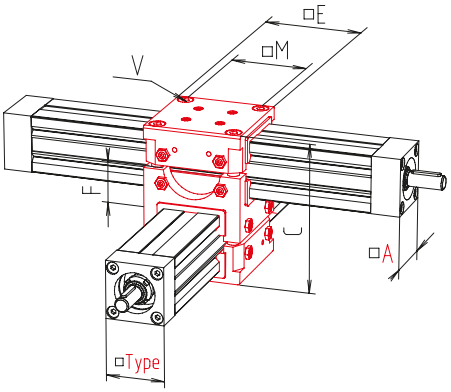


[mm]

| Code No. | Version | Type | A | C | E | F | M | V |
|---|---|---|---|---|---|---|---|---|
| 5314_ | EK-G | 30 | 30 | 81 | 56 | 22 | 42 | M6 x 30 |
| 5414_ | EK-G | 40 | 40 | 104 | 68 | 26.5 | 54 | M6 x 40 |
| 5514_ | EK-G | 50 | 50 | 130 | 85 | 35 | 67 | M8 x 45 |
| 5614_ | EK-G | 60 | 60 | 179 | 105 | 54.5 | 85 | M8 x 60 |
| 5814_ | EK-G | 80 | 80 | 224 | 126 | 72 | 105 | M10 x 70 |

### EKD-G

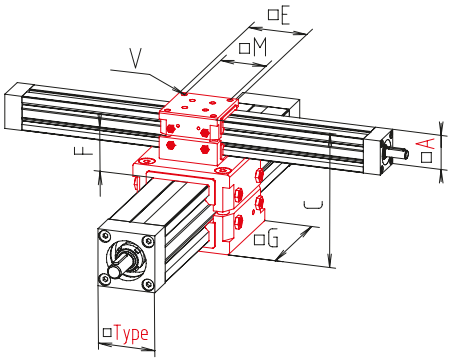


[mm]

| Code No. | Version | Type | A | C | E | F | G | M | V |
|---|---|---|---|---|---|---|---|---|---|
| 5515_ | EKD-G50/30 | 50 | 30 | 114 | 56 | 33 | 85 | 42 | M6 x 25 |
| 5815_ | EKD-G80/40 | 80 | 40 | 168 | 68 | 84 | 126 | 54 | M6 x 35 |

**Slide clamp**
**Equipment:**
0 = screws
1 = 1 lever
2 = 2 levers

**Order instructions:**

- Clamping levers have to be ordered separately. Delivery unassembled. See table last column and page 221.

- Clamping elements for the simple fixing of EV units
- For further elements, please refer to the catalogue “Connecting Technology”

**Material:** Al Mg Si 0,5 F25, clear anodised
DIN 912 screws

For further dimensions, please refer to the catalogue “Connecting Technology”

## Fixing elements

### FKV

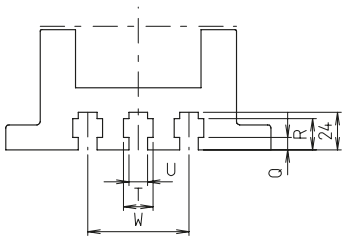


Centre slot only on types 60 and 80

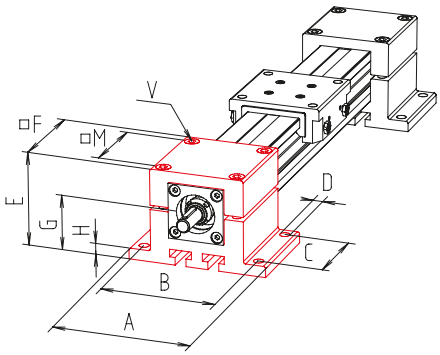


[mm]

| Code No. | Version | Type | A | B | C | D | E | F | G | H | M | Q | R | T | U | W | Clamping levers V Code No. VA |
|---|---|---|---|---|---|---|---|---|---|---|---|---|---|---|---|---|---|
| 52300005030 | FKV | 30 | 84 | 70 | 40 | 7 | 51 | 56 | 30 | 6 | 42 | 4,5 | 9 | 10 | 6 | 20 | 9300101 |
| 52400005030 | FKV | 40 | 97 | 83 | 54 | 7 | 68 | 68 | 40 | 8 | 54 | 6,5 | 13 | 15 | 10 | 28 | 93014 |
| 52500005030 | FKV | 50 | 125 | 105 | 65 | 9 | 85 | 85 | 50 | 10 | 67 | 7 | 14 | 20 | 10 | 30 | 93004 |
| 52600005030 | FKV | 60 | 145 | 120 | 80 | 9 | 111 | 105 | 62,5 | 12 | 80 | 7 | 14 | 20 | 10 | 65 | 93011 |
| 52800005030 | FKV | 80 | 170 | 148 | 100 | 11 | 136 | 126 | 80 | 16 | 100 | 8 | 20 | 19 | 12 | 65 | 9300801 |

### FKVH

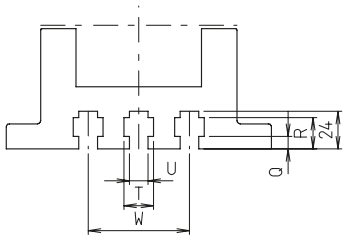


Centre slot only on types 60 and 80

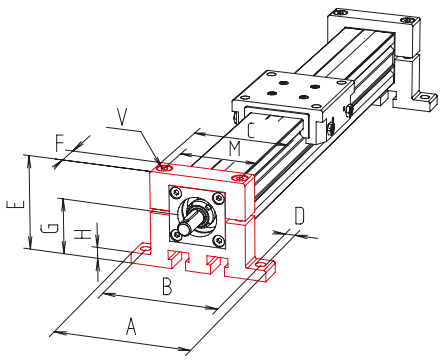


[mm]

| Code No. | Version | Type | A | B | C | D | E | F | G | H | M | Q | R | T | U | W | Clamping levers V Code No. VA |
|---|---|---|---|---|---|---|---|---|---|---|---|---|---|---|---|---|---|
| 52300010030 | FKVH | 30 | 84 | 70 | 56 | 7 | 51 | 16 | 30 | 6 | 42 | 4,5 | 9 | 10 | 6 | 20 | M6x25 |
| 52400010030 | FKVH | 40 | 97 | 83 | 68 | 7 | 68 | 18 | 40 | 8 | 54 | 6,5 | 13 | 15 | 10 | 28 | M6x35 |
| 52500010030 | FKVH | 50 | 125 | 105 | 85 | 9 | 85 | 20 | 50 | 10 | 67 | 7 | 14 | 20 | 10 | 30 | M8x45 |
| 52600010030 | FKVH | 60 | 145 | 120 | 105 | 9 | 111 | 22 | 62,5 | 12 | 80 | 7 | 14 | 20 | 10 | 65 | M8x60 |
| 52800010030 | FKVH | 80 | 170 | 148 | 126 | 11 | 136 | 24 | 80 | 16 | 100 | 8 | 20 | 19 | 12 | 65 | M10x70 |

## Fixing elements

### KVR

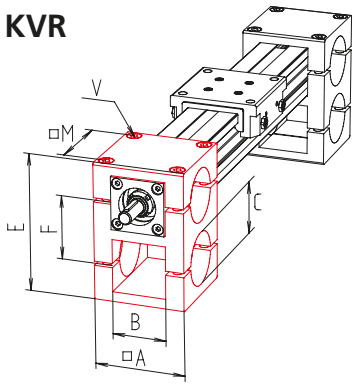


[mm]

| Code No. | Version | Type | A | B | C | E | F | M | Clamping levers V Code No. VA |
|---|---|---|---|---|---|---|---|---|---|
| 503000040300 | KVR | 30 | 56 | 30,1 | 30,1 | 78 | 36 | 42 | 9300101 |
| 504000040300 | KVR | 40 | 68 | 40,2 | 40,2 | 104 | 48 | 54 | 93014 |
| 505000040300 | KVR | 50 | 85 | 50,3 | 50,3 | 130 | 60 | 67 | 93004 |
| 506000040300 | KVR | 60 | 105 | 60,4 | 60,3 | 169 | 72 | 85 | 93011 |

### KV

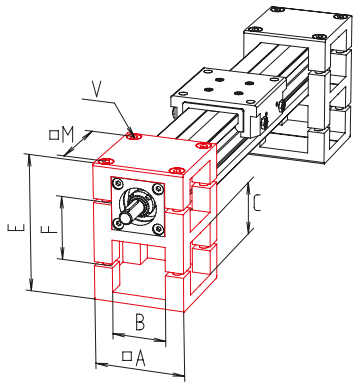


[mm]

| Code No. | Version | Type | A | B | C | E | F | M | Clamping levers V Code No. VA |
|---|---|---|---|---|---|---|---|---|---|
| 503000050300 | KV | 30 | 56 | 30,2 | 30,2 | 78 | 36 | 42 | 9300101 |
| 504000050300 | KV | 40 | 68 | 40,4 | 40,4 | 104 | 48 | 54 | 93014 |
| 505000050300 | KV | 50 | 85 | 50,4 | 50,4 | 130 | 60 | 67 | 93004 |
| 506000050300 | KV | 60 | 105 | 60,4 | 60,4 | 169 | 72 | 85 | 93011 |

### WVR

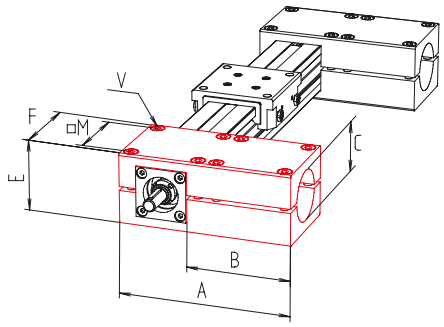


[mm]

| Code No. | Version | Type | A | B | C | E | F | M | Clamping levers V Code No. VA |
|---|---|---|---|---|---|---|---|---|---|
| 513000150300 | WVR | 30 | 112 | 69 | 30,2 | 42 | 56 | 42 | 9300101 |
| 514000150300 | WVR | 40 | 136 | 82 | 40,2 | 56 | 68 | 54 | 93041 |
| 515000150300 | WVR | 50 | 170 | 102 | 50,4 | 70 | 85 | 67 | 9300401 |
| 516000150300 | WVR | 60 | 210 | 127 | 60,3 | 97 | 105 | 85 | 93011 |

### WV

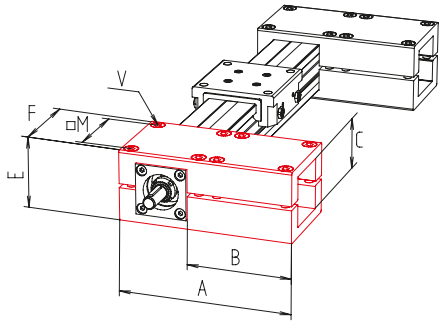


[mm]

| Code No. | Version | Type | A | B | C | E | F | M | Clamping levers V Code No. VA |
|---|---|---|---|---|---|---|---|---|---|
| 513000050300 | WV | 30 | 112 | 69 | 30,2 | 42 | 56 | 42 | 9300101 |
| 514000050300 | WV | 40 | 136 | 82 | 40,4 | 56 | 68 | 54 | 93014 |
| 515000050300 | WV | 50 | 170 | 102 | 50,4 | 70 | 85 | 67 | 9300401 |
| 516000050300 | WV | 60 | 210 | 127 | 60,4 | 97 | 105 | 85 | 93011 |

## FV

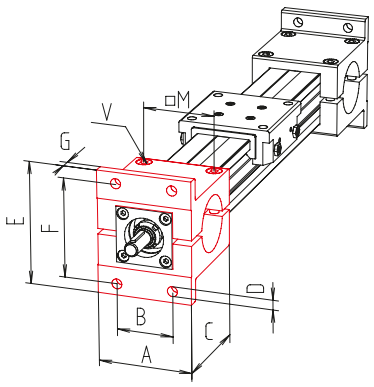


[mm]

| Code No. | Ver-sion | Type | A | B | C | D | E | F | G | M | Clamping levers V Code No. VA |
|---|---|---|---|---|---|---|---|---|---|---|---|
| 53300005030 | FV | 30 | 56 | 28 | 58 | 7 | 70 | 56 | 6 | 42 | 9300101 |
| 53400005030 | FV | 40 | 68 | 40 | 74 | 7 | 85 | 70 | 8 | 54 | 93014 |
| 53500005030 | FV | 50 | 84 | 50 | 92 | 9 | 110 | 90 | 10 | 64 | 93004 |
| 53600005030 | FV | 60 | 105 | 80 | 112,5 | 9 | 137 | 120 | 12 | 85 | 93011 |
| 53800005030 | FV | 80 | 126 | 80 | 142 | 11 | 156 | 135 | 16 | 100 | 9300801 |

## FHV

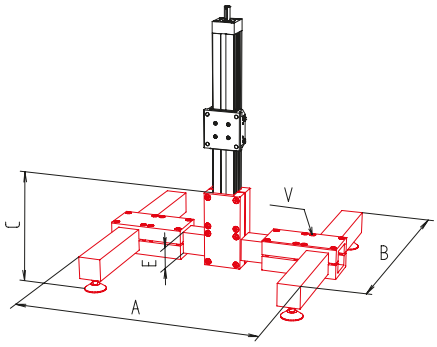


[mm]

| Code No. | Version | Type | A | B | C | E | Clamping levers V Code No. VA |
|---|---|---|---|---|---|---|---|
| 53300008030 | FHV | 30 | 350 | 350 | 114 | 30 | 9300101 |
| 53400008030 | FHV | 40 | 400 | 400 | 137 | 40 | 93014 |
| 53500008030 | FHV | 50 | 500 | 500 | 127 | 50 | 93004 |
| 53600008030 | FHV | 60 | 600 | 600 | 220 | 60 | 93011 |

## FRS

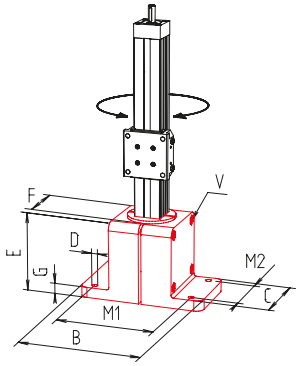


[mm]

| Code No. | Ver-sion | Type | B | C | D | E | F | G | M1 | M2 | Clamping levers V Code No. VA |
|---|---|---|---|---|---|---|---|---|---|---|---|
| 53300018030 | FRS | 30 | 110 | 84 | 9 | 92 | 70 | 10 | 90 | 50 | 93004 |
| 53500018030 | FRS | 50 | 156 | 126 | 11 | 142 | 126 | 16 | 135 | 80 | 9300801 |

## Clamping levers

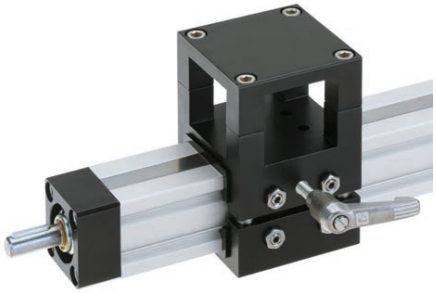

For slide clamp



For component clamp

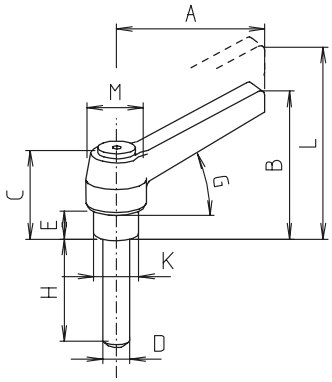


[mm]

| Code No. VA | Type | A | B | C | D | E | G | H | K | L | M |
|---|---|---|---|---|---|---|---|---|---|---|---|
| For slide clamp | | | | | | | | | | | |
| 93020 | 30 | 40 | 33.5 | 27 | M5 | 5.5 | 20° | 15 | 8,5 | 37.5 | 13.5 |
| 9300101 | 40 / 50 | 40 | 33.5 | 27 | M6 | 6.5 | 20° | 25 | 10 | 37.5 | 13.5 |
| 93019 | 60 | 45 | 35 | 22 | M6 | 4 | 25° | 20 | 10 | 38 | 13 |
| 93012 | 80 | 65 | 45 | 31 | M8 | 8.5 | 20° | 25 | 13 | 48 | 18 |
| For component clamp | | | | | | | | | | | |
| 9300101 | 30 | 40 | 27 | 27 | M6 | 6.5 | 20° | 30 | 10 | 31 | 13.5 |
| 93014 | 40 | 40 | 33.4 | 27 | M6 | 6.5 | 20° | 35 | 10 | 37.5 | 13.5 |
| 93004 | 50 | 65 | 45 | 31 | M8 | 8.5 | 20° | 45 | 13 | 49 | 18 |
| 93011 | 60 | 65 | 45 | 31 | M8 | 8.5 | 20° | 60 | 13 | 49 | 18 |
| 9300801 | 80 | 92 | 62 | 42 | M10 | 10 | 20° | 70 | 16 | 66 | – |

## Handwheel

- Rotating cylindrical grip
- Fully turned wheel rim
- Machined hub

**Material:** Aluminium die cast, black powder-coated



Ø 140-200



Ø 80-100

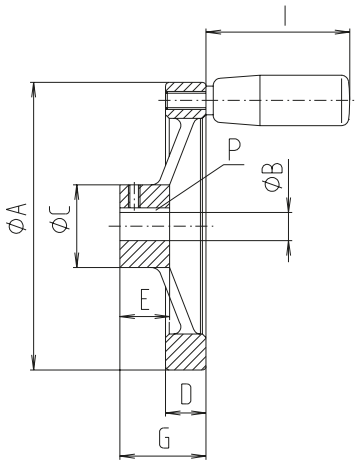


[mm]

| Code No. | Type | A | B | C | D | E | G | P | I |
|---|---|---|---|---|---|---|---|---|---|
| 90903 | 30 | 80 | 8 | 23 | 11 | 17 | 35 | 2 x 2 | 42 |
| 90904 | 40 | 100 | 10 | 28 | 14 | 17 | 30 | 3 x 3 | 52 |
| 90915 | 50/60 | 100 | 12 | 28 | 14 | 17 | 30 | 4 x 4 | 52 |
| 90905 | 50/60 | 140 | 12 | 36 | 16.5 | 19 | 36 | 4 x 4 | 66 |
| 90906 | 80 | 140 | 14 | 36 | 16.5 | 19 | 36 | 5 x 5 | 66 |
| 90918 | 80 | 160 | 14 | 36 | 18 | 20 | 39 | 5 x 5 | 80 |
| 90928 | 80 | 200 | 14 | 43 | 20 | 24 | 44 | 5 x 5 | 80 |

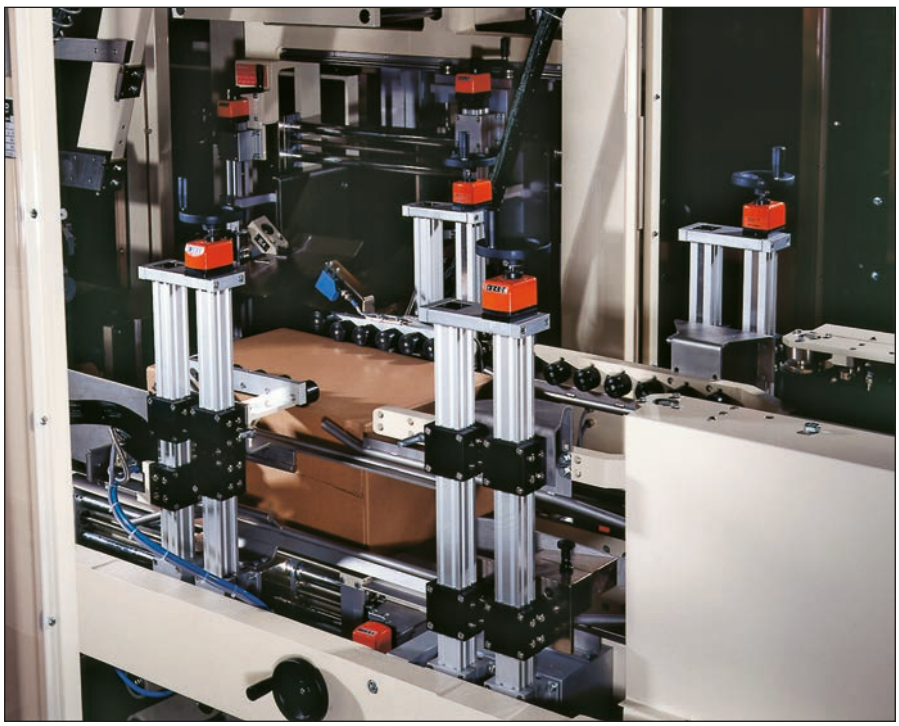

Format adjustment of a packaging system by means of quad EV linear unit

## HTD timing-belt pulley

- Suitable for maintenance-free continuous operation
- Excellent accuracy and zero backlash during change of direction
- Can be clamped on feather key

**Material:** Steel



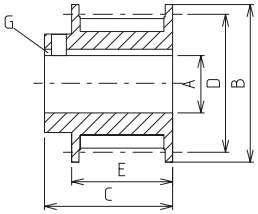


[mm]

| Code No. | Type | A | B | C | D | E | G | Pull force | Pitch |
|---|---|---|---|---|---|---|---|---|---|
| 92103 | 30 | 8 | 23 | 20 | 19.09 | 14.5 | 2x2 | 220 N | 5 |
| 92104 | 40 | 10 | 28 | 20 | 23.87 | 14.5 | 3x3 | 220 N | 5 |
| 92105 | 50 | 12 | 32 | 26 | 28.65 | 20.5 | 4x4 | 330 N | 5 |
| 92106 | 60 | 14 | 32 | 26 | 28.65 | 20.5 | 5x5 | 330 N | 5 |

## Angular drive

- Simple assembly
- Self-centring



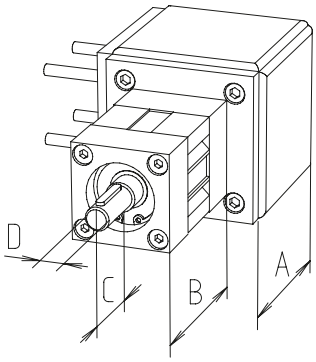


[mm]

| Code No. | Type | A | B | C | D | Ratio | Module | No. of teeth | Max. torque | Max. speed |
|---|---|---|---|---|---|---|---|---|---|---|
| 91503 | 30 | 50 | 60 | 25 | 8 | 1:1 | 1.5 | 16 | 5.5 Nm | 560 rpm |
| 91513 | 30 | 50 | 60 | 25 | 8 | 1:1.5 | 1.5 | 16/24 | 5 Nm | 373/560 rpm |
| 91534 | 40 | 60 | 80 | 28 | 10 | 1:1 | 1.5 | 16 | 5.5 Nm | 560 rpm |
| 91524 | 40 | 60 | 80 | 28 | 10 | 1:1.5 | 1.5 | 16/24 | 5 Nm | 373/560 rpm |
| 91505 | 50 | 78 | 80 | 30 | 12 | 1:1 | 2.5 | 16 | 16 Nm | 560 rpm |
| 91515 | 50 | 78 | 80 | 30 | 12 | 1:1.5 | 2 | 16/24 | 10 Nm | 373/560 rpm |
| 91507 | 60 | 88 | 125 | 30 | 12 | 1:1 | 2.5 | 16 | 16 Nm | 560 rpm |
| 91517 | 60 | 88 | 125 | 30 | 12 | 1:1.5 | 2 | 16/24 | 10 Nm | 373/560 rpm |
| 91508 | 80 | 108 | 140 | 38 | 14 | 1:1 | 2.5 | 22 | 28 Nm | 560 rpm |
| 91518 | 80 | 108 | 140 | 38 | 14 | 1:1.5 | 2.5 | 16/24 | 23 Nm | 373/560 rpm |

## Bevel gear set

- Straight toothed
- Pressure angle 20°
- Shaft angle 90°
- Crowned tooth faces
- Can be clamped on feather key

**Material:** Steel C45



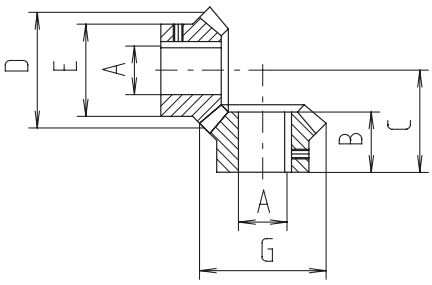


[mm]

| Code No. | Type | A | B | C | D | E | G | Ratio | No. of teeth | Module |
|---|---|---|---|---|---|---|---|---|---|---|
| 91603 | Set 30 | 8 | 15 | 24 | 24 | 18 | 26.11 | 1:1 | 16 | 1.5 |
| 91613 | Set 30 | 8 | 17/17.5 | 30/27 | 24/36 | 18/18 | 26.49/37.67 | 1:1.5 | 16/24 | 1.5 |
| 91623 | Single component 30 | 8 | 15 | 24 | 24 | 18 | 26.11 | 1:1 | 16 | 1.5 |
| 91663 | Single component 30 | 8 | 17 | 30 | 24 | 18 | 26.49 | 1:1.5 | 16 | 1.5 |
| 91673 | Single component 30 | 8 | 17.5 | 27 | 36 | 18 | 37.67 | 1:1.5 | 24 | 1.5 |
| 91614 | Set 40 | 10 | 16 | 27 | 28.5 | 24 | 30.62 | 1:1 | 19 | 1.5 |
| 91624 | Set 40 | 10 | 17/17.5 | 30/27 | 24/36 | 20/26 | 26.49/37.67 | 1:1.5 | 16/24 | 1.5 |
| 91674 | Single component 40 | 10 | 16 | 27 | 28.5 | 24 | 30.62 | 1:1 | 19 | 1.5 |
| 91684 | Single component 40 | 10 | 17 | 30 | 24 | 20 | 26.49 | 1:1.5 | 16 | 1.5 |
| 91694 | Single component 40 | 10 | 17.5 | 27 | 36 | 26 | 37.67 | 1:1.5 | 24 | 1.5 |
| 91605 | Set 50 | 12 | 22 | 37 | 40 | 32 | 43.5 | 1:1 | 16 | 2.5 |
| 91615 | Set 50 | 12 | 21/23 | 38/35 | 32/48 | 26/35 | 35.3/50.2 | 1:1.5 | 16/24 | 2 |
| 91625 | Single component 50 | 12 | 22 | 37 | 40 | 32 | 43.5 | 1:1 | 16 | 2.5 |
| 91665 | Single component 50 | 12 | 21 | 38 | 32 | 26 | 35.3 | 1:1.5 | 16 | 2 |
| 91645 | Single component 50 | 12 | 23 | 35 | 48 | 35 | 50.2 | 1:1.5 | 24 | 2 |
| 91605 | Set 60 | 12 | 22 | 37 | 40 | 32 | 43.5 | 1:1 | 16 | 2.5 |
| 91615 | Set 60 | 12 | 21/23 | 38/35 | 32/48 | 26/35 | 35.3/50.2 | 1:1.5 | 16/24 | 2 |
| 91625 | Single component 60 | 12 | 22 | 37 | 40 | 32 | 43.5 | 1:1 | 16 | 2.5 |
| 91665 | Single component 60 | 12 | 21 | 38 | 32 | 26 | 35.3 | 1:1.5 | 16 | 2 |
| 91645 | Single component 60 | 12 | 23 | 35 | 48 | 35 | 50.2 | 1:1.5 | 24 | 2 |
| 91608 | Set 80 | 14 | 28 | 48 | 55 | 40 | 58.53 | 1:1 | 22 | 2.5 |
| 91618 | Set 80 | 14 | 25/27 | 46/42 | 40/60 | 32/42 | 44.16/62.77 | 1:1.5 | 16/24 | 2.5 |
| 91648 | Single component 80 | 14 | 28 | 48 | 55 | 40 | 58.53 | 1:1 | 22 | 2.5 |
| 91678 | Single component 80 | 14 | 25 | 46 | 40 | 32 | 44.16 | 1:1.5 | 16 | 2.5 |
| 91668 | Single component 80 | 14 | 27 | 42 | 60 | 42 | 62.77 | 1:1.5 | 24 | 2.5 |

## Combination flange

- Simple assembly with linear units and combination cubes
- Exact fit due to centering shoulders

**Material:** AlMgSi, black anodised



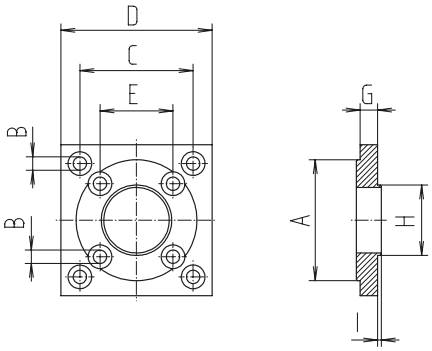


[mm]

| Code No. | Type | A | B | C | D | E | G | H | I |
|---|---|---|---|---|---|---|---|---|---|
| 92303 | 30 | $38_{f7}$ | 4.3 | 36 | 50 | 21 | 6 | $22_{f7}$ | 2 |
| 92304 | 40 | $48_{f7}$ | 5.3 | 45 | 60 | 29 | 7 | $28_{f7}$ | 1.5 |
| 92305 | 50 | $50_{f7}$ | 6.6 | 58 | 78 | 38 | 8 | $35_{f7}$ | 2 |
| 92307 | 60 | $60_{f7}$ | 6.4 | 68 | 88 | 43 | 8 | $35_{f7}$ | 2 |
| 92308 | 80 | $80_{f7}$ | 9 | 88 | 108 | 46 | 9 | $50_{f7}$ | 3 |

## Combination cube

- Connecting or transmission module
- Machined all-round

**Material:** AlMgSi, black anodised



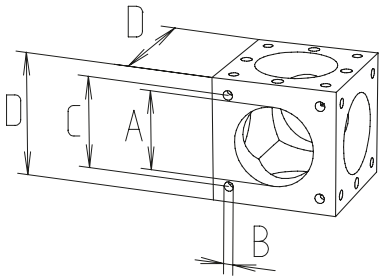


[mm]

| Code No. | Type | A | B | C | D |
|---|---|---|---|---|---|
| 92403 | 30 | $38^{H7}$ | M 4 | 36 | 50 |
| 92404 | 40 | $48^{H7}$ | M 5 | 45 | 60 |
| 92405 | 50 | $50^{H7}$ | M 6 | 58 | 78 |
| 92407 | 60 | $60^{H7}$ | M6 | 68 | 88 |
| 92408 | 80 | $80^{H7}$ | M 8 | 88 | 108 |

## Cap for combination cube

- For contact-free mounting surfaces

**Material:** PE, black



[mm]

| Code No. | Type | Cap thickness |
|---|---|---|
| 92413 | 30 | 2 |
| 92414 | 40 | 3 |
| 92415 | 50 | 3 |
| 92417 | 60 | 3 |
| 92418 | 80 | 4 |

## Connecting and transmission unit

- For the transmission of torques with shaft or as a connecting unit without shaft for parallel linear units

**Material:** End elements, AlMgSi, black anodised
Profile, AlMgSi, clear anodised



Transmission unit

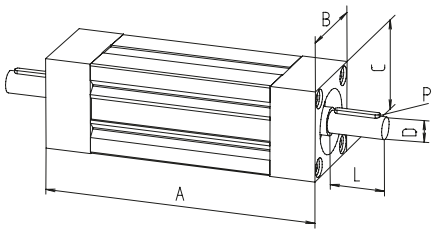




Connecting unit

[mm]

| Code No. | Type | Version | A (basic length) | B | C | D | L | P |
|---|---|---|---|---|---|---|---|---|
| 92503_ _ _ _ | 30 | with shaft | 60 | 30 | 30 | 8 | 25 | 2 x 2 x 20 |
| 92513_ _ _ _ | 30 | without shaft | 60 | 30 | 30 | – | – | – |
| 92504_ _ _ _ | 40 | with shaft | 80 | 40 | 40 | 10 | 28 | 3 x 3 x 20 |
| 92514_ _ _ _ | 40 | without shaft | 80 | 40 | 40 | – | – | – |
| 92505_ _ _ _ | 50 | with shaft | 80 | 50 | 50 | 12 | 30 | 4 x 4 x 25 |
| 92515_ _ _ _ | 50 | without shaft | 80 | 50 | 50 | – | – | – |
| 92507_ _ _ _ | 60 | with shaft | 125 | 60 | 60 | 12 | 30 | 4 x 4 x 25 |
| 92517_ _ _ _ | 60 | without shaft | 125 | 60 | 60 | – | – | – |
| 92508_ _ _ _ | 80 | with shaft | 140 | 80 | 80 | 14 | 38 | 5 x 5 x 32 |
| 92518_ _ _ _ | 80 | without shaft | 140 | 80 | 80 | – | – | – |

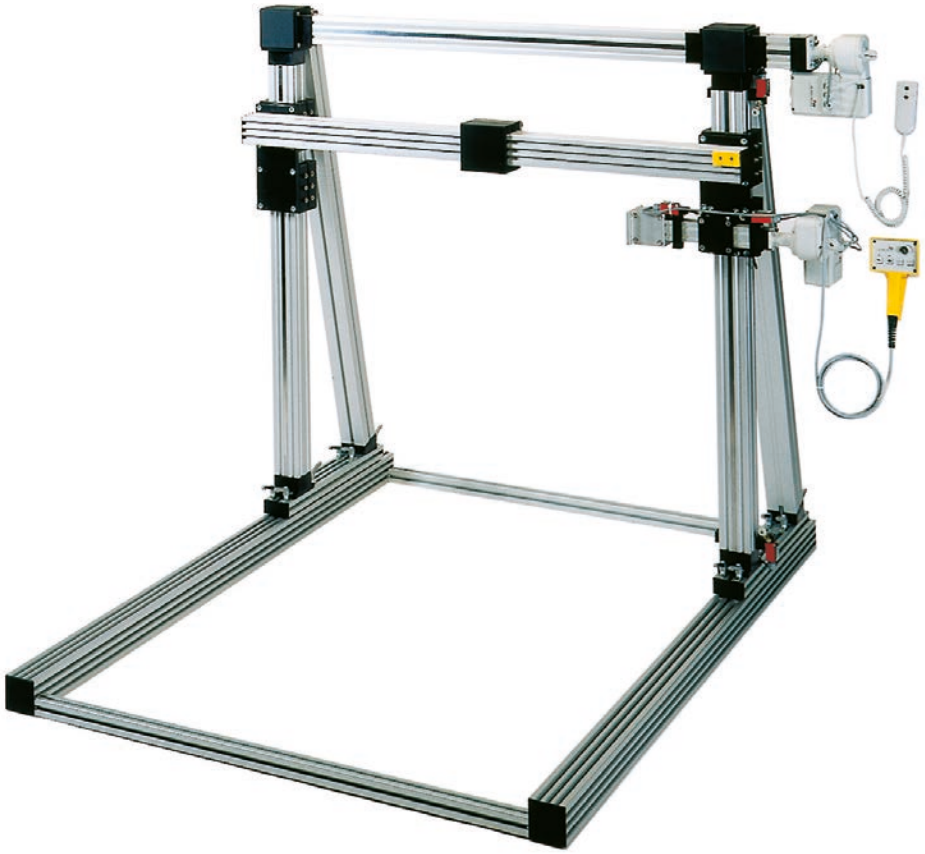

## Selection table
## Motor adaptor/EV coupling



| Type | Servomotor without gear | | | Three-phase motor | |
|---|---|---|---|---|---|
| | RK-AC 118 | RK-AC 240 | RK-AC 470 | 90/120W | 180/250 W |
| EV 30 | 949204 | – | – | 949603 | |
| | 911430 0811 | – | – | 910920 0812 | |
| EV 40 | 949205 | 949280 | – | 94937 | 94916 |
| | 911430 1011 | 911430 1014 | – | 911430 1012 | 911430 1014 |
| EV 50 | 949206 | 949225 | – | 949605 | 94935 |
| | 911430 1112 | 911430 1214 | – | 911940 1212 | 911430 1214 |
| EV 60 | 949052 | 949087 | 949080 | 94976 | 949077 |
| | 911430 1112 | 911940 1214 | 911940 1219 | 911940 1212 | 911430 1214 |
| EV 80 | 949401 | 949226 | 949240 | 94958 | 94940 |
| | 911430 1114 | 911940 1414 | 911940 1419 | 911940 1214 | 911940 1414 |

Code No. Motor adaptor:
**949226**

Code No. Coupling with specification of shaft diameter
1st end = 14 mm
2nd end = 14 mm:
**911940 1414**

**Note:**
For further details on motor versions, please refer to the chapter "Motors and controls"

For dimensions and order data for motor adaptor and coupling, please refer to next page

## Motor adaptor

- Simple assembly
- Exact fit due to centering shoulders

**Material:** Aluminium, black anodised

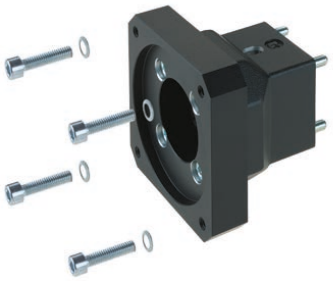

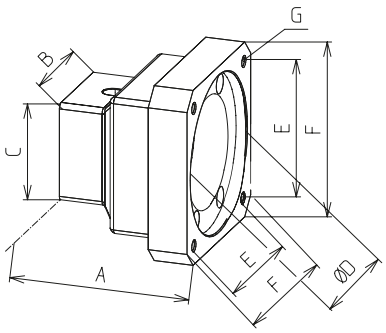


[mm]

| Code No. | Type | A | B | C | D | E | F | G |
|---|---|---|---|---|---|---|---|---|
| 949204 | 30 | 63 | 40 | 40 | 60 | 53 | 70 | M5 |
| 949402 | 30 | 65 | 40 | 40 | 73 | 70 | 90 | M6 |
| 949603 | 30 | 65 | 40 | 40 | 50 | 46 | 80 | M5 |
| 949205 | 40 | 65 | 50 | 50 | 60 | 53 | 70 | M5 |
| 949280 | 40 | 73 | 50 | 50 | 80 | 70,7 | 90 | M6 |
| 949403 | 40 | 73 | 50 | 50 | 73 | 70 | 90 | M6 |
| 94937 | 40 | 73 | 50 | 50 | 50 | 46 | 80 | M5 |
| 94916 | 40 | 73 | 50 | 50 | 80 | 100 | Ø120 | Ø6,6 |
| 949206 | 50 | 66 | 52 | 52 | 60 | 53 | 70 | M5 |
| 949225 | 50 | 73 | 52 | 52 | 80 | 70,7 | 90 | M6 |
| 949330 | 50 | 73 | 52 | 52 | 73 | 70 | 90 | M6 |
| 949605 | 50 | 73 | 52 | 52 | 50 | 65 | 80 | M5 |
| 94935 | 50 | 73 | 52 | 52 | 80 | 100 | Ø120 | Ø6,6 |
| 949052 | 60 | 66 | 60 | 60 | 60 | 53 | 70 | M5 |
| 949087 | 60 | 81 | 60 | 60 | 80 | 70,7 | 90 | M6 |
| 949080 | 60 | 91 | 60 | 60 | 95 | 81,3 | 115 | M8 |
| 949078 | 60 | 75 | 60 | 60 | 73 | 70 | 90 | M6 |
| 94976 | 60 | 85 | 60 | 60 | 50 | 65 | 80 | M5 |
| 949077 | 60 | 75 | 60 | 60 | 80 | 100 | Ø120 | Ø6,6 |
| 949401 | 80 | 74 | 80 | 80 | 60 | 53 | 70 | M5 |
| 949226 | 80 | 86 | 80 | 80 | 80 | 70,7 | 90 | M6 |
| 949240 | 80 | 96 | 80 | 80 | 95 | 81,3 | 115 | M8 |
| 949326 | 80 | 86 | 80 | 80 | 73 | 70 | 90 | M6 |
| 94958 | 80 | 86 | 80 | 80 | 50 | 46 | 80 | M5 |
| 94940 | 80 | 86 | 80 | 80 | 80 | 100 | Ø120 | Ø6,6 |

## Coupling

- Small size
- Shaft connection without backlash
- Maintenance-free
- Easy plug-in assembly

**Material:** Hub – aluminium
Spider ring – polyurethane

To ensure the smooth running of the coupling, a clearance of **D + 3 mm** is required.



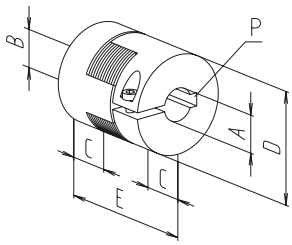


[mm]

| Code No. | A | B | C | D | E | P | Torque [Nm] | |
|---|---|---|---|---|---|---|---|---|
| | | | | | | | with feather key | without feather key |
| 9109200808 | 8 | 8 | 10 | 20 | 30 | 2x2 / 2x2 | 5 | 3 |
| 9109200895 | 8 | 9,5 | 10 | 20 | 30 | 2x2 / – | 5 | 3 |
| 9109200810 | 8 | 10 | 10 | 20 | 30 | 2x2 / 3x3 | 5 | 3 |
| 9109200812 | 8 | 12 | 10 | 22 | 30 | 2x2 / 4x4 | 5 | 3 |
| 9114300811 | 8 | 11 | 11 | 30 | 35 | 2x2 / 4x4 | 12 | 6 |
| 9114309510 | 9,5 | 10 | 11 | 30 | 35 | – / 3x3 | 12 | 6 |
| 9114309512 | 9,5 | 12 | 11 | 30 | 35 | – / 4x4 | 12 | 6 |
| 9114301010 | 10 | 10 | 11 | 30 | 35 | 3x3 / 3x3 | 12 | 6 |
| 9114301011 | 10 | 11 | 11 | 30 | 35 | 3x3 / 4x4 | 12 | 6 |
| 9114301012 | 10 | 12 | 11 | 30 | 35 | 3x3 / 4x4 | 12 | 6 |
| 9114301014 | 10 | 14 | 11 | 30 | 35 | 3x3 / 5x5 | 12 | 6 |
| 9114301112 | 11 | 12 | 11 | 30 | 35 | 4x4/ 4x4 | 12 | 6 |
| 9114301114 | 11 | 14 | 11 | 30 | 35 | 4x4/ 5x5 | 12 | 6 |
| 9114301212 | 12 | 12 | 11 | 30 | 35 | 4x4 / 4x4 | 12 | 6 |
| 9114301214 | 12 | 14 | 11 | 30 | 35 | 4x4 / 5x5 | 12 | 6 |
| 9114301219 | 12 | 19 | 11 | 30 | 35 | 4x4 / 6x6 | 12 | 6 |
| 9119409514 | 9,5 | 14 | 25 | 40 | 65 | – / 5x5 | 17 | 10 |
| 9119401212 | 12 | 12 | 25 | 40 | 65 | 4x4 / 4x4 | 17 | 10 |
| 9119401214 | 12 | 14 | 25 | 40 | 65 | 4x4 / 5x5 | 17 | 10 |
| 9119401414 | 14 | 14 | 25 | 40 | 65 | 5x5 / 5x5 | 17 | 10 |
| 9119401419 | 14 | 19 | 25 | 40 | 65 | 5x5 / 6x6 | 17 | 10 |

# quad® EV – Position determination

## Scale

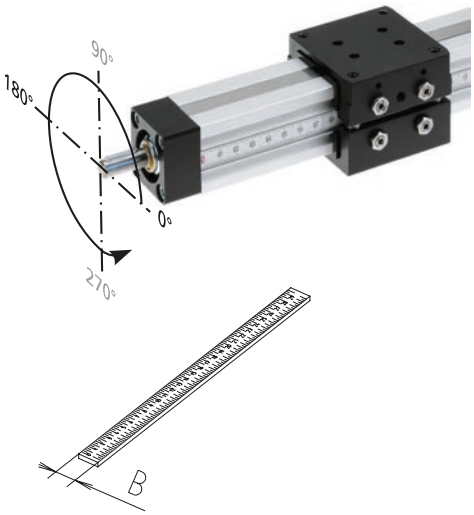


Image shows scale - to be read from left to right. Standard installation at 0° (90° and 270° not technically possible)

- Self-adhesive
- Can be retrofitted
- 4 mm font size

**Material:** Steel band, plastic-coated

[mm]

| Code No. | Type | Can be read from | Length | B | Version |
|---|---|---|---|---|---|
| 92005 | 30 | left to right | 0-1000 | 8 | fitted |
| 92015 | | left to right | 0-1000 | 8 | not fitted |
| 92001 | 40-80 | right to left | 0-1000 | 10 | fitted |
| 92021 | | right to left | 0-1000 | 10 | not fitted |
| 92011 | | left to right | 0-1000 | 10 | fitted |
| 92031 | | left to right | 0-1000 | 10 | not fitted |
| 92003 | | left to right | 0-2000 | 10 | fitted |
| 92013 | | left to right | 0-2000 | 10 | not fitted |
| 92023 | | right to left | 0-2000 | 10 | fitted |
| 92033 | | right to left | 0-2000 | 10 | not fitted |

## Positioning indicator



Installation position: horizontal



Installation position: vertical

* Version with double lead e.g. for installation on righthand/lefthand thread screws

- Permitted ambient temperature +80°C
- Figure height 6 mm
- Reading accuracy ± 0.1 mm
- Simple assembly

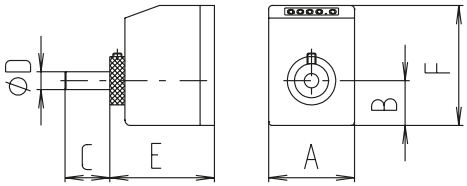


**Material:** Housing made of polyamide 6,
Orange RAL 2004
Steel parts galvanised

**Scope of delivery:** Positioning indicator, clamping ring, shaft extension and fastenings

**Note:** "rising" and "falling" versions refer to the clockwise rotation of the drive shaft.

[mm]

| Type | Installation position | Code No. | Version | Code No. | Version* | A | B | C | D | E | F |
|---|---|---|---|---|---|---|---|---|---|---|---|
| 30 | Horizontal | 91003 | 3 mm rising | 91086 | 6 mm rising | 48 | 25 | 25 | 8 | 59 | 67 |
| 30 | Horizontal | 91013 | 3 mm falling | 91087 | 6 mm falling | 48 | 25 | 25 | 8 | 59 | 67 |
| 30 | Vertical | 91023 | 3 mm rising | 91088 | 6 mm rising | 48 | 25 | 25 | 8 | 59 | 67 |
| 30 | Vertical | 91033 | 3 mm falling | 91089 | 6 mm falling | 48 | 25 | 25 | 8 | 59 | 67 |
| 40 | Horizontal | 91054 | 4 mm rising | 91069 | 8 mm rising | 48 | 25 | 28 | 10 | 59 | 67 |
| 40 | Horizontal | 91064 | 4 mm falling | 91066 | 8 mm falling | 48 | 25 | 28 | 10 | 59 | 67 |
| 40 | Vertical | 91044 | 4 mm rising | 91067 | 8 mm rising | 48 | 25 | 28 | 10 | 59 | 67 |
| 40 | Vertical | 91074 | 4 mm falling | 91068 | 8 mm falling | 48 | 25 | 28 | 10 | 59 | 67 |
| 50/60 | Horizontal | 91005 | 4 mm rising | 91076 | 8 mm rising | 48 | 25 | 38 | 12 | 59 | 67 |
| 50/60 | Horizontal | 91015 | 4 mm falling | 91077 | 8 mm falling | 48 | 25 | 38 | 12 | 59 | 67 |
| 50/60 | Vertical | 91025 | 4 mm rising | 91078 | 8 mm rising | 48 | 25 | 38 | 12 | 59 | 67 |
| 50/60 | Vertical | 91035 | 4 mm falling | 91079 | 8 mm falling | 48 | 25 | 38 | 12 | 59 | 67 |
| 80 | Horizontal | 91008 | 5 mm rising | 91082 | 10 mm rising | 48 | 25 | 38 | 14 | 59 | 67 |
| 80 | Horizontal | 91018 | 5 mm falling | 91083 | 10 mm falling | 48 | 25 | 38 | 14 | 59 | 67 |
| 80 | Vertical | 91028 | 5 mm rising | 91084 | 10 mm rising | 48 | 25 | 38 | 14 | 59 | 67 |
| 80 | Vertical | 91038 | 5 mm falling | 91085 | 10 mm falling | 48 | 25 | 38 | 14 | 59 | 67 |

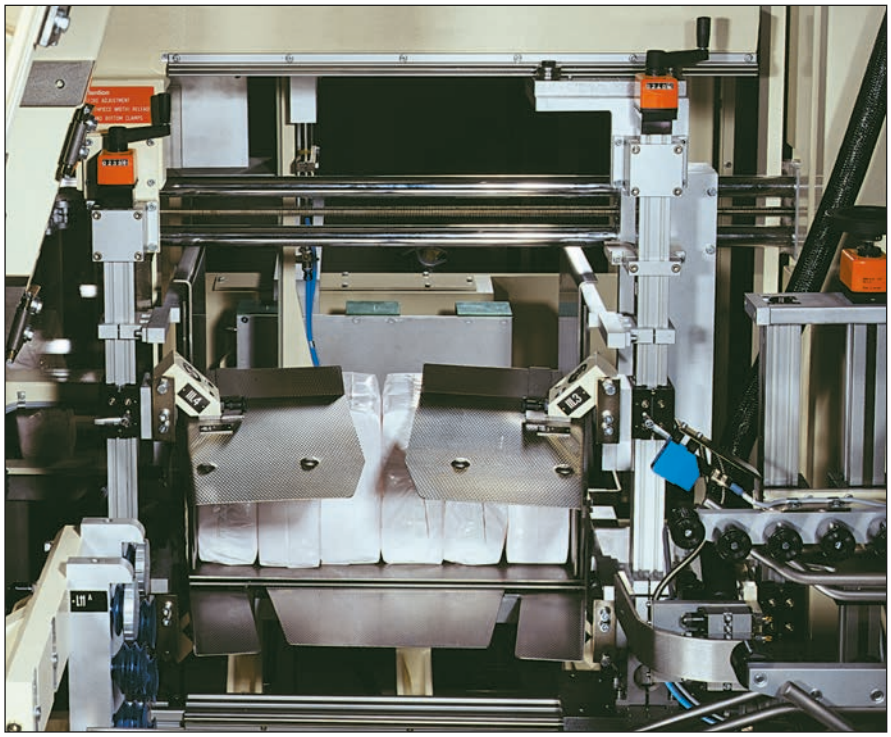

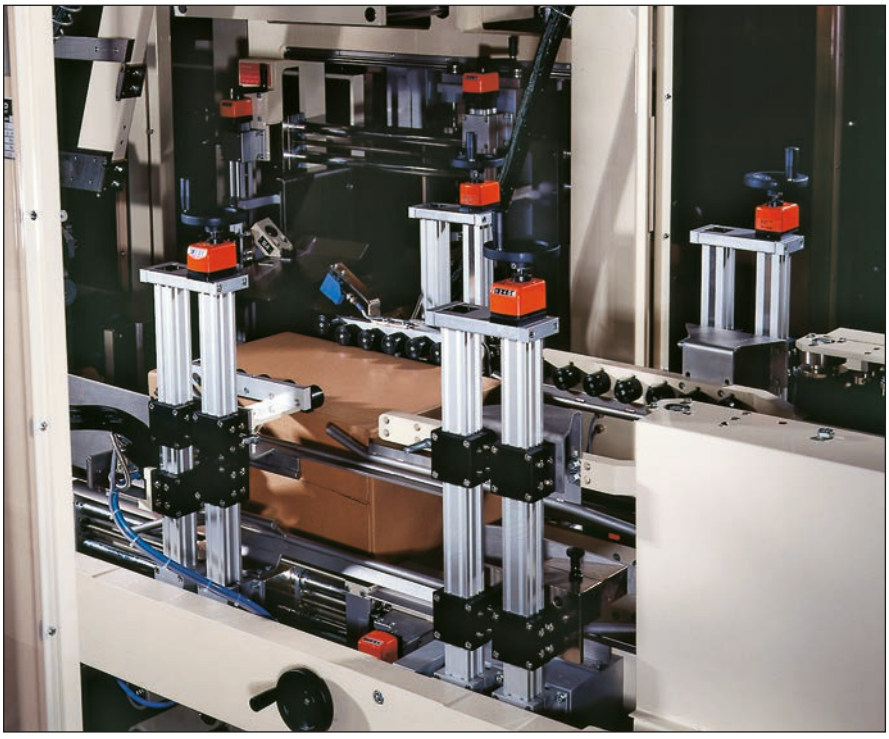

EV units enable simple format adjustment of a packaging machine

## Mechanical limit switch

- Limit switch with angle lever
- Compact design

**Material:** Thermoplastic, fully insulated



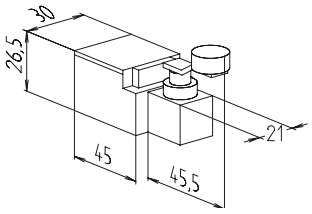


| | |
|---|---|
| Max. voltage | 250 V AC |
| Max. switching current | 6 A |
| Max. starting current | 16 A |
| Operating frequency | Max. 6000/h |
| Mechanical lifetime | 1 x 107 switching cycles |
| Axis lever adjustment | locking by 360° |
| Protection class | IP 65 |
| Ambient temperature | -30°C to +80°C |

| Code No. | Type | Switching function |
|---|---|---|
| 91905 | 30-80 | NC/NO |

## Inductive limit switch

- Maintenance-free

**Material:** Housing - brass, chrome-plated



| Type | 30/40 | 50/80 |
|---|---|---|
| Voltage | 10 - 30 V DC | |
| Max. switching current | 150 mA | 200 mA |
| Operating distance | 2 mm for steel | 4 mm for steel |
| Protection class | IP 67 | |
| Ambient temperature | -25°C to +70°C | |
| Cable lengths | 2m | |

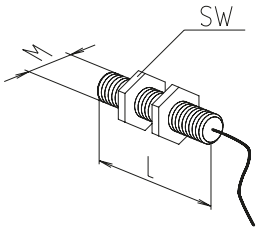


[mm]

| Code No. | Type | Switching function | L | M | Wrench size (SW) |
|---|---|---|---|---|---|
| 92826 | 30/40 | Changeover | 40 | 8x1 | 13 |
| 92825 | 50/80 | Changeover | 50 | 12x1 | 17 |

## Holder for limit switch mechanical and inductive

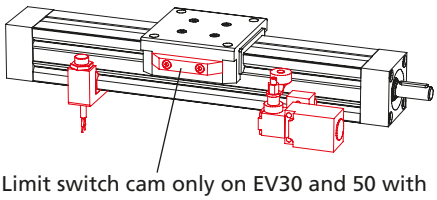

Limit switch cam only on EV30 and 50 with closed carriage

- Can be moved in the V-slots of the guide profile and fixed using a set screw
- Using a limit switch reduces the stroke by 25 mm (open elements) or 50 mm (closed elements)
- The limit switch holder cannot be used in conjunction with closed carriages. This version is available on request.

**Material:** AlMgSi, clear anodised

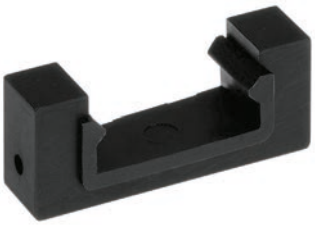

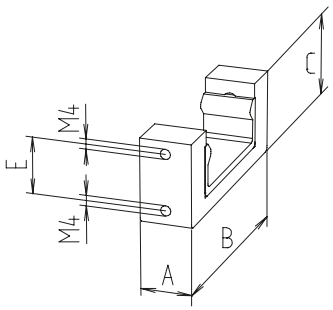


for limit switch

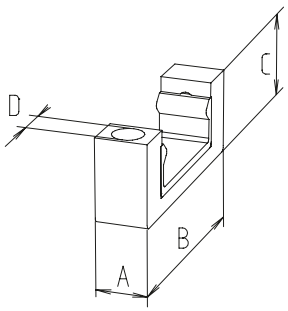


for limit switch

[mm]

| Code No. | Type | A | B | C | D | E |
|---|---|---|---|---|---|---|
| **Holder for mechanical limit switch** | | | | | | |
| 92703 | 30* | 16 | 56 | 20 | – | 22 |
| 92704 | 40* | 16 | 76 | 26.5 | – | 22 |
| 92705 | 50 | 20 | 85 | 33 | – | 22 |
| 92736 | 60 | 26 | 105 | 40 | M12 x 1 | 22 |
| 92708 | 80 | 26 | 126 | 53 | M12 x 1 | 22 |
| 92713 | 30 | Holder with limit switch | | | | |
| 92793 | 30 | Holder with limit switch, closed carriage** | | | | |
| 92714 | 40 | Holder with limit switch | | | | |
| 92715 | 50 | Holder with limit switch | | | | |
| 92795 | 50 | Holder with limit switch, closed carriage** | | | | |
| 92746 | 60 | Holder with limit switch | | | | |
| 92718 | 80 | Holder with limit switch | | | | |
| **Holder for inductive limit switch** | | | | | | |
| 92903 | 30 | 16 | 56 | 20 | M8 x 1 | – |
| 92904 | 40 | 16 | 68 | 26.5 | M8 x 1 | – |
| 92905 | 50 | 20 | 85 | 33 | M12 x 1 | – |
| 92736 | 60 | 26 | 105 | 40 | M12 x 1 | 22 |
| 92908 | 80 | 26 | 126 | 53 | M12 x 1 | 22 |
| 92913 | 30 | Holder with limit switch changeover | | | | |
| 92924 | 40 | Holder with limit switch changeover | | | | |
| 92915 | 50 | Holder with limit switch changeover | | | | |
| 92956 | 60 | Holder with limit switch changeover | | | | |
| 92918 | 80 | Holder with limit switch changeover | | | | |

* with flange plate
** limit switch cam included in delivery

# Profile guide/actuator - PL/PLS II

**Motor-driven or manual adjustment of medium to heavy loads – easy for the PLS profile linear unit**

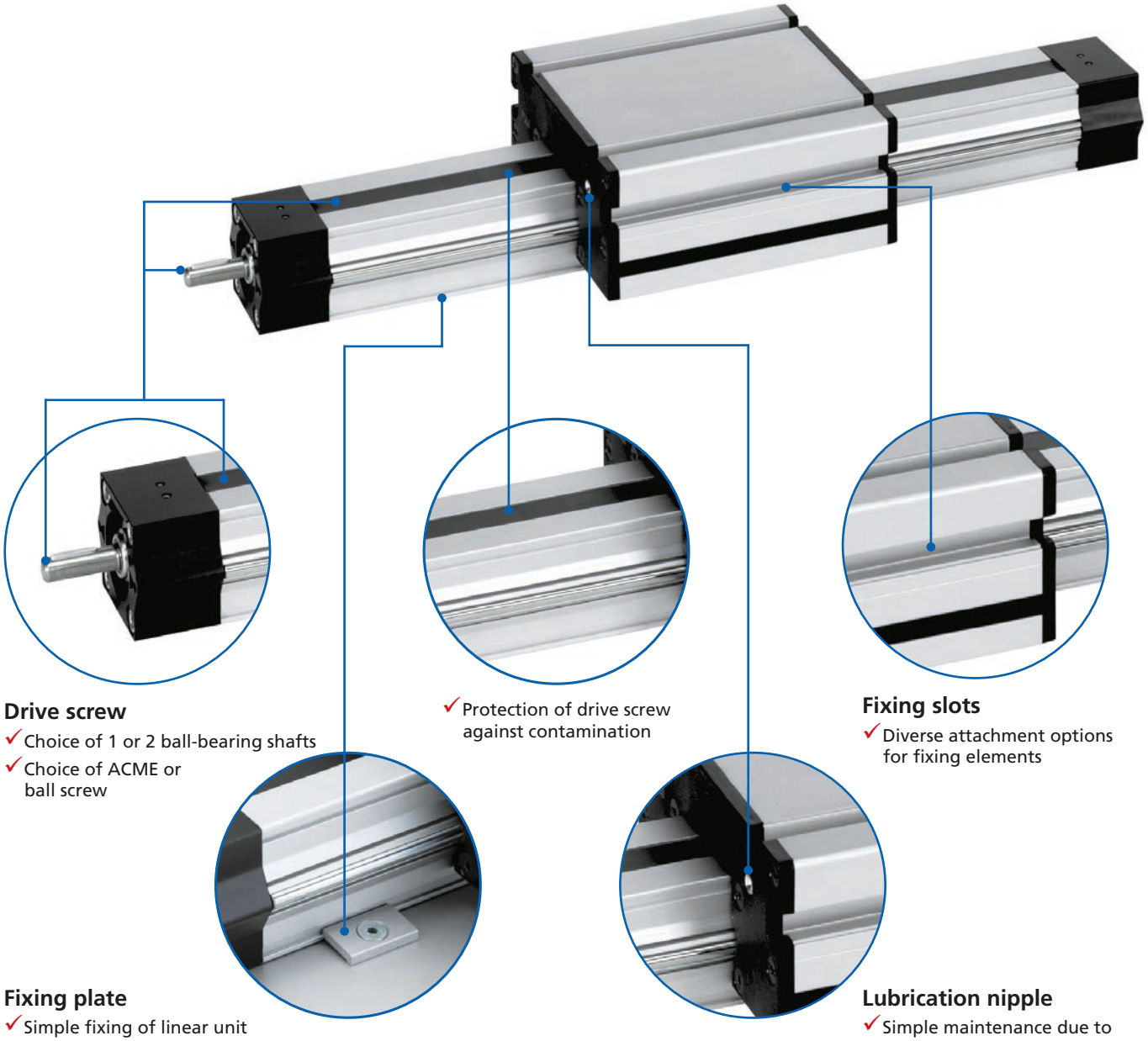

**Drive screw**
- ✓ Choice of 1 or 2 ball-bearing shafts
- ✓ Choice of ACME or ball screw

✓ Protection of drive screw against contamination

**Fixing slots**
- ✓ Diverse attachment options for fixing elements

**Fixing plate**
- ✓ Simple fixing of linear unit on substructures

**Lubrication nipple**
- ✓ Simple maintenance due to central lubrication of lead nut and guide shafts

## Features:

- Choice of ACME screw or ball screw drive
- Cover strip protects screw against contamination
- Adjustable roller guide
- External lubrication

## Options:

- Longer stroke lengths
- Second free-running carriage
- Extended carriage

# PL/PLS II - Table of contents


## Properties/Technical data

- General information/operating conditions ... 236
- Load data ... 237

## Versions
(Dimensions, order numbers)

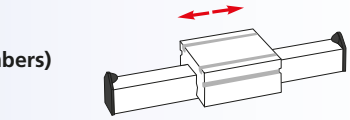

- Guide ... 238 - 239

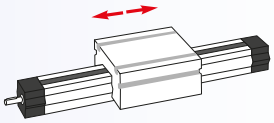

- Right *or* lefthand thread ... 240 - 241

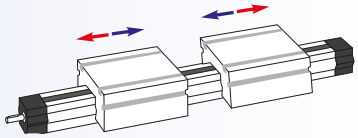

- Right *and* lefthand thread ... 242 - 243

## Accessories

**Fixing**

- Fixing plate ... 244
- Fixing element ... 244
- Slot stone -N- ... 245

**Drive**

- Handwheel ... 245
- Motor adaptor/coupling ... 246 - 247
- Angular gear ... 248 - 249

**Position determination**

- Positioning indicator ... 250
- Limit switch ... 251 - 252

# PL/PLS II – Technical data

## General information/operating conditions

| | |
|---|---|
| Design | Profile linear unit with extruded carriage/guide profile |
| Guide | Adjustable roller guide |
| Installation position | Any position |
| Lead accuracy | ± 0.1 mm/300 mm travel |
| Self-locking | Yes, for threaded screw, no, for ball screw drive |
| Duty cycle | ACME: S3 30% Basic 1h / Ball screw: S3 100% |
| Ambient temperature | 0°C to +60°C |

## Screw lead

[mm]

| ACME screw | |
|---|---|
| Type | Screw lead |
| PLS 30 | 3 |
| PLS 40 | 4 |
| PLS 50 | 4 |
| PLS 60 | 4 |
| PLS 80 | 5 |

[mm]

| Ball screw drive | |
|---|---|
| Type | Screw lead |
| PLS 30 | 3 |
| PLS 40 | 4 |
| PLS 50 | 5 |
| PLS 60 | 5 |
| PLS 80 | 5 |
| PLS 80 | 10 |

$$\text{Required screw speed n [rpm]} = \frac{\text{speed [m/min] x 1000}}{\text{screw lead [mm]}}$$

## Critical screw speed

ACME screw

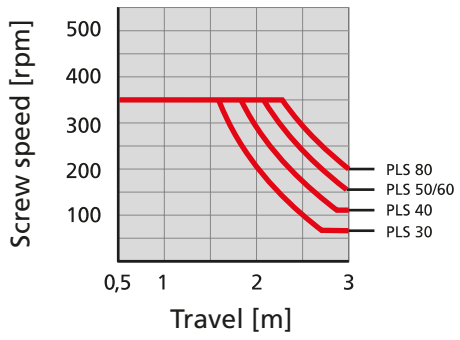


Ball screw drive

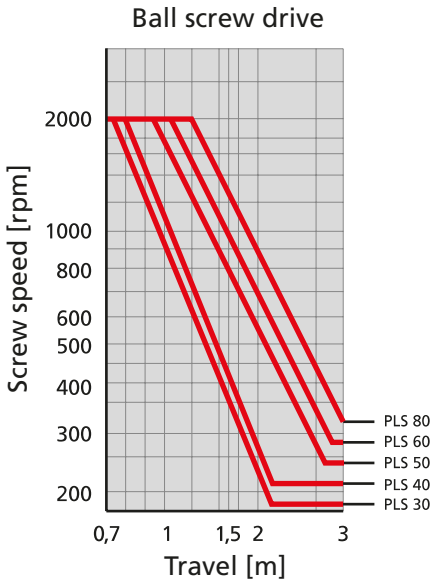


## No-load torque

[Nm]

| Type | ACME screw | Ball screw drive |
|---|---|---|
| PLS 30 | 0.10 | 0.10 |
| PLS 40 | 0.20 | 0.15 |
| PLS 50 | 0.25 | 0.20 |
| PLS 60 | 0.30 | 0.25 |
| PLS 80 | 0.40 | 0.35 |

## Load data*

F Force [N]

M Moment [Nm]

I Geometric moment of inertia [$cm^4$]

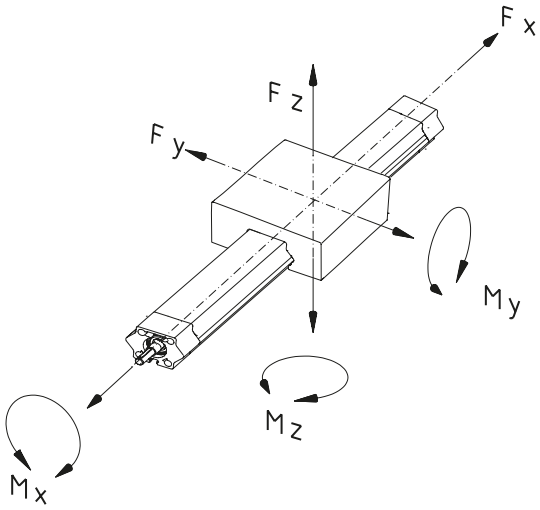


* With reference to carriage (static values, guide element resting on full surface)

| Type | Fx | Fy | Fz | Mx | My | Mz |
|---|---|---|---|---|---|---|
| PLS 30 | 340 | 790 | 790 | 14 | 20 | 22 |
| PLS 40 | 1675 | 1020 | 1020 | 23 | 33 | 33 |
| PLS 50 | 1900 | 1020 | 1020 | 28 | 49 | 49 |
| PLS 60 | 2400 | 2550 | 2550 | 99 | 143 | 143 |
| PLS 80 | 3050 | 2550 | 2550 | 124 | 168 | 169 |

## Geometric moment of inertia

[$cm^4$]

| Type | Iy | Iz |
|---|---|---|
| PLS 30 | 4.30 | 6.36 |
| PLS 40 | 14.36 | 19.85 |
| PLS 50 | 35.45 | 44.27 |
| PLS 60 | 77.28 | 111.53 |
| PLS 80 | 201.86 | 280.73 |

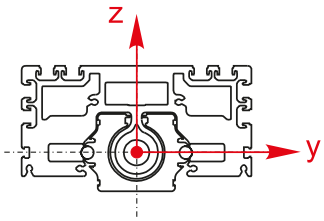

# PL - Versions

**Order information:**

- Longer travel lengths on request
- Second or extended carriage available on request

**Version** ■ **Guide**

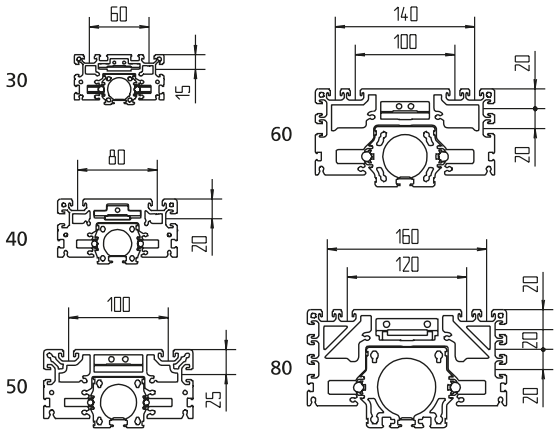




| Code No. | Type | Basic length | B | C | F | H | J | K |
|---|---|---|---|---|---|---|---|---|
| MMA3030AA | PL-II 30 | 142 | 90 | 50 | 4.5 | 50 | 102 | 34 |
| MMA4040AA | PL-II 40 | 172 | 120 | 65 | 6.5 | 63 | 132 | 44 |
| MMA5050AA | PL-II 50 | 202 | 150 | 78 | 9.0 | 74 | 162 | 54 |
| MMA6060AA | PL-II 60 | 232 | 180 | 98 | 11.5 | 84 | 192 | 72 |
| MMA8080AA | PL-II 80 | 252 | 200 | 118 | 21.5 | 104 | 212 | 92 |

_ _ _ _ Total length = basic length + travel [mm]

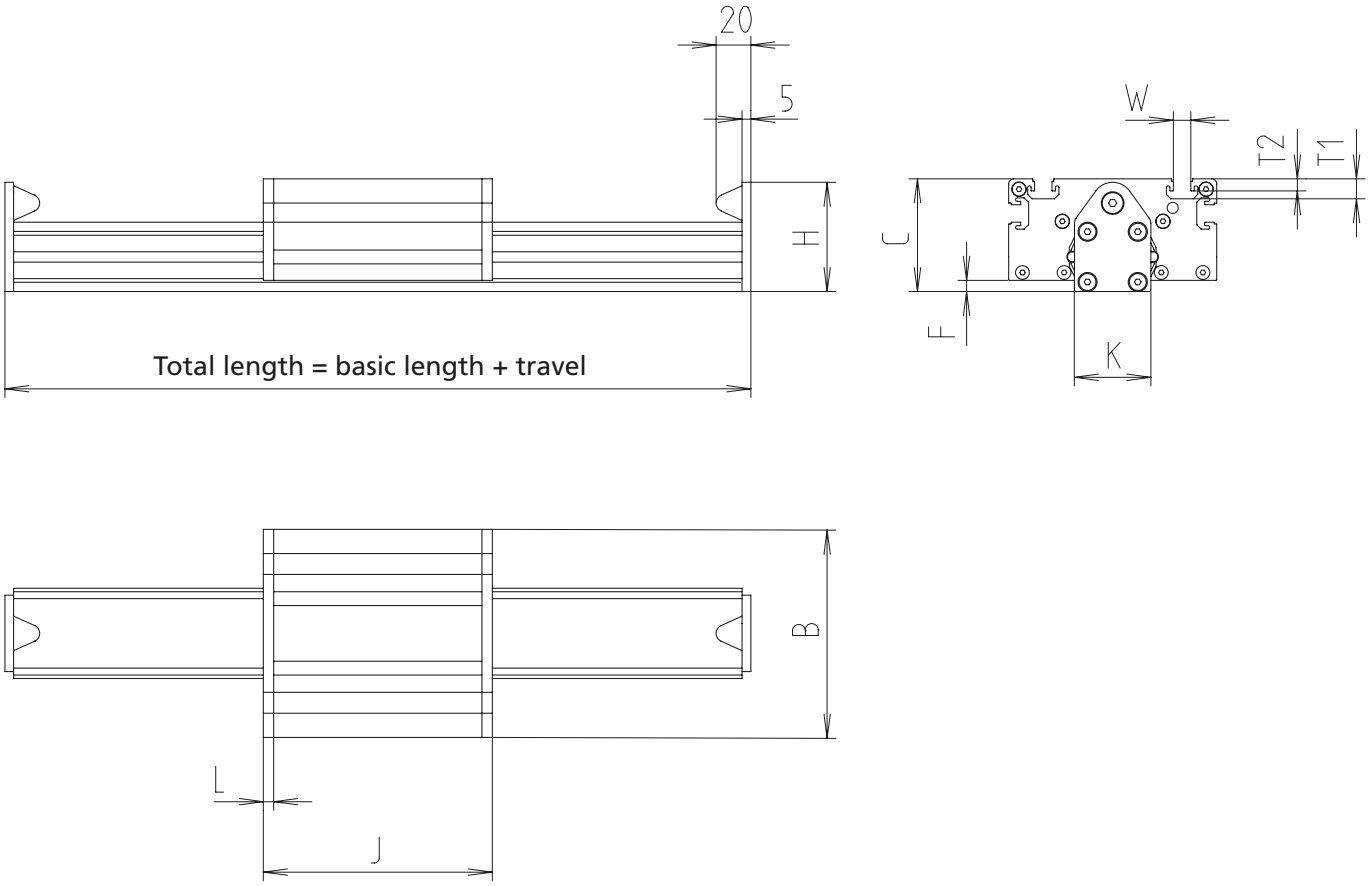


[mm]

| L | T1 | T2 | W | Max. travel | Mass [kg] | |
|---|---|---|---|---|---|---|
| | | | | | Basic length | per 100 mm travel |
| 6 | 8.5 | 4.5 | 10.1 | 5860 | 1.0 | 0.16 |
| 6 | 11.5 | 7 | 10.1 | 5830 | 1.9 | 0.28 |
| 6 | 11.5 | 7 | 10.1 | 5800 | 3.5 | 0.41 |
| 6 | 11.5 | 7 | 10.1 | 5770 | 5.9 | 0.60 |
| 6 | 11.5 | 7 | 10.1 | 5750 | 7.9 | 0.90 |

# PLS - Versions

**Order information:**

- Longer travel lengths on request
- Second free-running carriage available on request
- Extended carriage available on request

**Version** ■ **Right *or* lefthand thread**

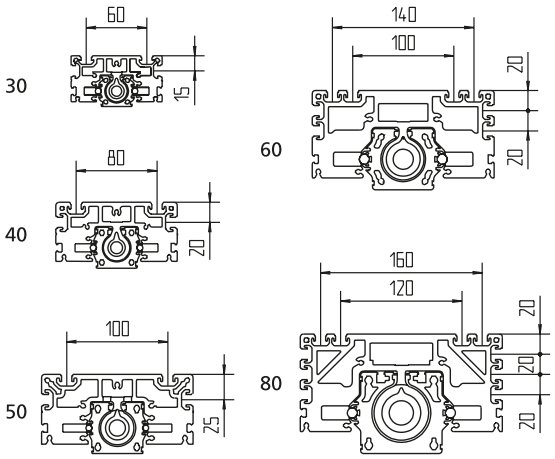




| Code No. | Type | Spindle | Basic length | B | C | D1 | D2 | F | G | H | J |
|---|---|---|---|---|---|---|---|---|---|---|---|
| **PLS with ACME screw** | | | | | | | | | | | |
| FX _ 3030 _ A | PLS 30 | 12 x 3 | 162 | 90 | 50 | $22^{J6}$ | 6 | 4.5 | M5 | 15 | 102 |
| FX _ 4040 _ A | PLS 40 | 16 x 4 | 204 | 120 | 65 | $30^{J6}$ | 8 | 6.5 | M5 | 20 | 132 |
| FX _ 5050 _ A | PLS 50 | 20 x 4 | 238 | 150 | 78 | $35^{J6}$ | 10 | 9 | M5 | 25 | 162 |
| FX _ 6060 _ A | PLS 60 | 20 x 4 | 276 | 180 | 98 | $35^{J6}$ | 12 | 11.5 | M5 | 30 | 192 |
| FX _ 8080 _ A | PLS 80 | 24 x 5 | 308 | 200 | 118 | $50^{H7}$ | 14 | 21.5 | M5 | 40 | 212 |
| **PLS with ball screw drive** | | | | | | | | | | | |
| FY A 3030 _ A | PLS 30 | 10 x 3 | 162 | 90 | 50 | $22^{J6}$ | 6 | 4.5 | M5 | 15 | 102 |
| FY A 4040 _ A | PLS 40 | 12 x 4 | 204 | 120 | 65 | $30^{J6}$ | 8 | 6.5 | M5 | 20 | 132 |
| FY A 5050 _ A | PLS 50 | 16 x 5 | 238 | 150 | 78 | $35^{J6}$ | 10 | 9 | M5 | 25 | 162 |
| FY A 6060 _ A | PLS 60 | 20 x 5 | 276 | 180 | 98 | $35^{J6}$ | 12 | 11.5 | M5 | 30 | 192 |
| FY A 8080 _ H | PLS 80 | 25 x 5 | 308 | 200 | 118 | $50^{H7}$ | 14 | 21.5 | M5 | 40 | 212 |
| FY A 8080 _ A | PLS 80 | 25 x 10 | 308 | 200 | 118 | $50^{H7}$ | 14 | 21.5 | M5 | 40 | 212 |

_ _ _ _ Total length = basic length + travel [mm]

**Drive shafts:**
T = 1 drive shaft
U = 2 drive shafts

**Version:**
A = righthand thread
H = lefthand thread

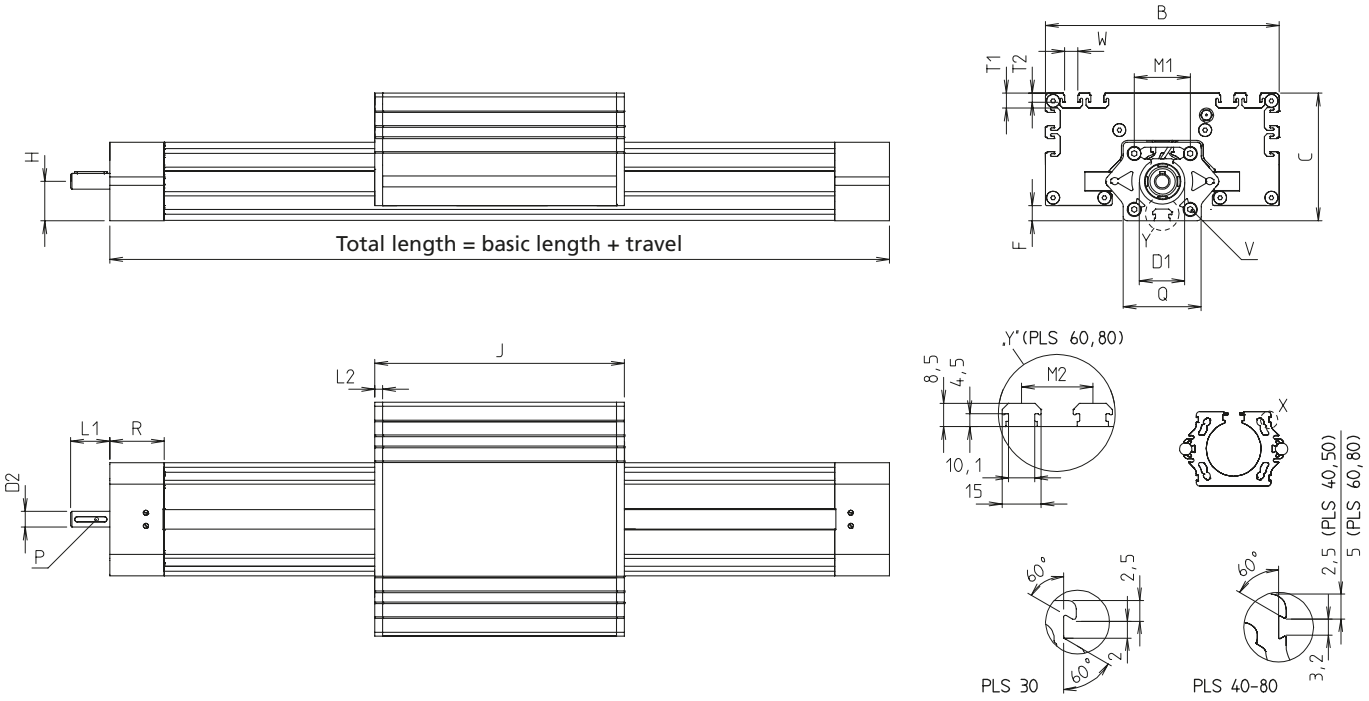


[mm]

| L1 | L2 | M1 | M2 | P | Q | R | T1 | T2 | V | W | Max. travel | Mass [kg] | |
|---|---|---|---|---|---|---|---|---|---|---|---|---|---|
| | | | | | | | | | | | | Basic length | per 100 mm travel |
| 25 | 6 | 21 | – | 2 x 2 x 20 | 30 | 30 | 8.5 | 4.5 | M4 | 10.1 | 830 | 1.12 | 0.27 |
| 28 | 6 | 29 | – | 2 x 2 x 20 | 40 | 36 | 11.5 | 7 | M5 | 10.1 | 2800 | 2.20 | 0.44 |
| 30 | 6 | 38 | – | 3 x 3 x 20 | 50 | 37 | 11.5 | 7 | M6 | 10.1 | 3000 | 4.51 | 0.64 |
| 30 | 6 | 43 | 0 | 4 x 4 x 25 | 60 | 42 | 11.5 | 7 | M6 | 10.1 | 2964 | 6.34 | 0.95 |
| 38 | 6 | 64 | 20 | 5 x 5 x 32 | 80 | 48 | 11.5 | 7 | M6 | 10.1 | 2916 | 9.91 | 1.25 |
| | | | | | | | | | | | | | |
| 25 | 6 | 21 | – | 2 x 2 x 20 | 30 | 30 | 8.5 | 4.5 | M4 | 10.1 | 830 | 1.09 | 0.26 |
| 28 | 6 | 29 | – | 2 x 2 x 20 | 40 | 36 | 11.5 | 7 | M5 | 10.1 | 1840 | 2.12 | 0.40 |
| 30 | 6 | 38 | – | 3 x 3 x 20 | 50 | 37 | 11.5 | 7 | M6 | 10.1 | 1702 | 4.50 | 0.60 |
| 30 | 6 | 43 | 0 | 4 x 4 x 25 | 60 | 42 | 11.5 | 7 | M6 | 10.1 | 2664 | 6.18 | 0.90 |
| 38 | 6 | 64 | 20 | 5 x 5 x 32 | 80 | 48 | 11.5 | 7 | M6 | 10.1 | 2664 | 9.59 | 1.19 |
| 38 | 6 | 64 | 20 | 5 x 5 x 32 | 80 | 48 | 11.5 | 7 | M8 | 10.1 | 2664 | 9.59 | 1.19 |

# PLS - Versions

**Order information:**

- Please specify total travel when placing an order
- Longer travel lengths on request
- Extended carriage available on request

**Version** ■ **Right *and* lefthand thread**

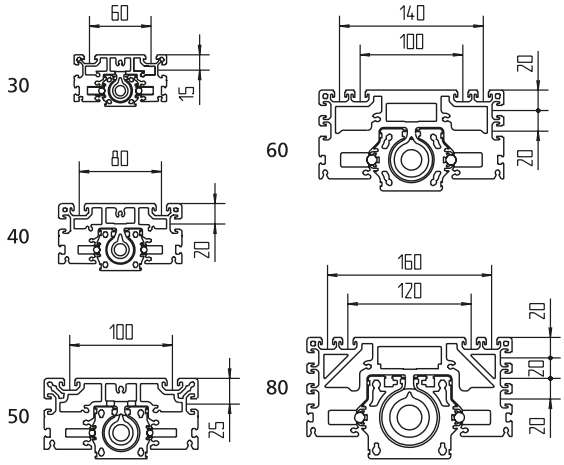


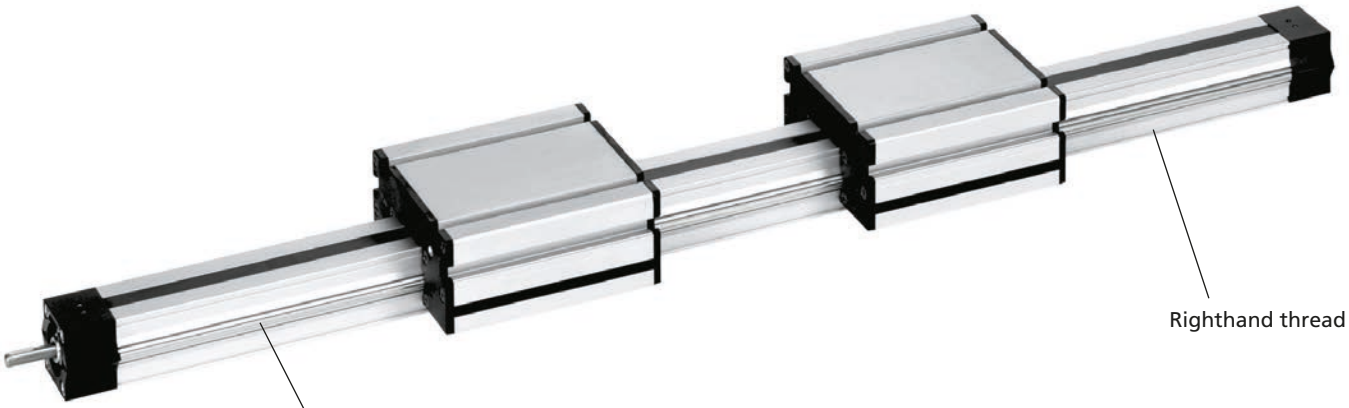


| Code No. | Type | Spindle | Basic length | B | C | D1 | D2 | F | G | H | J |
|---|---|---|---|---|---|---|---|---|---|---|---|
| **PLS with ACME screw** | | | | | | | | | | | |
| FXC 3030 _ A | PLS 30 | 12 x 3 | 264 | 90 | 50 | 22J6 | 6 | 4.5 | M5 | 15 | 102 |
| FXC 4040 _ A | PLS 40 | 16 x 4 | 336 | 120 | 65 | 30J6 | 8 | 6.5 | M5 | 20 | 132 |
| FXC 5050 _ A | PLS 50 | 20 x 4 | 400 | 150 | 78 | 35J6 | 10 | 9 | M5 | 25 | 162 |
| FXC 6060 _ A | PLS 60 | 20 x 4 | 468 | 180 | 98 | 35J6 | 12 | 11.5 | M5 | 30 | 192 |
| FXC 8080 _ A | PLS 80 | 24 x 5 | 520 | 200 | 118 | 50H7 | 14 | 21.5 | M5 | 40 | 212 |

_ _ _ _ Total length = basic length + travel [mm]

**Version:**
S = 1 drive shaft at lefthand thread end
T = 1 drive shaft at righthand thread end
U = 2 drive shafts

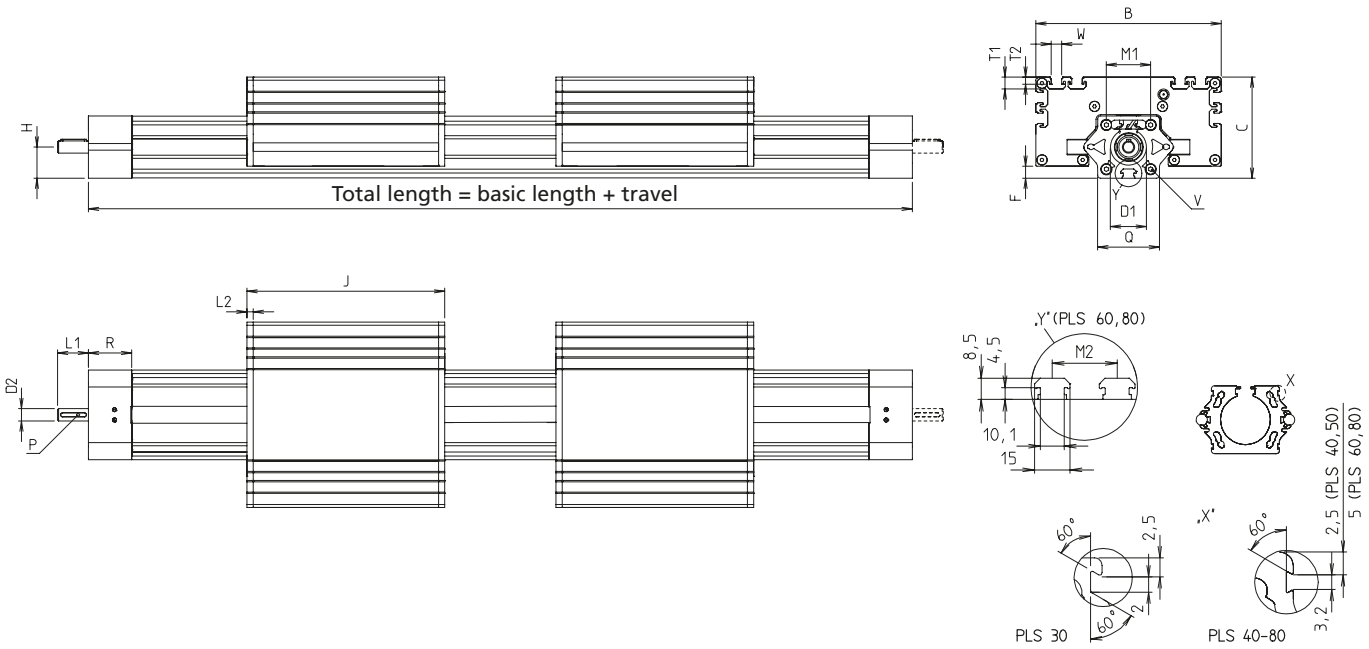


[mm]

| L1 | L2 | M1 | M2 | P | Q | R | T1 | T2 | V | W | Max. travel | Mass [kg] | |
|---|---|---|---|---|---|---|---|---|---|---|---|---|---|
| | | | | | | | | | | | | Basic length | per 100 mm travel |
| 25 | 6 | 21 | – | 2 x 2 x 20 | 30 | 30 | 8.5 | 4.5 | M4 | 10.1 | 728 | 1.95 | 0.27 |
| 28 | 6 | 29 | – | 2 x 2 x 20 | 40 | 36 | 11.5 | 7 | M5 | 10.1 | 2868 | 4.08 | 0.44 |
| 30 | 6 | 38 | – | 3 x 3 x 20 | 50 | 37 | 11.5 | 7 | M6 | 10.1 | 2838 | 7.75 | 0.64 |
| 30 | 6 | 43 | 0 | 4 x 4 x 25 | 60 | 42 | 11.5 | 7 | M6 | 10.1 | 2772 | 10.99 | 0.95 |
| 38 | 6 | 64 | 20 | 5 x 5 x 32 | 80 | 48 | 11.5 | 7 | M6 | 10.1 | 2704 | 16.66 | 1.25 |

# PLS – Fixing/Drive

**Order instruction fixing plate:**

- **Purchase only in lot sizes and a multiple of that, see product table below**

- Plate for fixing the linear unit to a substructure
- The fixing plates can also be retrofitted and moved axially

**Scope of delivery:** without screws

## Fixing plate

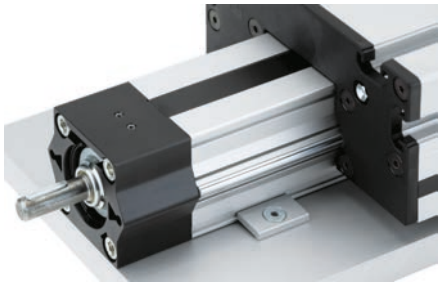

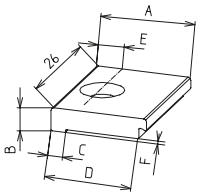


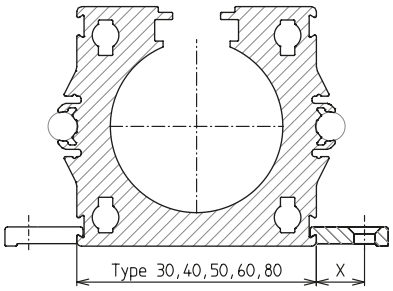


[mm]

| Code No. | Type | lot sizes | Version | A | B | C | D | E | F | X |
|---|---|---|---|---|---|---|---|---|---|---|
| 955101 | PL / PLS 30, 40, 50 | 10, 20, 30... pcs | Counterbore for M5 screw, DIN 79911 | 16,3 | 4 | 2,5 | 15 | 7 | 0,5 | 8 |
| 955111 | PL / PLS 60, 80 | 10, 20, 30... pcs | Counterbore for M6 screw, DIN 7984 | 23,8 | 7,5 | 3,5 | 22,5 | 12,5 | 1 | 10 |

## Fixing element

- Element for clamping the PLS to the guide profile or end element

**Material:** AlMgSi, clear, anodised
Steel parts galvanised



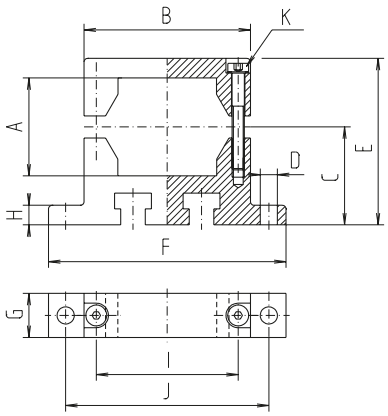


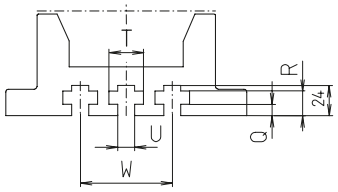


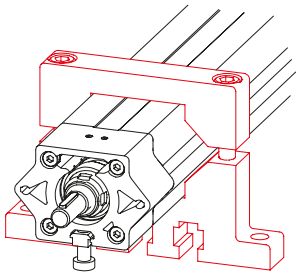

[mm]

| Code No. | Type | A | B | C | D | E | F | G | H | I | J | K | Q | R | T | U | W |
|---|---|---|---|---|---|---|---|---|---|---|---|---|---|---|---|---|---|
| 95503 | PLS 30 | 30 | 56 | 30 | 7 | 51 | 84 | 16 | 6 | 47 | 70 | M5 x 30 | 4.5 | 9 | 10 | 6 | 20 |
| 95504 | PLS 40 | 40 | 68 | 40 | 7 | 68 | 97 | 18 | 8 | 58 | 83 | M5 x 40 | 6.5 | 13 | 15 | 10 | 28 |
| 95505 | PLS 50 | 50 | 85 | 50 | 7 | 85 | 125 | 20 | 10 | 69 | 105 | M6 x 45 | 7 | 14 | 20 | 10 | 30 |
| 95506 | PLS 60 | 60 | 126 | 69.7 | 11 | 115.4 | 170 | 24 | 16 | 106 | 148 | M10 x 60 | 8 | 20 | 19 | 12 | 65 |
| 95508 | PLS 80 | 80 | 126 | 80 | 11 | 136 | 170 | 24 | 16 | 113 | 148 | M6 x 70 | 8 | 20 | 19 | 12 | 65 |

**Order instruction square nut:**

- **Purchase only in lot sizes and a multiple of that, see product table below**

- Slot stone for lateral insertion in the carriage
- For further slot stone versions, please refer to the catalogue BLOCAN® profile systems

**Material:** Steel, galvanised

## Slot stone -N-



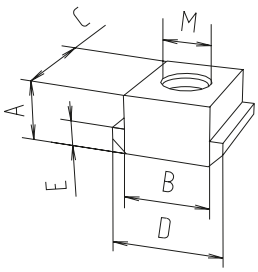


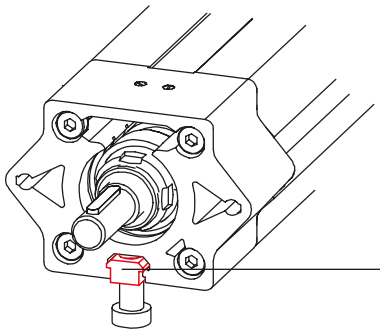

* **Note:** Please use flat slot stones 30 for fixing in the end elements (only available for sizes 60 and 80).

[mm]

| Code No. | Type | lot sizes | Version | A | B | C | D | E | M | F [N] |
|---|---|---|---|---|---|---|---|---|---|---|
| 4006201 | PLS 30 | 10, 20, 30... pcs | M5 | 5 | 10 | 13 | 13 | 3 | M5 | 4000 |
| 4006203 | PLS 30 | 10, 20, 30... pcs | M6 | 5 | 10 | 13 | 13 | 3 | M6 | 4000 |
| 4006202 | PLS 30 | 10, 20, 30... pcs | M8 | 5 | 10 | 13 | 13 | 3 | M8 | 4000 |
| 4026207 | PLS 40-80* | 10, 20, 30... pcs | M5 | 8 | 10 | 13 | 15 | 4 | M5 | 4000 |
| 4026203 | PLS 40-80* | 10, 20, 30... pcs | M6 | 8 | 10 | 13 | 15 | 4 | M6 | 9000 |
| 4026206 | PLS 40-80* | 10, 20, 30... pcs | M8 | 8 | 10 | 13 | 15 | 4 | M8 | 9000 |

## Handwheel

- Rotating cylindrical grip
- Fully turned wheel rim
- Hub machined

**Material:** Die-cast aluminium black powder-coating



Diam. 140-200



Diam. 60-100

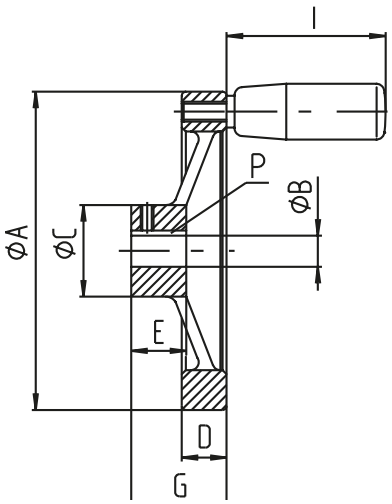


[mm]

| Code No. | Type | A | B | C | D | E | G | P | I |
|---|---|---|---|---|---|---|---|---|---|
| 90901 | 30 | 60 | 6 | 18 | 13 | 16 | 22 | 2 x 2 | 28 |
| 90903 | 40 | 80 | 8 | 23 | 11 | 17 | 35 | 2 x 2 | 42 |
| 90904 | 50 | 100 | 10 | 28 | 14 | 17 | 30 | 3 x 3 | 52 |
| 90905 | 60 | 140 | 12 | 36 | 16.5 | 19 | 36 | 4 x 4 | 66 |
| 90918 | 80 | 160 | 14 | 36 | 18 | 20 | 36 | 5 x 5 | 80 |
| 90928 | 80 | 200 | 14 | 43 | 20 | 24 | 44 | 5 x 5 | 80 |

## Motor adapter kit for RK AC servomotors

- Servomotors from the RK standard range can be easily connected
- Complete motor adapter kits manufactured to your specifications on request

**Scope of delivery:**
Motor adapter kit, elastomer coupling and fixation material

| Type | Servo motors without gearbox | |
|---|---|---|
| | RK-AC 240 | RK-AC 470 |
| Angular gear system 1 and 4 for PLS 30-80 | 949130 | 949131 |
| Angular gear system 2 and 3 for PLS 30-80 | 949139 | 949140 |

## Selection table Motor adaptor/coupling

| Type | Servo motors without gear | | | Three-phase motor | |
|---|---|---|---|---|---|
| | RK-AC 118 | RK-AC 240 | RK-AC 470 | 90/120W | 180/250 W |
| PLS 30 | 949207 | – | – | 94981 | – |
| | 911430 0611 | – | – | 910920 0612 | – |
| PLS 40 | 949208 | 949227 | – | 949100 | 949101 |
| | 911430 0811 | 911430 0814 | – | 911430 0812 | 911430 0814 |
| PLS 50 | 949209 | 949228 | – | 949605 | 94935 |
| | 911430 1011 | 911430 1014 | – | 911430 1012 | 911430 1014 |
| PLS 60 | 949210 | 949229 | 949241 | 949107 | 949108 |
| | 911430 1112 | 911940 1214 | 911940 1219 | 911940 1212 | 911430 1214 |
| PLS 80 | 949404 | 949230 | 949242 | 94958 | 94940 |
| | 911430 1114 | 911940 1414 | 911940 1419 | 911940 1214 | 911940 1414 |

**Note:** For further details on motor versions, please refer to the chapter **"Motors and controls"**

## Motor adaptor

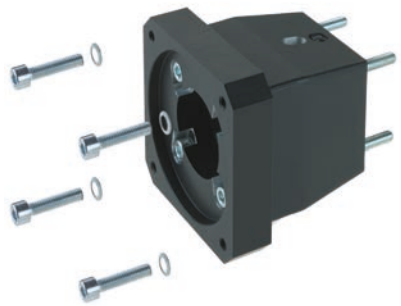

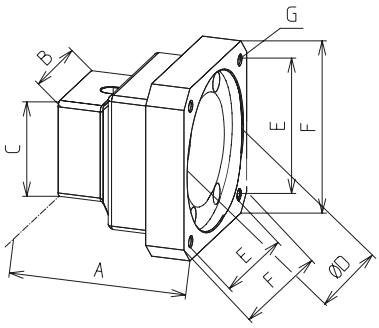


- Simple assembly on linear unit and motor
- Exact fit due to centering shoulders

**Material:** Aluminium, black anodised

[mm]

| Code No. | Type | A | B | C | D | E | F | G |
|---|---|---|---|---|---|---|---|---|
| 949207 | 30 | 63 | 40 | 40 | 60 | 53 | 70 | M5 |
| 94981 | 30 | 65 | 40 | 40 | 50 | 46 | 80 | M5 |
| 949208 | 40 | 65 | 50 | 50 | 60 | 53 | 70 | M5 |
| 949227 | 40 | 73 | 50 | 50 | 80 | 70,7 | 90 | M6 |
| 949100 | 40 | 73 | 50 | 50 | 50 | 46 | 80 | M5 |
| 949101 | 40 | 73 | 50 | 50 | 80 | 100 | Ø120 | Ø6,6 |
| 949209 | 50 | 66 | 52 | 52 | 60 | 53 | 70 | M5 |
| 949228 | 50 | 73 | 52 | 52 | 80 | 70,7 | 90 | M6 |
| 949605 | 50 | 73 | 52 | 52 | 50 | 65 | 80 | M5 |
| 94935 | 50 | 73 | 52 | 52 | 80 | 100 | Ø120 | Ø6,6 |
| 949210 | 60 | 66 | 60 | 60 | 60 | 53 | 70 | M5 |
| 949229 | 60 | 81 | 60 | 60 | 80 | 70,7 | 90 | M6 |
| 949241 | 60 | 91 | 60 | 60 | 95 | 81,3 | 115 | M8 |
| 949107 | 60 | 85 | 60 | 60 | 50 | 65 | 80 | M5 |
| 949108 | 60 | 75 | 60 | 60 | 80 | 100 | Ø120 | Ø6,6 |
| 949404 | 80 | 74 | 80 | 80 | 60 | 53 | 70 | M5 |
| 949230 | 80 | 86 | 80 | 80 | 80 | 70,7 | 90 | M6 |
| 949242 | 80 | 96 | 80 | 80 | 95 | 81,3 | 115 | M8 |
| 94958 | 80 | 86 | 80 | 80 | 50 | 46 | 80 | M5 |
| 94940 | 80 | 86 | 80 | 80 | 80 | 100 | Ø120 | Ø6,6 |

## Coupling



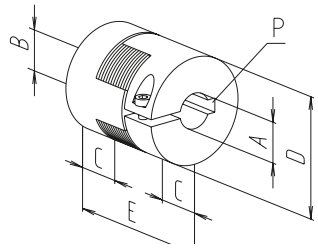


- Small size
- Shaft connection without backlash
- Maintenance-free
- Easy plug-in assembly

**Material:** Aluminium

[mm]

| Code No. | ØA | ØB | C | ØD | E | P | Torque [Nm] with feather key | Torque [Nm] without feather key |
|---|---|---|---|---|---|---|---|---|
| 9109200695 | 6 | 9,5 | 10 | 20 | 30 | 2x2 / – | 5 | 3 |
| 9109200612 | 6 | 12 | 10 | 22 | 30 | 2x2 / 3x3 | 5 | 3 |
| 9114300611 | 6 | 11 | 11 | 30 | 35 | 2x2 / 4x4 | 12 | 6 |
| 9114300895 | 8 | 9,5 | 11 | 30 | 35 | 2x2 / – | 12 | 6 |
| 9114300811 | 8 | 11 | 11 | 30 | 35 | 2x2 / 4x4 | 12 | 6 |
| 9114300812 | 8 | 12 | 11 | 30 | 35 | 2x2 / 4x4 | 12 | 6 |
| 9114300814 | 8 | 14 | 11 | 30 | 35 | 2x2 / 5x5 | 12 | 6 |
| 9114309510 | 9,5 | 10 | 11 | 30 | 35 | – / 3x3 | 12 | 6 |
| 9114309512 | 9,5 | 12 | 11 | 30 | 35 | – / 4x4 | 12 | 6 |
| 9114301011 | 10 | 11 | 11 | 30 | 35 | 3x3 / 4x4 | 12 | 6 |
| 9114301012 | 10 | 12 | 11 | 30 | 35 | 3x3 / 4x4 | 12 | 6 |
| 9114301014 | 10 | 14 | 11 | 30 | 35 | 3x3 / 5x5 | 12 | 6 |
| 9114301112 | 11 | 12 | 11 | 30 | 35 | 4x4 / 4x4 | 12 | 6 |
| 9114301114 | 11 | 14 | 11 | 30 | 35 | 4x4 / 5x5 | 12 | 6 |
| 9114301212 | 12 | 12 | 11 | 30 | 35 | 4x4 / 4x4 | 12 | 6 |
| 9114301214 | 12 | 14 | 11 | 30 | 35 | 4x4 / 5x5 | 12 | 6 |
| 9119409514 | 9,5 | 14 | 25 | 40 | 65 | – / 5x5 | 17 | 10 |
| 9119401214 | 12 | 14 | 25 | 40 | 65 | 4x4 / 5x5 | 17 | 10 |
| 9119401219 | 12 | 19 | 25 | 40 | 65 | 4x4 / 6x6 | 17 | 10 |
| 9119401414 | 14 | 14 | 25 | 40 | 65 | 5x5 / 5x5 | 17 | 10 |
| 9119401419 | 14 | 19 | 25 | 40 | 65 | 5x5 / 6x6 | 17 | 10 |

# PLS – Drive

**Order information:**

- Reductions 1:1.5, 1:2, 1:3, 1:4 or 1:5 on request

## Angular gear

- Fits all on PLS
- Can be retrofitted
- Low torsional backlash
- Low noise level
- Spiral toothing

**Scope of delivery:**
Angular gear 1:1,
Fastenings on PLS and synchronisation shaft depending on system



## Technical data angular gear

| | For PLS 30-80 | |
|---|---|---|
| Reduction | | 1:1 |
| Drive speed | $min^{-1}$ | 3000 |
| Torsional backlash at output shaft | arcmin | ≤ 9 |
| Efficiency at full load | % | > 98 |
| Running noise at 1500 rpm | db(A) | ≤ 70 |
| Weight | Kg | 4,5 |
| Surface | | Primer RAL 9005 – black matt |
| Geometric moment of inertia | $Kgcm^2$ | 1,79 |

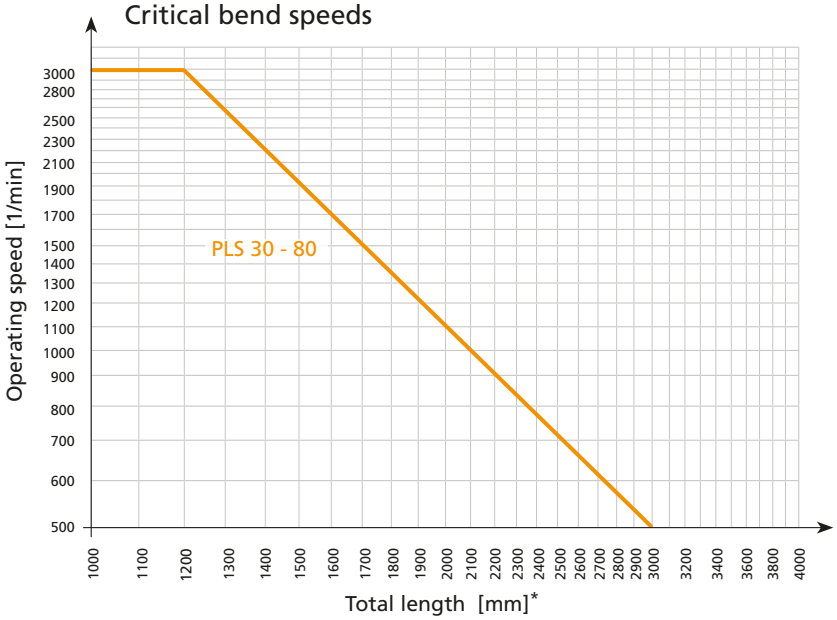


*To calculate the critical bending speed of system 4, use half of the total length.

## Angular gear for PLS

System 1

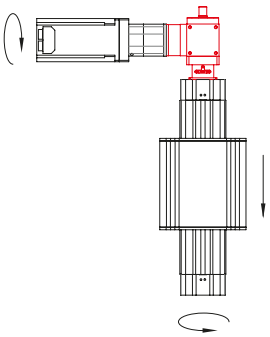

System 2

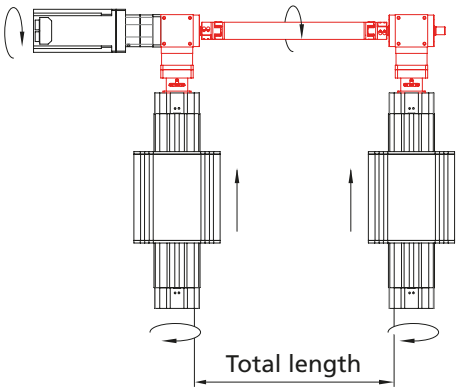


System 3

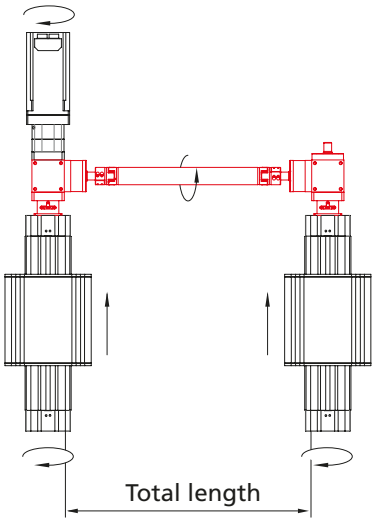


System 4

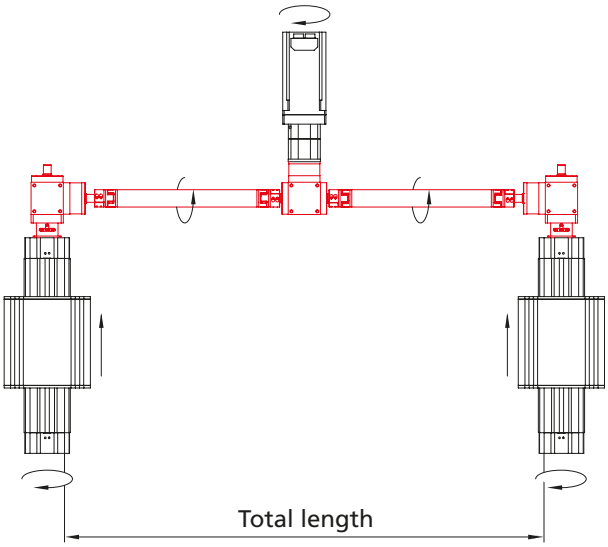


[mm]

| Code No. | Type | Basic length (minimum length) | Max. length (clearance) | Weight [kg] | |
|---|---|---|---|---|---|
| | | | | Basic length | per 100 mm travel |
| 982_ _ A1A0000 | Angular gear system 1 | - | - | 5,5 | - |
| 982_ _ A1B_ _ _ _ | Angular gear system 2 | 229 | 2984 | 10,5 | 0,1 |
| 982_ _ A1C_ _ _ _ | Angular gear system 3 | 334 | 3089 | 10,5 | 0,1 |
| 982_ _ A1D_ _ _ _ | Angular gear system 4 | 593 | 6153 | 10,5 | 0,1 |

Total length (mm)

20 = PLS 30
21 = PLS 40
22 = PLS 50
23 = PLS 60
24 = PLS 80

**Note:**
Additional information, dimensions, accessories and necessary tools for assembling the angular gears can be found

**Chapter:**
Motors and controls

# PLS – Position determination

## Positioning indicator

- Permitted ambient temperature +80°C
- Figure height 6 mm
- Reading accuracy ± 0.1 mm

**Material:** Housing made of polyamide 6
Orange RAL 2004
Steel parts galvanised

**Scope of delivery:** Positioning indicator, clamping ring, shaft extension and fastenings

**Note:** "rising" and "falling" versions refer to the clockwise rotation of the drive shaft.



Installation position: horizontal

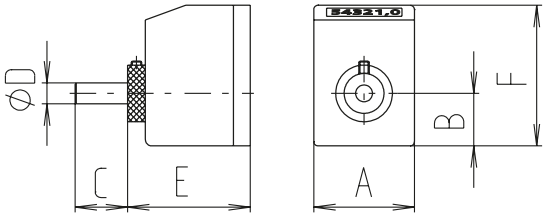




Installation position: vertical

[mm]

| Type | Installation position | Code No. | Version | Code No. | Version* | A | B | C | D | E | F |
|---|---|---|---|---|---|---|---|---|---|---|---|
| 30 | Horizontal | 91090 | 3 mm rising | 910151 | 6 mm rising | 48 | 25 | 25 | 6 | 59 | 67 |
| 30 | | 91093 | 3 mm falling | 910152 | 6 mm falling | 48 | 25 | 25 | 6 | 59 | 67 |
| 30 | Vertical | 910110 | 3 mm rising | 910153 | 6 mm rising | 48 | 25 | 25 | 6 | 59 | 67 |
| 30 | | 910111 | 3 mm falling | 910154 | 6 mm falling | 48 | 25 | 25 | 6 | 59 | 67 |
| 40 | Horizontal | 91094 | 4 mm rising | 910155 | 8 mm rising | 48 | 25 | 28 | 8 | 59 | 67 |
| 40 | | 91095 | 4 mm falling | 910156 | 8 mm falling | 48 | 25 | 28 | 8 | 59 | 67 |
| 40 | Vertical | 910112 | 4 mm rising | 910157 | 8 mm rising | 48 | 25 | 28 | 8 | 59 | 67 |
| 40 | | 910113 | 4 mm falling | 910158 | 8 mm falling | 48 | 25 | 28 | 8 | 59 | 67 |
| 50 | Horizontal | 91096 | 4 mm rising | 910159 | 8 mm rising | 48 | 25 | 30 | 10 | 59 | 67 |
| 50 | | 91097 | 4 mm falling | 910160 | 8 mm falling | 48 | 25 | 30 | 10 | 59 | 67 |
| 50 | Vertical | 910114 | 4 mm rising | 910161 | 8 mm rising | 48 | 25 | 30 | 10 | 59 | 67 |
| 50 | | 910115 | 4 mm falling | 910162 | 8 mm falling | 48 | 25 | 30 | 10 | 59 | 67 |
| 60 | Horizontal | 91098 | 4 mm rising | 910163 | 8 mm rising | 48 | 30 | 38 | 12 | 59 | 73 |
| 60 | | 91099 | 4 mm falling | 910164 | 8 mm falling | 48 | 30 | 38 | 12 | 59 | 73 |
| 60 | Vertical | 910116 | 4 mm rising | 910165 | 8 mm rising | 48 | 30 | 38 | 12 | 59 | 73 |
| 60 | | 910117 | 4 mm falling | 910166 | 8 mm falling | 48 | 30 | 38 | 12 | 59 | 73 |
| 80 | Horizontal | 91008 | 5 mm rising | 91082 | 10 mm rising | 48 | 25 | 38 | 14 | 59 | 81 |
| 80 | | 91018 | 5 mm falling | 91083 | 10 mm falling | 48 | 25 | 38 | 14 | 59 | 81 |
| 80 | Vertical | 91028 | 5 mm rising | 91084 | 10 mm rising | 48 | 25 | 38 | 14 | 59 | 81 |
| 80 | | 91038 | 5 mm falling | 91085 | 10 mm falling | 48 | 25 | 38 | 14 | 59 | 81 |

* Versions with double pitch, e.g. for mounting on righthand/lefthand screws

## Holder for mechanical limit switch

- Clamping with fixing plates to guide profile
- Simple axial displacement and adjustment of holder is possible

**Material:** AlMgSi, clear, anodised
Galvanised fastenings

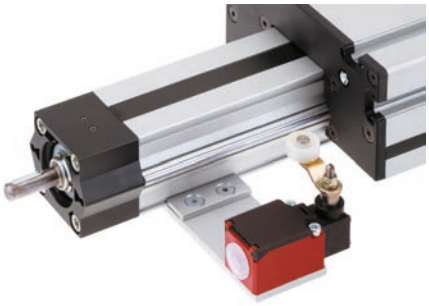

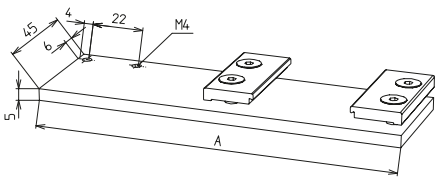


[mm]

| Code No. | Type | Version | A |
|---|---|---|---|
| 92784 | PLS (PLZ) 30 | Holder with fastenings without limit switch | 110 |
| 92785 | PLS (PLZ) 40 | | 130 |
| 92786 | PLS (PLZ) 50 | | 150 |
| 92787 | PLS (PLZ) 60 | | 177 |
| 92788 | PLS (PLZ) 80 | | 197 |

## Mechanical limit switch

- Limit switch with angle lever
- Compact design

**Material:** Thermoplastic, fully insulated



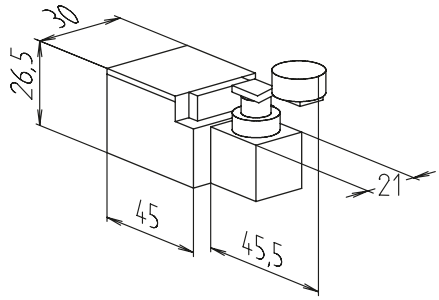


| | |
|---|---|
| Max. voltage | 250 V AC |
| Max. switching current | 6 A |
| Max. starting current | 16 A |
| Operating cycles | Max. 6,000/h |
| Mechanical lifetime | 1 x $10^7$ switching cycles |
| Axis lever adjustment | Engages at l 360° |
| Protection class | IP 65 |
| Ambient temperature | -30°C to +80°C |

| Code No. | Type | Switching function |
|---|---|---|
| 91905 | PLS 30-80 | NC/NO |

# PLS – Position determination

## Holder for inductive limit switch

- Clamping on guide profile
- Simple axial displacement and adjustment of holder is possible
- Holder with fastenings without limit switch

**Material:** AlMgSi, clear, anodised
Galvanised fastenings

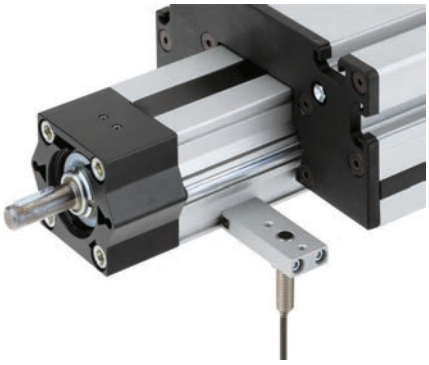

Version 2
Type 30-80

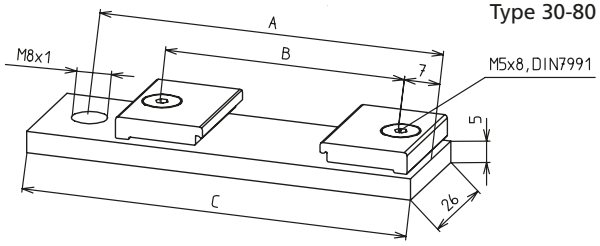


Version 1
Type 50-80

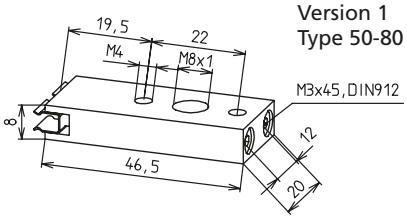


[mm]

| Code No. | Type | Version | A | B | C |
|---|---|---|---|---|---|
| 92990 | PLS 30 | 2 | 64.5 | 46 | 74 |
| 92991 | PLS 40 | 2 | 80 | 56 | 90 |
| 92992 | PLS 50 | 2 | 96 | 66 | 106 |
| 92993 | PLS 60 | 2 | 80 | 80 | 123.5 |
| 92994 | PLS 80 | 2 | 133.5 | 100 | 143.5 |
| 92986 | PLS 50-80 | 1 | – | – | – |

## Inductive limit switch

- Function indicator (LED)
- Maintenance-free

**Material:** Housing: stainless steel



| Type | 30-80 |
|---|---|
| Voltage | 10 - 30 V DC |
| Max. switching current | 150 mA |
| Operating distance | 2 mm for steel |
| Protection class | IP 67 |
| Ambient temperature | -25°C to +70°C |
| Cable lengths | 2m |

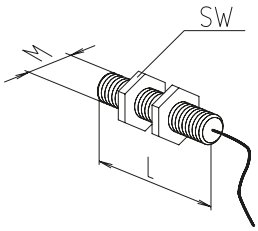


[mm]

| Code No. | Type | Switching function | L | M | Wrench size (SW) |
|---|---|---|---|---|---|
| 92826 | PLS 30-80 | Changeover | 40 | 8x1 | 13 |

# Profile guide/actuator – RK DuoLine S

## The all-rounder
## with encapsulated drive/guiding concept

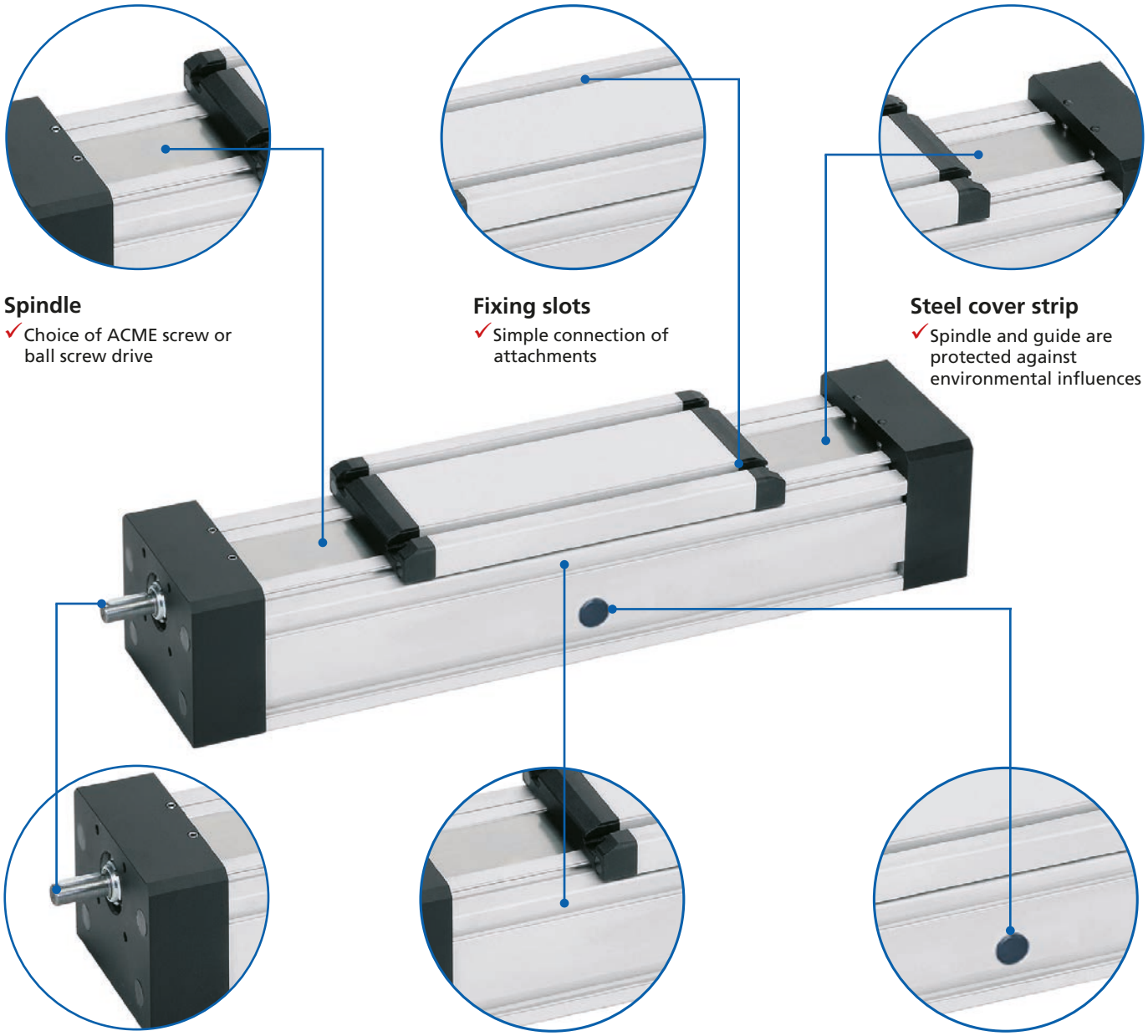

**Spindle**
✓ Choice of ACME screw or ball screw drive

**Fixing slots**
✓ Simple connection of attachments

**Steel cover strip**
✓ Spindle and guide are protected against environmental influences

**Shafts**
✓ Choice of 1 or 2 shafts

**Guide system**
✓ Choice of ball rail guide or roller guide
✓ Completely integrated system

**Central maintenance opening**

### Features:

- Choice of internal ball rail guide or roller guide
- Carriage and guide profile made of extruded aluminium
- Internal components covered
- Central maintenance opening for roller guide adjustment and lubrication
- Compact and flat design
- BLOCAN® slot geometries for fixing accessories and attachments

### Options:

- Second free-running carriage
- Extended carriage
- Alternative screw leads

# RK DuoLine S linear unit - Table of contents


## Properties/Technical data

- General information/operating conditions ... 256
- Load data ... 257

## Versions
(Dimensions, order numbers)

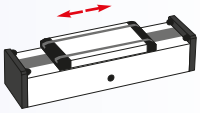

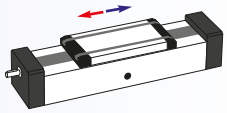

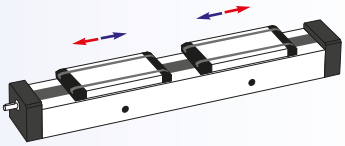

- RK DuoLine R guide unit ... 258 - 259
- Righthand thread ... 260 - 261
- Right and lefthand thread ... 262 - 263

## Accessories

**Fixing**
- Slot stones ... 264
- Threaded bar ... 265

**Drive**
- Motor adaptor ... 266
- Coupling ... 266
- Angular drive ... 267

**Position determination**
- Limit switches/holder ... 268

# RK DuoLine S – Technical data

## General information/operating conditions

| | |
|---|---|
| Design | Encapsulated drive and guiding concept, ACME screw drive |
| Guide | Choice of internal recirculating ball rail or rollers |
| Installation position | Any position |
| Lead accuracy | ± 0.15 mm/300 mm travel |
| Self-locking | Yes |
| Duty cycle | S3 30% Basic 1h |
| Ambient temperature | 0°C to +60°C |

## Screw lead

[mm]

| Type | Screw lead |
|---|---|
| 120 x 80, 120 x 80 II | 4 |

$$\text{Required screw speed n [rpm]} = \frac{\text{speed [m/min] x 1000}}{\text{screw lead [mm]}}$$

## Critical screw speed

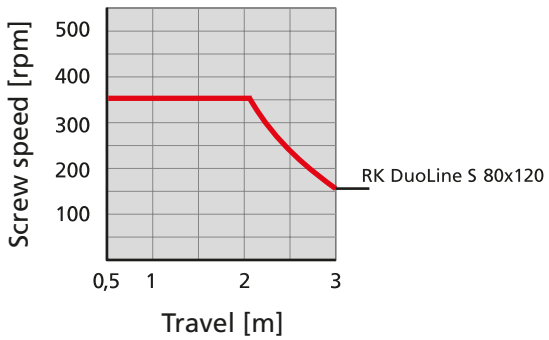


## No-load torque

[Nm]

| Type | Roller guide | Ball rail guide |
|---|---|---|
| RK DuoLine S 120 x 80 | 0.40 | 0.60 |
| RK DuoLine S 120 x 80 II | – | 0.70 |

## Load data*

F Force [N]

M Moment [Nm]

I Geometric moment of inertia [$cm^4$]

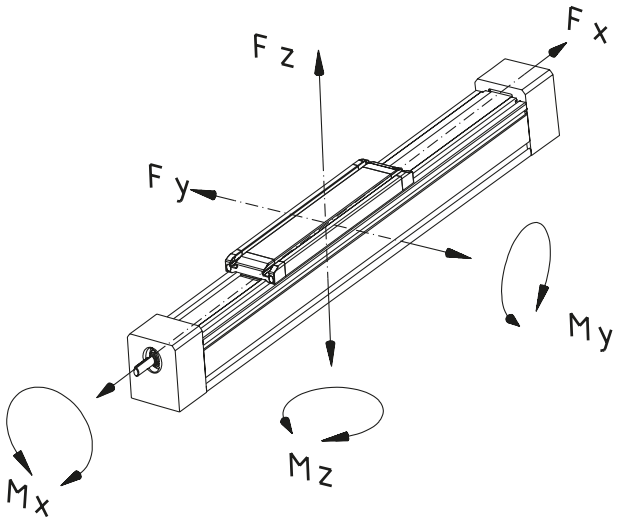


* With reference to carriage (static values, guide element resting on full surface)

| Type | Fx | Fy | Fz | Mx | My | Mz |
|---|---|---|---|---|---|---|
| RK DuoLine S 120 x 80 roller guide | 3400 | 2550 | 2550 | 118 | 150 | 150 |
| RK DuoLine S 120 x 80, ball rail guide | 3400 | 5000 | 6000 | 210 | 430 | 370 |
| RK DuoLine S 120 x 80 II, ball rail guide | 3400 | 5000 | 6000 | 380 | 430 | 370 |

## Geometric moment of inertia

[$cm^4$]

| Type | Iy | Iz |
|---|---|---|
| RK DuoLine S 120 x 80 roller guide | 189.96 | 595.83 |
| RK DuoLine S 120 x 80, ball rail guide | 189.96 | 595.83 |
| RK DuoLine S 120 x 80 II, ball rail guide | 185.94 | 554.68 |

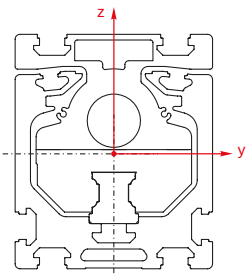

# RK DuoLine R – Versions

**Order information:**

- Longer travel lengths on request
- Second or extended carriage available on request

**Version ■ Guide**



| Code No. | Type | Basic length | B | C | F | H |
|---|---|---|---|---|---|---|
| MTA1280IA | RK DuoLine 120 x 80 II | 312 | 120 | 100 | 79.5 | 90 |
| MPA1280_A | RK DuoLine 120 x 80 | 312 | 120 | 100 | 79.5 | 97 |

MPA1280_A

_ _ _ _ Total length = basic length + travel [mm]

**Guide:**
H = roller guide
I = ball rail guide

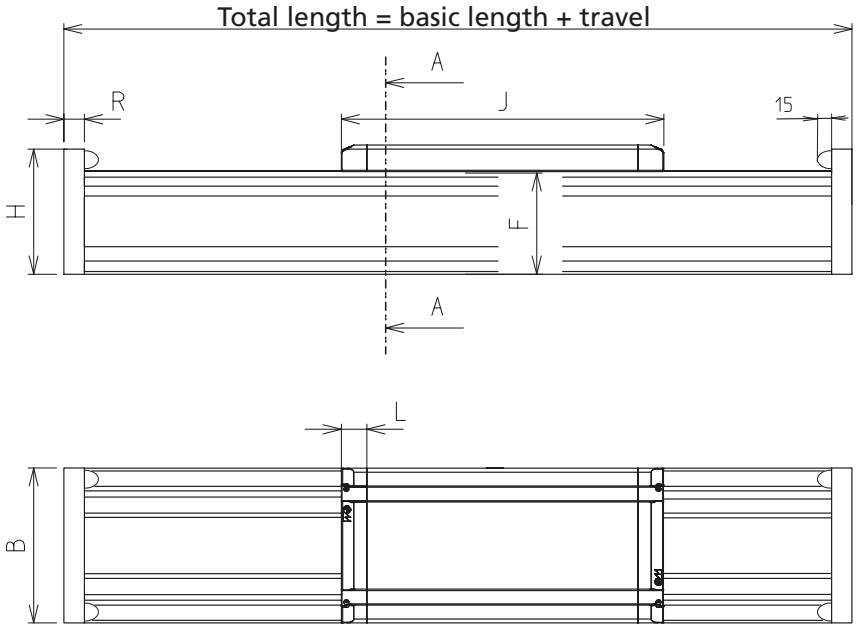


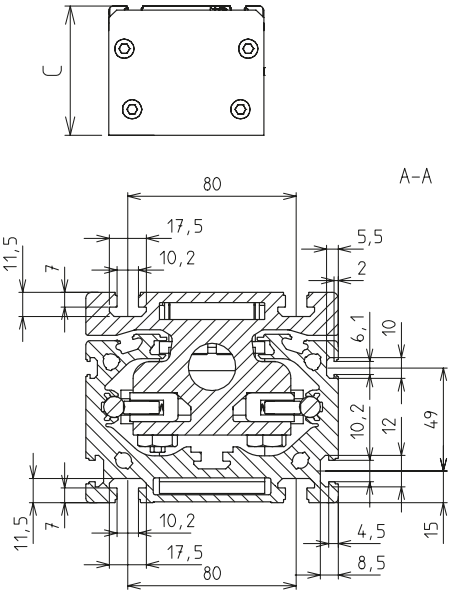


Type 120 x 80

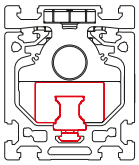

Ball rail guide
Type 120 x 80

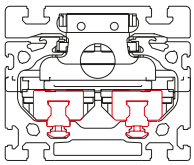

Two ball rail guide
Type 120 x 80 II

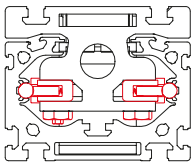

Roller guide
Type 120 x 80

[mm]

| J | L | R | Max. travel | Mass [kg] | |
|---|---|---|---|---|---|
| | | | | Basic length | per 100 mm travel |
| 250 | 20 | 16 | 3750 | 7.14 | 1.01 |
| 250 | 20 | 16 | 5750/3750 | 6.10/7.37 | 1.02/1.1 |

# RK DuoLine S – Versions

**Order information:**

- Longer travel lengths on request
- Second free-running carriage available on request

**Version** ■ **Righthand thread**



| Code No. | Type | Spindle | Basic length | B | C | D1 | Ø D2 | E | F |
|---|---|---|---|---|---|---|---|---|---|
| TRA1280_I | 120 x 80 II | 20 x 4 | 354 | 120 | 100 | 42 | 12 | 80 | 79.5 |
| TCA1280__ | 120 x 80 | 20 x 4 | 354 | 120 | 100 | 42 | 12 | 80 | 79.5 |

____ Total length = basic length + travel [mm]

**Guide:**
H = roller guide
I = ball rail guide

**Shafts:**
T = 1 drive shaft
U = 2 drive shafts

RK ROSE+KRIEGER

Total length = basic length + travel

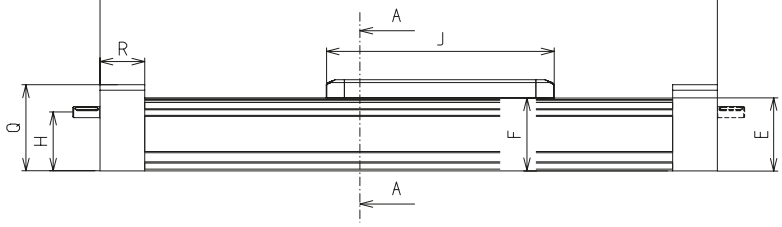


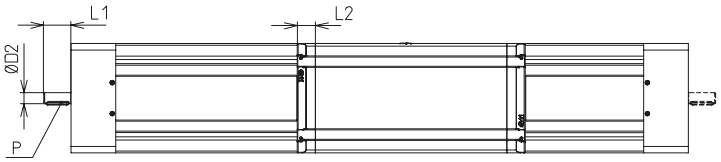


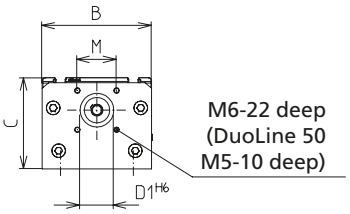


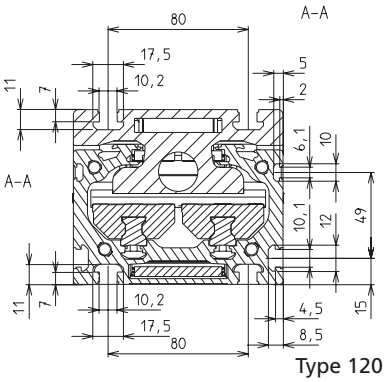


Type 120 x 80

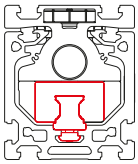

Ball rail guide
Type 120 x 80

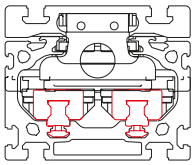

Two ball rail guide
Type 120 x 80 II

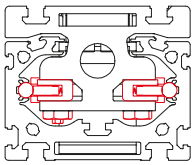

Roller guide
Type 120 x 80

[mm]

| H | J | L1 | L2 | M | P | Q | R | Max. travel | Mass [kg] | |
|---|---|---|---|---|---|---|---|---|---|---|
| | | | | | | | | | Basic length | per 100 mm travel |
| 64.5 | 250 | 30 | 20 | ☐ 43 | 4 x 4 x 25 | 95.5 | 52 | 2924 | 11.00 | 1.24 |
| 64.5 | 250 | 30 | 20 | ☐ 43 | 4 x 4 x 25 | 95.5 | 52 | 2924 | 9.64/10.8 | 1.24 |

# RK DuoLine S – Versions

**Order information:**

- Longer travel lengths on request
- Extended carriages

**Version** ■ **Right *and* lefthand thread**




| Code No. | Type | Spindle | Basic length | B | C | D1 | Ø D2 | E | F |
|---|---|---|---|---|---|---|---|---|---|
| TRC1280_I | 120 x 80 II | 20 x 4 | 604 | 120 | 100 | 42 | 12 | 80 | 79.5 |
| TCC1280_ _ | 120 x 80 | 20 x 4 | 604 | 120 | 100 | 42 | 12 | 80 | 79.5 |

_ _ _ _ Total length = basic length + travel [mm]

**Guide:**
H = roller guide
I = ball rail guide

**Shafts:**
S = 1 drive shaft at lefthand thread end
T = 1 drive shaft at righthand thread end
U = 2 drive shafts

RK ROSE+KRIEGER

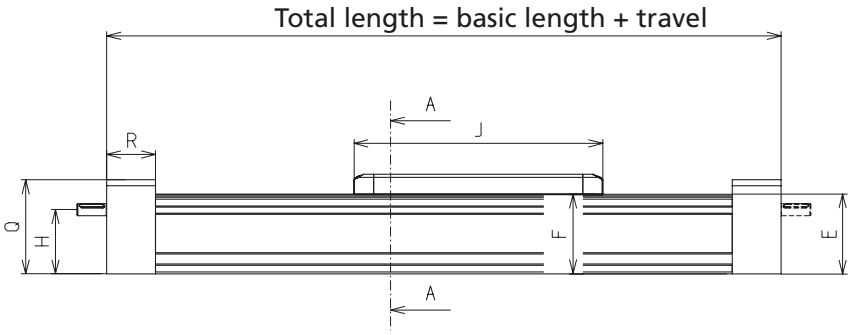


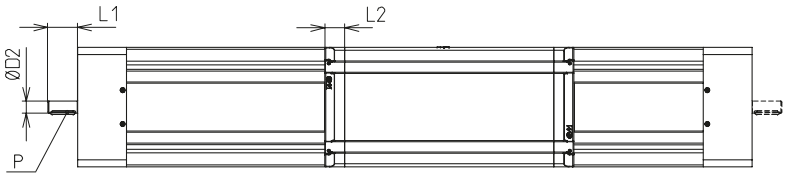


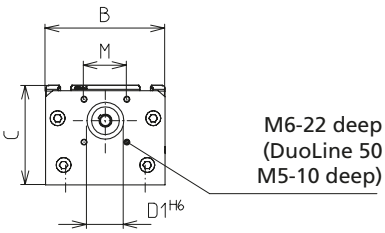


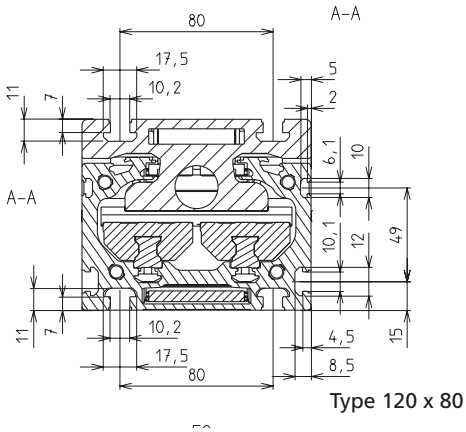


Type 120 x 80

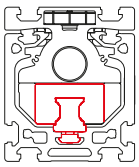

Ball rail guide
Type 120 x 80

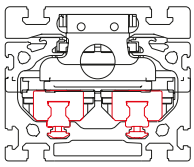

Two ball rail guide
Type 120 x 80 II

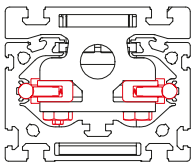

Roller guide
Type 120 x 80

[mm]

| H | J | L1 | L2 | M | P | Q | R | Max. travel | Mass [kg] | |
|---|---|---|---|---|---|---|---|---|---|---|
| | | | | | | | | | Basic length | per 100 mm travel |
| 64.5 | 250 | 30 | 20 | ☐ 43 | 4 x 4 x 25 | 95.5 | 52 | 2924 | 13.06 | 1.24 |
| 64.5 | 250 | 30 | 20 | ☐ 43 | 4 x 4 x 25 | 95.5 | 52 | 2924 | 12.28/12.66 | 1.21/1.30 |

# RK DuoLine S – Fixing

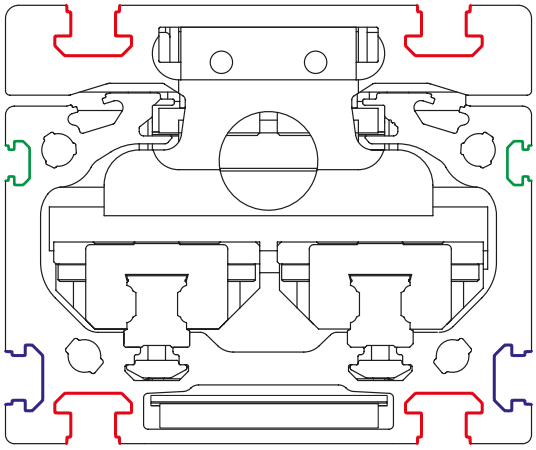

Type 120 x 80

40 slot geometry
30 slot geometry
20 slot geometry

**Order instruction square nut:**

- **Purchase only in lot sizes and a multiple of that, see product table below**

- Profile slots in the carriage and the guide profile facilitate fixation
- Slot stones can be inserted and positioned at the guide profile and carriage

**Material:** Galvanised steel

## Slot stones

**Slot stone -B-**
can be swivelled into the slot

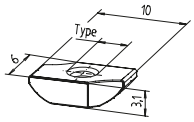


**Slot stone -N-**
can be slid into the slot

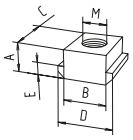


**Slot stone -K-**
can be swivelled into the slot

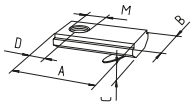


[mm] 


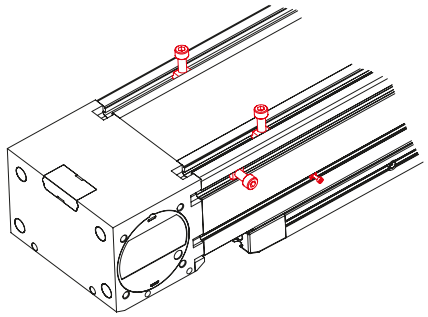

View of DuoLine from below

| Code No. | Type | lot sizes | Slot geometry | A | B | C | D | E | M8M | F [N] |
|---|---|---|---|---|---|---|---|---|---|---|
| **Slot stone -B-** | | | | | | | | | | |
| E00017CEE | M3 | 10, 20, 30... pcs | 20 | | | | | | | |
| E00058CEE | M4 | 10, 20, 30... pcs | 20 | | | | | | | |
| **Slot stone -N-** | | | | | | | | | | |
| 4006202 | M8 | 10, 20, 30... pcs | 30 | 5 | 10 | 13 | 13 | 3 | M8 | 4000 |
| 4026206 | M8 | 10, 20, 30... pcs | 40 | 8 | 10 | 13 | 13 | 4 | M8 | 9000 |
| **Slot stone -K-** | | | | | | | | | | |
| 4006211 | M5 | 10, 20, 30... pcs | 30 or higher | 21 | 12 | 4 | 7 | – | M5 | 5000 |
| 4006212 | M6 | 10, 20, 30... pcs | 30 or higher | 21 | 12 | 4 | 7 | – | M6 | 5000 |
| 4016212 | M6 | 10, 20, 30... pcs | 40 | 21 | 14 | 4 | 7 | – | M6 | 5000 |

## Threaded bar

- Threaded strip for lateral insertion in the profile slot
- Fixing in carriage with set screw

**Material:** Galvanised steel

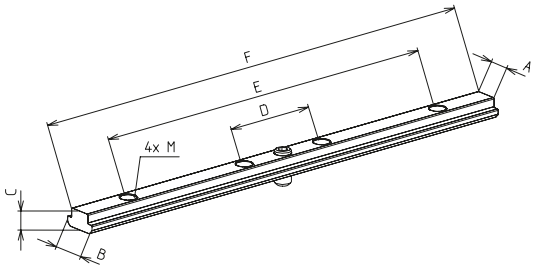


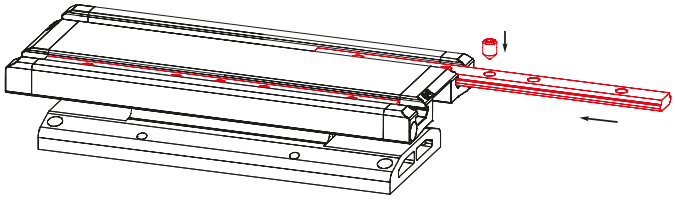

[mm]

| Code No. | Version | Slot geometry | A | B | C | D | E | F | M |
|---|---|---|---|---|---|---|---|---|---|
| 4816500 | RK DuoLine 120 x 80 (II) | 40 | 10 | 15 | 8 | 40 | 160 | 210 | M8 |

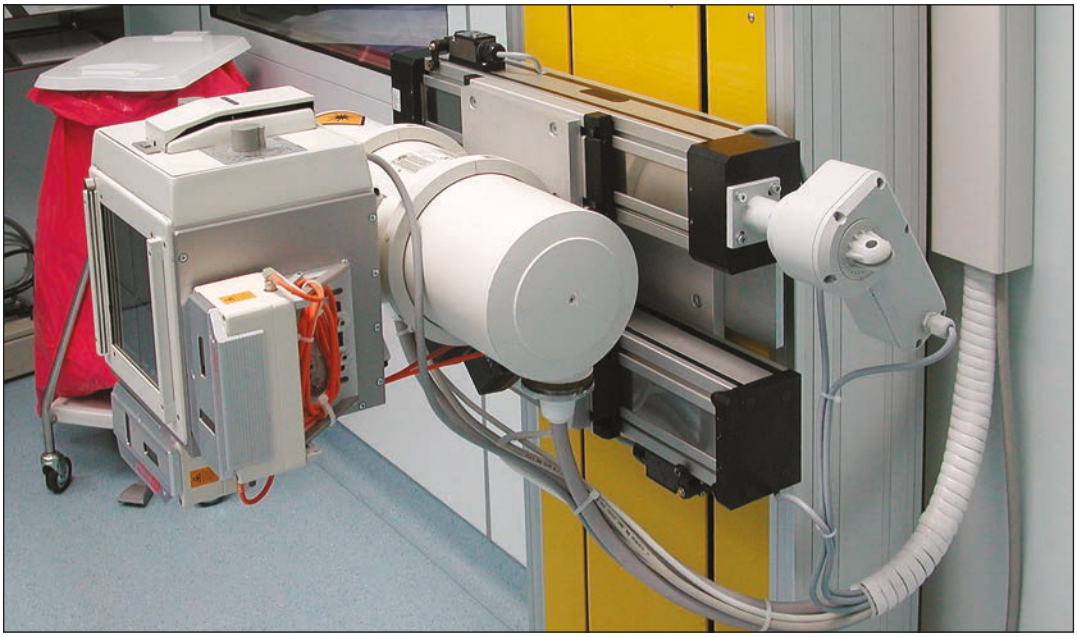

X-ray head adjustment using RK DuoLine S

## Selection table
## Motor adaptor/coupling

| Type | Servo motors without gear | | | Three-phase motor | |
|---|---|---|---|---|---|
| | RK-AC 118 | RK-AC 240 | RK-AC 470 | 90/120W | 180/250 W |
| RK DuoLine S 120 | 949053 | 949055 | 949057 | 949060 | 949061 |
| | 911430<br>1112 | 911940<br>1214 | 911940<br>1219 | 911940<br>1212 | 911430<br>1214 |

**Note:** For further details on motor versions, please refer to the chapter "Motors and controls"

## Motor adaptor

- Simple assembly on linear unit and motor
- Exact fit due to centering shoulders

**Material:** Aluminium, black anodised

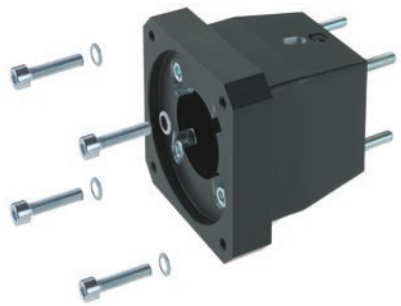

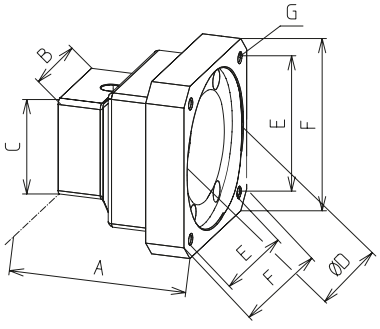


[mm]

| Code No. | Type | A | B | C | D | E | F | G |
|---|---|---|---|---|---|---|---|---|
| 949053 | 120x80<br>120x80 II | 66 | 60 | 60 | 60 | 53 | 70 | M5 |
| 949055 | | 81 | 60 | 60 | 80 | 70,7 | 90 | M6 |
| 949057 | | 91 | 60 | 60 | 95 | 81,3 | 115 | M8 |
| 949060 | | 75 | 60 | 60 | 50 | 65 | 80 | M5 |
| 949061 | | 75 | 60 | 60 | 80 | 100 | Ø120 | Ø6,6 |

## Coupling

- Small size
- Shaft connection without backlash
- Maintenance-free
- Easy plug-in assembly

**Material:** Aluminium, black anodised



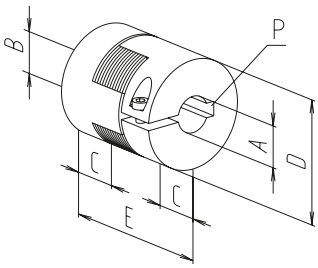


[mm]

| Code No. | ØA | ØB | C | ØD | E | P | Torque [Nm] | |
|---|---|---|---|---|---|---|---|---|
| | | | | | | | with feather key | without feather key |
| 9109200695 | 6 | 9,5 | 11 | 30 | 35 | 2x2 / – | 12 | 6 |
| 9109200612 | 6 | 12 | 11 | 30 | 35 | 2x2 / 4x4 | 12 | 6 |
| 9114300611 | 6 | 11 | 11 | 30 | 35 | 2x2 / 4x4 | 12 | 6 |
| 9114300616 | 6 | 16 | 11 | 30 | 35 | 2x2 / 5x5 | 12 | 6 |
| 9114300895 | 8 | 9,5 | 11 | 30 | 35 | 2x2 / 5x5 | 12 | 6 |
| 9114300811 | 8 | 11 | 11 | 30 | 35 | 4x4 / 4x4 | 12 | 6 |
| 9114300812 | 8 | 12 | 11 | 30 | 35 | 4x4 / 5x5 | 12 | 6 |
| 9114300814 | 8 | 14 | 11 | 30 | 35 | 2x2 / 5x5 | 12 | 6 |
| 9114309510 | 9,5 | 10 | 11 | 30 | 35 | – / 3x3 | 12 | 6 |
| 9114309512 | 9,5 | 12 | 11 | 30 | 35 | – / 4x4 | 12 | 6 |
| 9114301011 | 10 | 11 | 11 | 30 | 35 | 3x3 / 4x4 | 12 | 6 |
| 9114301012 | 10 | 12 | 11 | 30 | 35 | 3x3 / 4x4 | 12 | 6 |

## Angular drive

- Angular drives for RK DuoLine S available on request.



# RK DuoLine S – Position determination

## Mechanical limit switch

- Limit switch with angle lever
- Compact design

**Material:** Thermoplastic, self-extinguishing

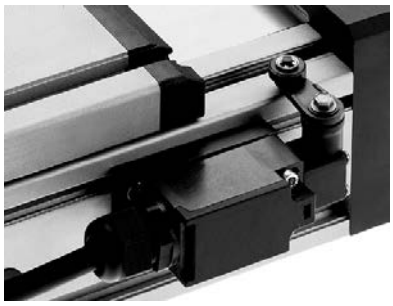

| | |
|---|---|
| Max. voltage | 230 V AC |
| Max. switching current | 4 A |
| Max. starting current | 10 A |
| Operating frequency | Max. 5000/h |
| Mechanical lifetime | 20 x $10^6$ switching cycles |
| Axis lever adjustment | locking by 360° |
| Protection class | IP 67 |
| Ambient temperature | -30°C to +80°C |

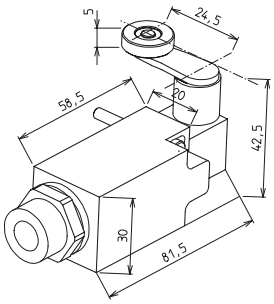


Type 120 x 80

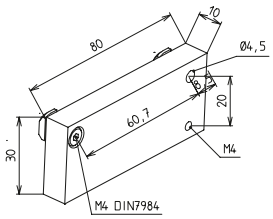


| Code No. | Type | Version |
|---|---|---|
| 92701 | 120 x 80 | Limit switch NC/NO with bracket |

## Inductive limit switch

- Maintenance-free

**Material:** Switch housing, aluminium, anodised



| | |
|---|---|
| Voltage | 10-30 V DC |
| Max. switching current | 10 mA |
| Max. starting current | 100 mA |
| Operating frequency | max. 5 kHz |
| Mechanical lifetime | independent of operating cycles |
| Operating distance | 1.5 mm |
| Protection class | IP 67 |
| Ambient temperature | -25°C to +75°C |

Type 120 x 80

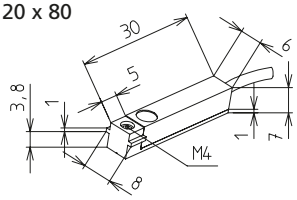


| Code No. | Type | Version |
|---|---|---|
| 92929 | 120 x 80 | NC, with bracket |

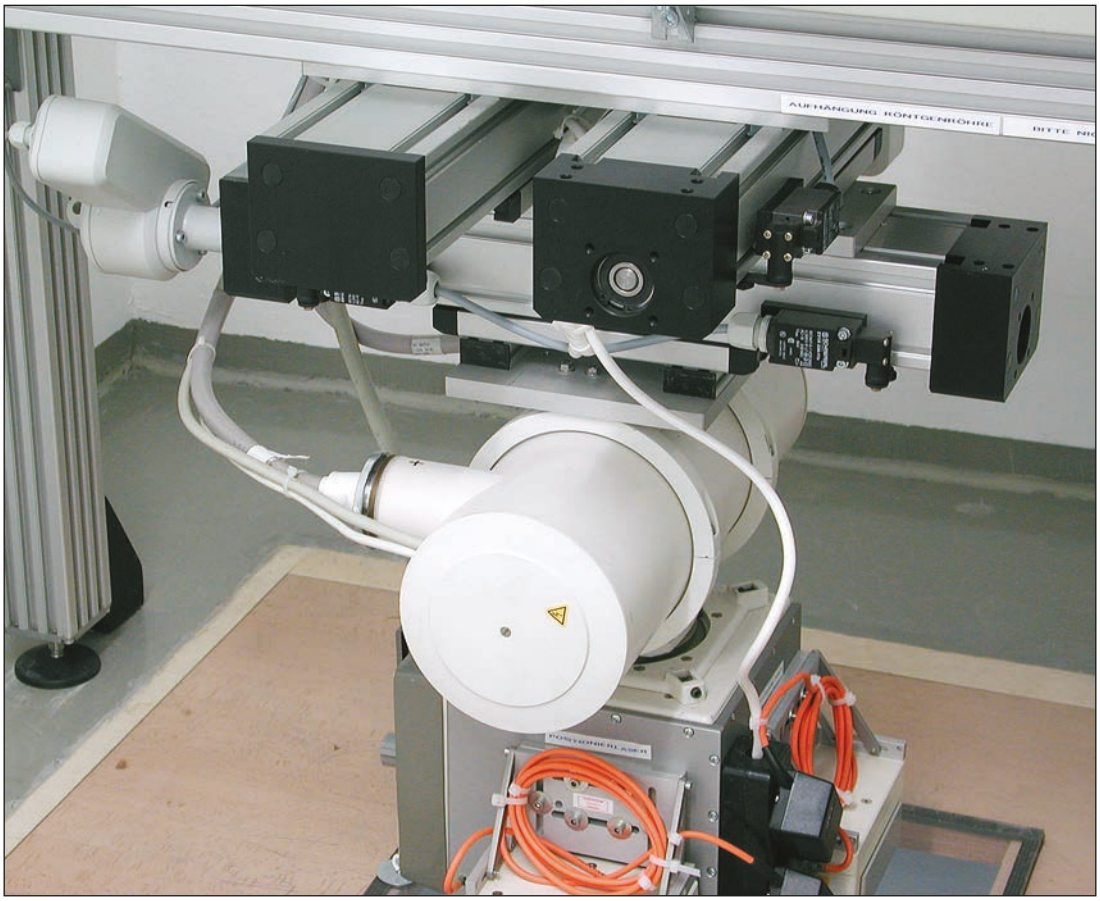


Suspension of an x-ray tube. X-Y adjustment of RK DuoLine S via EHL

# Profile guide/actuator – RK DuoLine S 60 / 80

## Spindle unit RK DuoLine S with trapezoidal thread

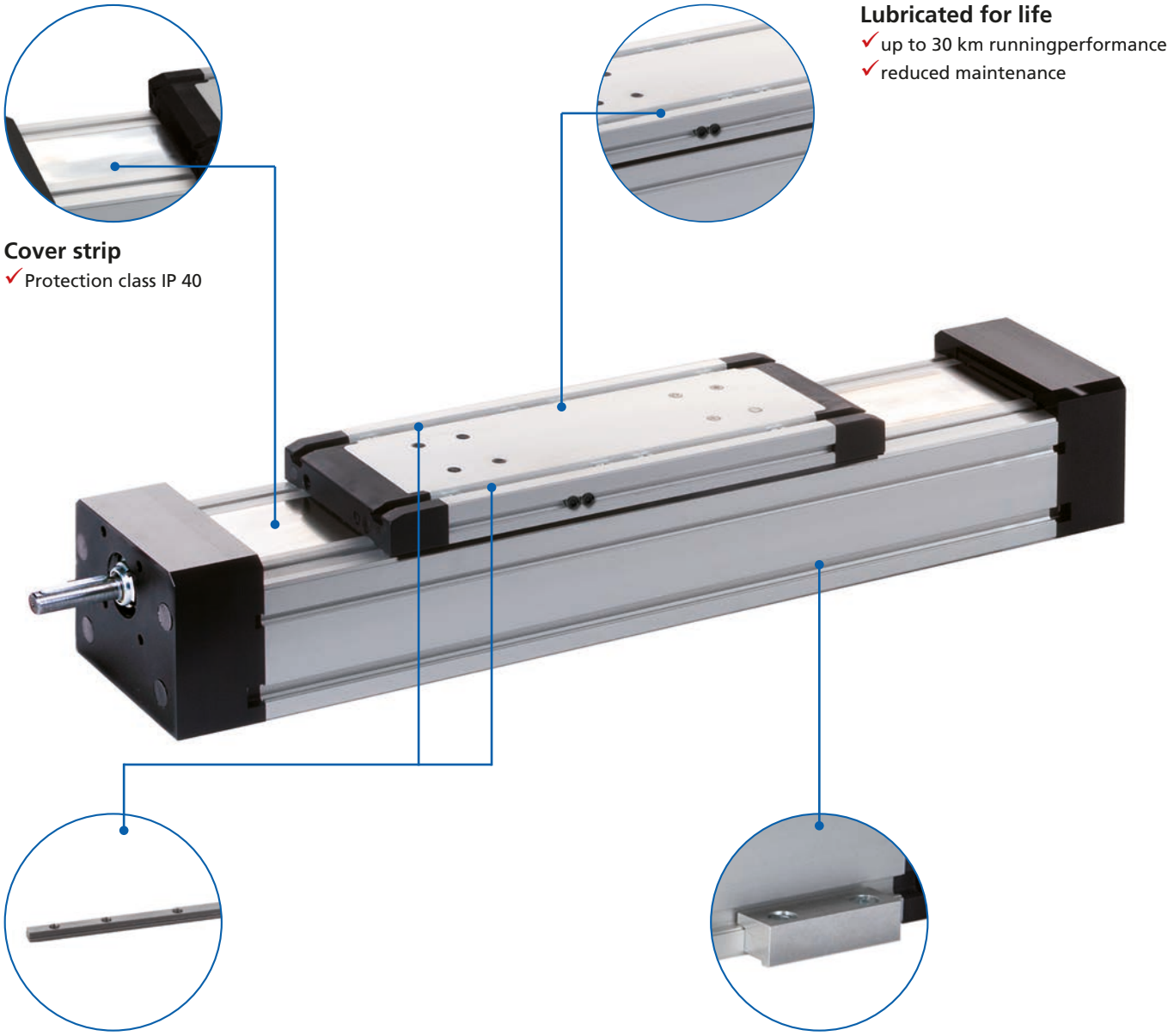

**Lubricated for life**
- ✓ up to 30 km runningperformance
- ✓ reduced maintenance

**Cover strip**
- ✓ Protection class IP 40

**Slot stone bar**
- ✓ Fixes your load securely

**Clamping bars**
- ✓ Reliable fixation of the unit

### Features:

- Max. travel speed regardless of length
- Lifetime lubricated

**RK DuoLine S Protect**
- IP 40 protection class due to steel cover strip and seals
- high Positioning accuracy

- Multiple moving screw supports
- Repeatability ± 0,1 mm

# RK DuoLine S 60/80 Protect - Table of contents


## Properties/Technical data

- General information/operating conditions ... 272
- Load data ... 273

## Versions
(Dimensions, order numbers)

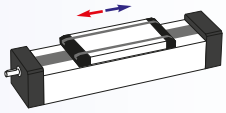

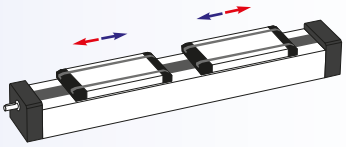

- Righthand thread ... 274 - 275
- Right and lefthand thread ... 276 - 277

## Accessories

**Fixing**

- Fixation of payload ... 278
- Clamping strips ... 278
- Slot stones ... 279

**Drive**

- Motor adapter ... 279

**Position determination**

- Limit switch ... 280 - 281

# RK DuoLine S 60 / 80 – Technical data

## General information / operating conditions

| | RK DuoLine S 60 | RK DuoLine S 80 |
|---|---|---|
| Guidance system | Ball rail system | Ball rail system |
| Installation position | any position | any position |
| Input torque max. | 3.0 Nm | 9.0 Nm |
| Max. speed | 0.02 m/s | 0,02 / 0,04 m/s (regardless of travel) |
| Max. acceleration | 3 m/s² | 3 m/s² |
| Repeat accuracy | ± 0.1 mm | ± 0,1 mm |
| Positioning accuracy | - | - |
| Max. no-load torque | 0.8 Nm | 1.0 Nm |
| Drive | Trapezoidal thread Ø16, Pitch 4 | Trapezoidal thread, Ø20, Pitch 4 or 8 mm, on the right |
| Pitch accuracy | (± 0.1 / 300 mm) | (± 0,1 / 300 mm) |
| Duty cycle | S3 30% Basic 1h | S3 30% Basis 1h |
| Ambient temperature | 0 to +60°C | 0 bis +60°C |
| Degree of protection | IP 40 | IP 40 |

## Dynamic load data

**F** Force [N]

**M** Torque [Nm]

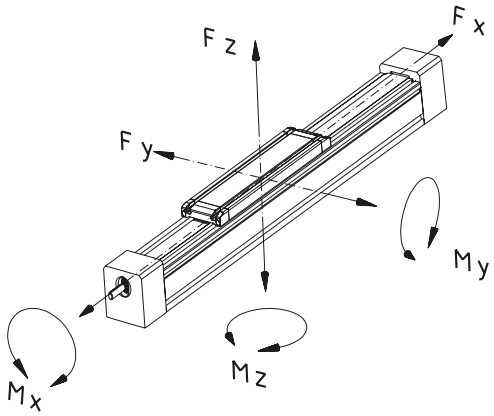


| Spindle drive | | | | | | | |
|---|---|---|---|---|---|---|---|
| Load data | Spindle | Fx | Fy | Fz | Mx | My | Mz |
| Standard guide carriages | | | | | | | |
| RK Duoline S 60 | 16x4 | 1400 | 700 | 2500 | 48 | 160 | 140 |
| RK Duoline S 80 | 20x4 / 20x8 | 2500 | 1000 | 4100 | 100 | 380 | 350 |
| Extended guide carriage | | | | | | | |
| RK Duoline S 60 | 16x4 | 1400 | 700 | 2500 | 48 | 250 | 220 |
| RK Duoline S 80 | 20x4 / 20x8 | 2500 | 1000 | 4100 | 100 | 620 | 550 |

## Geometric moment of inertia

[$cm^4$]

| | Iy | Iz |
|---|---|---|
| RK DuoLine S 60 | 48.97 $cm^4$ | 61.84 $cm^4$ |
| RK DuoLine S 80 | 116.76 $cm^4$ | 165.75 $cm^4$ |

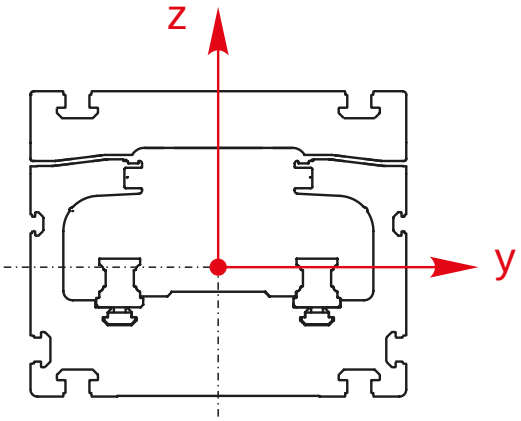

# RK DuoLine S 60 / 80 – Versions

**Order information:**

- Second free concurrent carriage on request
- Also available without screw drive as a torque support
- Lubrication over carriages on request

**Versions** ■ **Righthand thread**



**Key feature:**

✓ Lubricated for life up to 30 km running performance

| Code No. | Type | Basic length | B | C | D1 | D2 |
|---|---|---|---|---|---|---|
| TD13A5A1A15B0_ _ _ _ | RK DuoLine S 60 Protect | 321 | 60 | 80 | Ø32$^{H7}$ 2.3 deep | Ø10$_{k7}$ |
| TD13A5A1B15B0_ _ _ _ | RK DuoLine S 60 Protect with extended guide carriage | 411 | 60 | 80 | Ø32$^{H7}$ 2.3 deep | Ø10$_{k7}$ |

Total length (basic length + travel) mm

**Trapezoidal screw:**
16x4

| Code No. | Type | Basic length | B | C | D1 | D2 |
|---|---|---|---|---|---|---|
| TD13A2A1A1 _B0_ _ _ _ | RK DuoLine S 80 Protect | 370 | 80 | 100 | Ø42$^{H7}$ 2.3 deep | Ø14$_{k7}$ |
| TD13A2A1B1 _B0_ _ _ _ | RK DuoLine S 80 Protect with extended guide carriage | 502 | 80 | 100 | Ø42$^{H7}$ 2.3 deep | Ø14$_{k7}$ |

Total length (basic length + travel) mm

**Trapezoidal screw:**
5 = 20x4
6 = 20x8

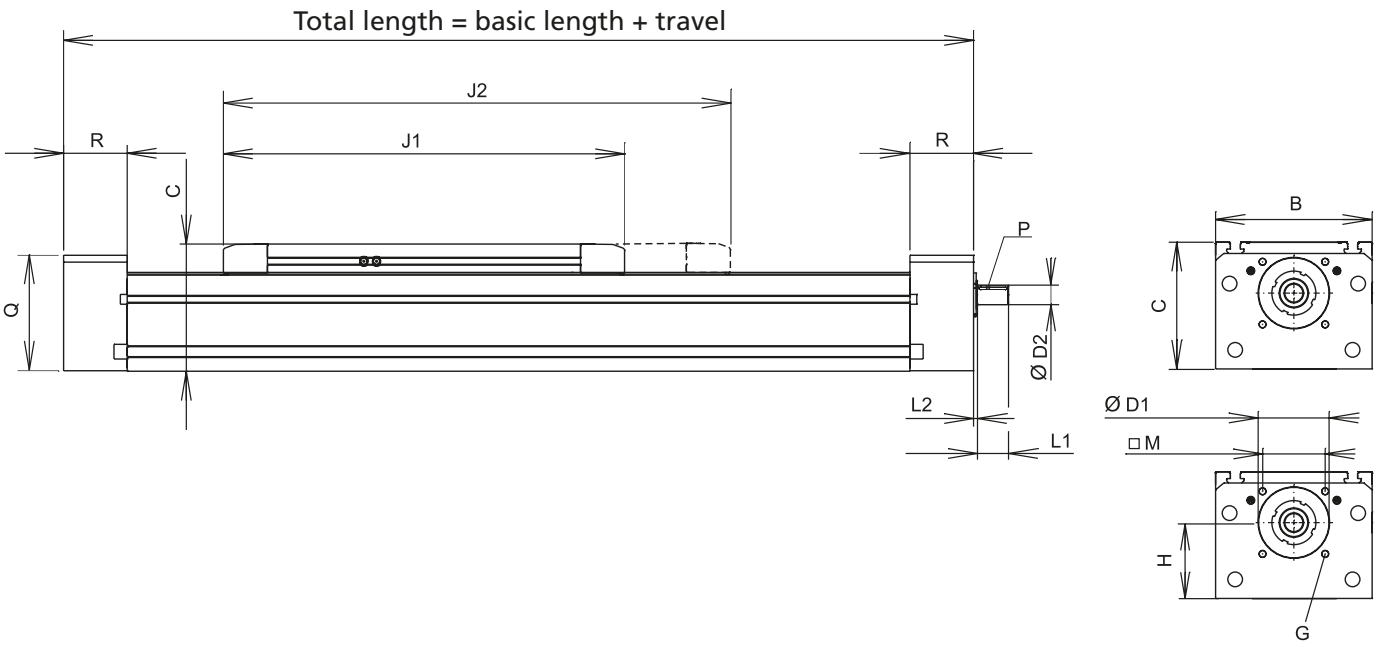


[mm]

| G | H | J1 | J2 | L1 | L2 | M | P | Q | R | Max. travel | Mass [kg] | |
|---|---|---|---|---|---|---|---|---|---|---|---|---|
| | | | | | | | | | | | Basic length | per 100 mm travel |
| M5-10 deep | 47.7 | 245 | - | 17.2 | 2.8 | 33x24 | 3x3x12 | 72.2 | 38 | 2664 | 3.44 | 0.60 |
| M5-10 deep | 47.7 | - | 335 | 17.2 | 2.8 | 33x24 | 3x3x12 | 72.2 | 38 | 2574 | 4.26 | 0.60 |

[mm]

| G | H | J1 | J2 | L1 | L2 | M | P | Q | R | Max. travel | Mass [kg] | |
|---|---|---|---|---|---|---|---|---|---|---|---|---|
| | | | | | | | | | | | Basic length | per 100 mm travel |
| M6-18 deep | 57.5 | 278 | - | 30 | 3.8 | □46±0.2 | 5x5x25 | 89 | 46 | 2890 | 6.74 | 0.96 |
| M6-18 deep | 57.5 | - | 410 | 30 | 3.8 | □46±0.2 | 5x5x25 | 89 | 46 | 2758 | 8.01 | 0.96 |

# RK DuoLine S 80 – Versions

**Order information:**

- Lubrication over carriages on request
- Extended carriages on request

**Version** ■ **Right- *and* lefthand thread**

**Version**

- Right and lefthand thread
  DuoLine S 60 16x4
  DuoLine S 80 20x4



**Key feature:**

✓Lubricated for life up to 30 km running performance

| Code No. | Type | Basic length | B | C | D1 | D2 |
|---|---|---|---|---|---|---|
| TD13A5_1A15B0_ _ _ _ | RK DuoLine S 60 Protect | 566 | 60 | 80 | Ø32$^{H7}$ 2.3 deep | Ø10$_{k7}$ |

Total lenght = basic length + total travel (mm)

E = 1 drive shaft at righthand thread end
G = 1 drive shaft at lefthand thread end

| Code No. | Type | Basic length | B | C | D1 | D2 |
|---|---|---|---|---|---|---|
| TD13A2_1A15B0_ _ _ _ | RK DuoLine S 80 Protect | 648 | 80 | 100 | Ø42$^{H7}$ 2.3 deep | Ø14$_{k7}$ |

Total lenght = basic length + total travel (mm)

E = 1 drive shaft at righthand thread end
G = 1 drive shaft at lefthand thread end

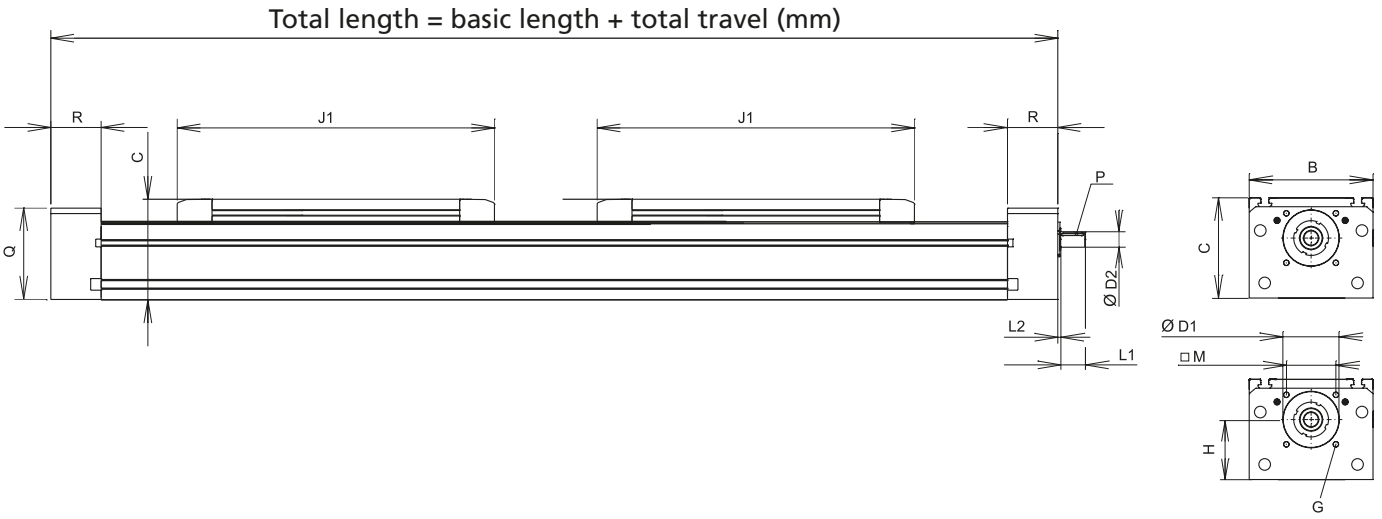


[mm]

| G | H | J1 | L1 | L2 | M | P | Q | R | Max. travel | Mass [kg] | |
|---|---|---|---|---|---|---|---|---|---|---|---|
| | | | | | | | | | | Basic length | per 100 mm travel |
| M5-10 deep | 47.7 | 245 | 20 | 2,8 | 33x24 | 3x3x12 | 72.2 | 38 | 2476 | 5.97 | 0.60 |

[mm]

| G | H | J1 | L1 | L2 | M | P | Q | R | Max. travel | Mass [kg] | |
|---|---|---|---|---|---|---|---|---|---|---|---|
| | | | | | | | | | | Basic length | per 100 mm travel |
| M6-18 deep | 57.5 | 278 | 30 | 3.8 | □46±0.2 | 5x5x25 | 89 | 46 | 2890 | 11.7 | 0.96 |

# RK DuoLine S 60 / 80 – Fixing

## Fixation of payload

- Two slot stone strips have been inserted in the guide carriage on which fittings can be securely attached in a variety of ways
- Profile slots in the guide carriage and guide profiles facilitate fixation

## RK DuoLine S 60

*only with version with extended guide carriage

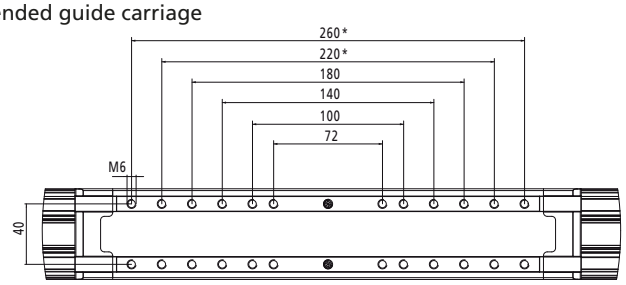


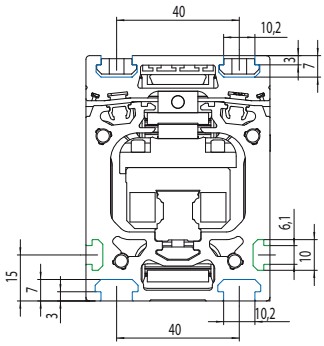


20 slot geometry

30 slot geometry

## RK DuoLine S 80

*only with version with extended guide carriage

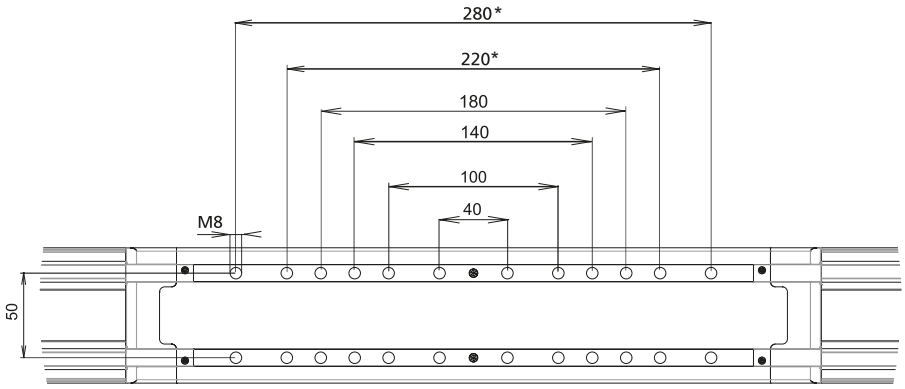


20 slot geometry

30 slot geometry

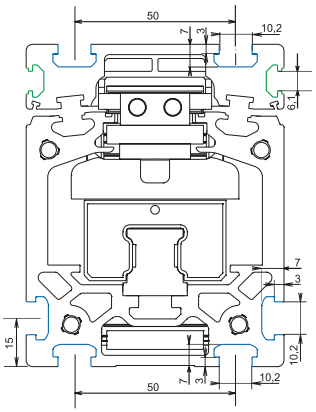


## Clamping strips

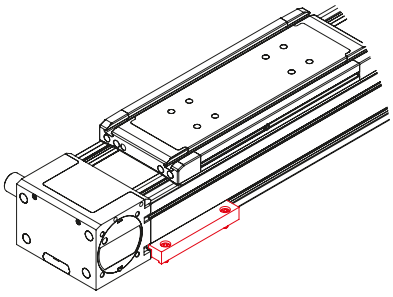

Fig.1: Ground assembly

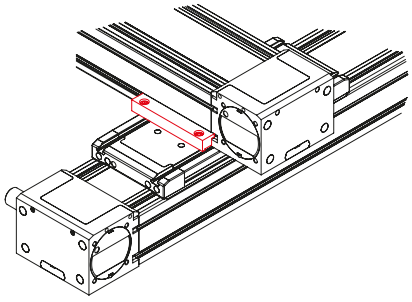

Fig.2: Crossing units

- Clamping strips facilitate fixation of the linear unit to the chassis or two units to a crossing table

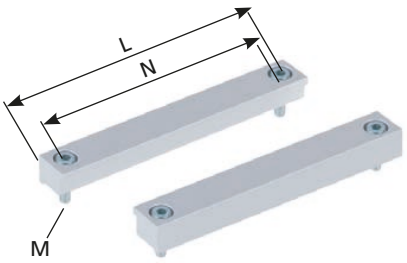


**Material:**
Natural anodised aluminium, galvanised fixation material.
**Scope of delivery:**
2 clamping strips with fixation material

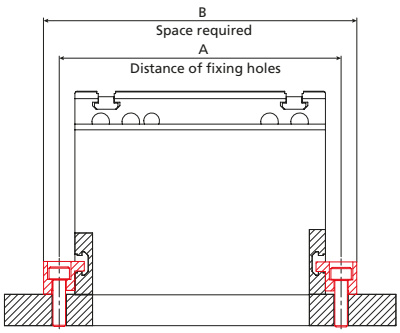


[mm]

| Code No. | Type | Fig. | A | B | L | M | N |
|---|---|---|---|---|---|---|---|
| 91806 | RK DuoLine 80 ground assembly | 1 | 100 | 122 | 76 | M8 | 50 |
| | RK DuoLine 80 crossing to 80 | 2 | | | | | |

**Order instruction square nut:**

- **Purchase only in lot sizes and a multiple of that, see product table below**

## Slot stones

- Slot stones can be inserted and positioned at the guide profile and guide carriage

**Material:** galvanised steel

**Slot stone -B-**
can be swivelled into the slot

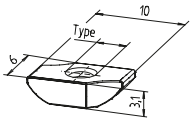


**Slot stone -N-**
can be slid into the slot

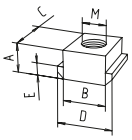


**Slot stone -K-**
can be swivelled into the slot

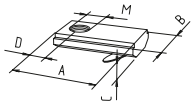


[mm] 


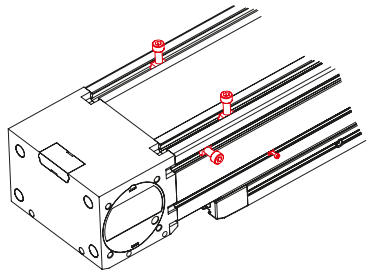

View of DuoLine from below

| Code No. | Type | lot sizes | Slot geometry | A | B | C | D | E | M8M | F [N] |
|---|---|---|---|---|---|---|---|---|---|---|
| **Slot stone -B-** | | | | | | | | | | |
| E00017CEE | M3 | 10, 20, 30... pcs | 20 | | | | | | | |
| E00058CEE | M4 | 10, 20, 30... pcs | 20 | | | | | | | |
| **Slot stone -N-** | | | | | | | | | | |
| 4006202 | M8 | 10, 20, 30... pcs | 30 | 5 | 10 | 13 | 13 | 3 | M8 | 4000 |
| **Slot stone -K-** | | | | | | | | | | |
| 4006211 | M5 | 10, 20, 30... pcs | 30 | 21 | 12 | 4 | 7 | – | M5 | 5000 |
| 4006212 | M6 | 10, 20, 30... pcs | 30 | 21 | 12 | 4 | 7 | – | M6 | 5000 |

## Motor adapter kit for RK-Motors

- Servomotors from the RK standard range can be easily connected
- Complete motor adapter kits manufactured to your specifications on request

**Scope of delivery:**
Motor adapter kit, elastomer coupling and fixation material



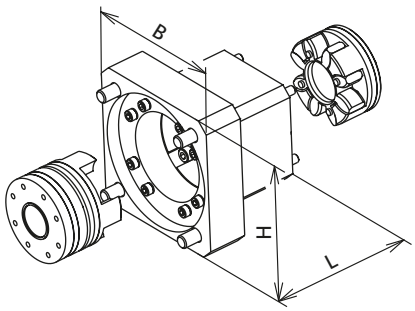


| Code No. | Type | Version |
|---|---|---|
| **Servo motors DuoLine S 60** | | |
| 949387 | RK-AC 112 | with gearbox – PLE 60 |
| 949388 | RK-AC 118 | without gearbox |
| 949389 | RK-AC 240 | without gearbox |
| **Servo motors DuoLine S 80** | | |
| 949360 | RK-AC 112 | with gearbox – PLE 60 |
| 949367 | RK-AC 240 | without gearbox |
| 949364 | RK-AC 260 / 280 | with gearbox – PLE 80 |
| 949366 | RK-AC 470 | without gearbox |
| **Three phase motors DuoLine S 80** | | |
| 949368 | DSM 90 / 120 W | with gearbox |
| 949369 | DSM 180 / 250 W | with gearbox |

## Mechanical limit switch

- External fixation on the guide profile

**Scope of delivery:**
Limit switch with set of fixing items

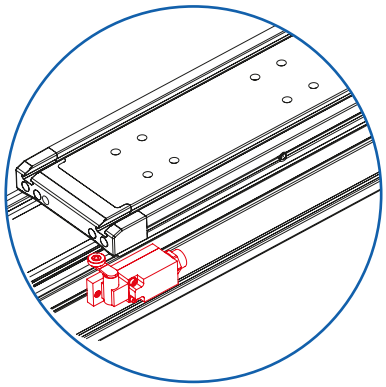

| | |
|---|---|
| Voltage | max. 230 V AC |
| Max. switching current | 4 A |
| Max. starting current | 10 A |
| Operating frequency | max. 5000 / h |
| Mechanical lifetime | 20x10$^6$ cycles |
| Axis leverage adjustment | locking by 360° |
| Degree of protection | IP67 |
| Ambient temperature | -30°C to +80°C |

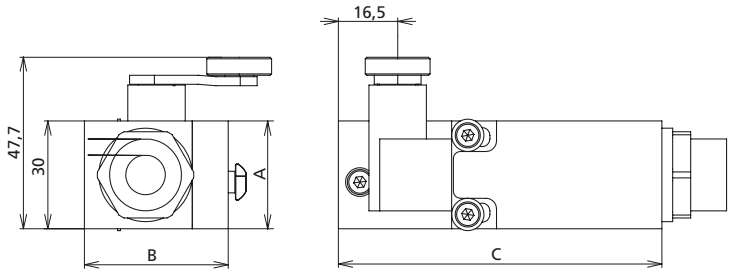


| Code No. | Type | A | B | C | Version |
|---|---|---|---|---|---|
| 92848 | RK DuoLine 60 | 49 | 39 | 82 | NO / NC, mechanical limit switch |
| 91919 | RK DuoLine 80 | 63 | 40 | 83 | |

## External inductive limit switch

- External fixation on the guide profilev

**Scope of delivery:**
Limit switch with set of fixing items

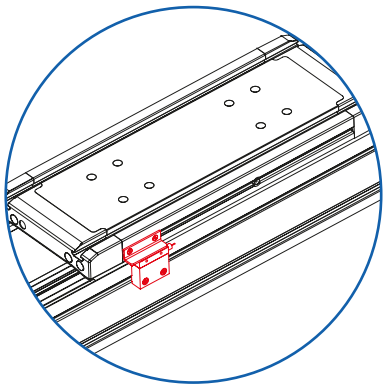

| | |
|---|---|
| Voltage | 10...30 VDC |
| Max. switching current | 100 mA |
| Operating frequency | max. 5 kHz |
| Mechanical lifetime | independent of operating cycles |
| Operating distance | 1.5 mm |
| Degree of protection | IP67 |
| Cable length | 5 m* |
| Ambient temperature | -25°C to +70°C |

*Other cable lengths available on request.

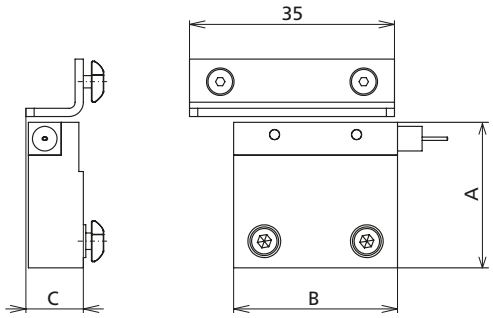


| Code No. | Type | A | B | C | Version |
|---|---|---|---|---|---|
| 92838 | RK DuoLine 60 | 52.8 | 25 | 10 | NO, External inductive limit switch |
| 92819 | RK DuoLine 80 | 71.5 | 25 | 10 | |

## Internal inductive limit switch

- Proximity switch integrated in the guide profile – no protruding contours

**Scope of delivery:**
Proximity switch with set of fixing items

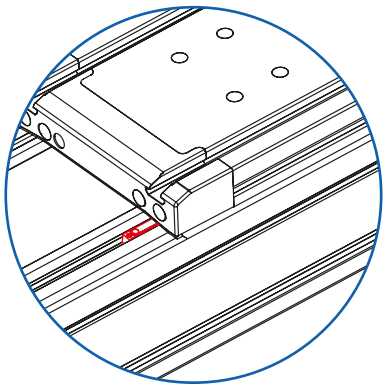

| Code No. | Type | Ausführung |
|---|---|---|
| 92828 | RK DuoLine 60 | NC, Internal inductive limit switch |
| 92820* | RK DuoLine 80 | |

* On this limit switch, the slot must be sealed off with a cover profile

## Cover profile

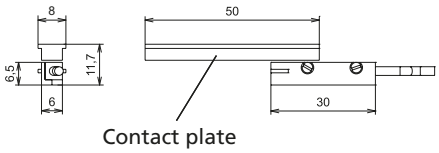


| Code No. | Version | | |
|---|---|---|---|
| E00024DAC | bar | black | 2.000 mm |

# Assembly examples

## RK DuoLine



1

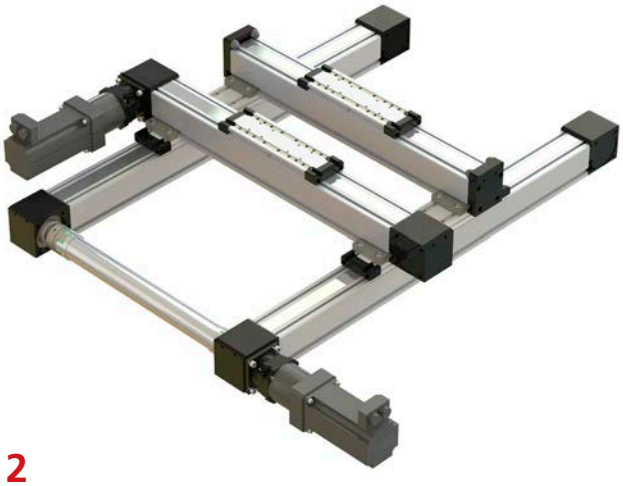

2

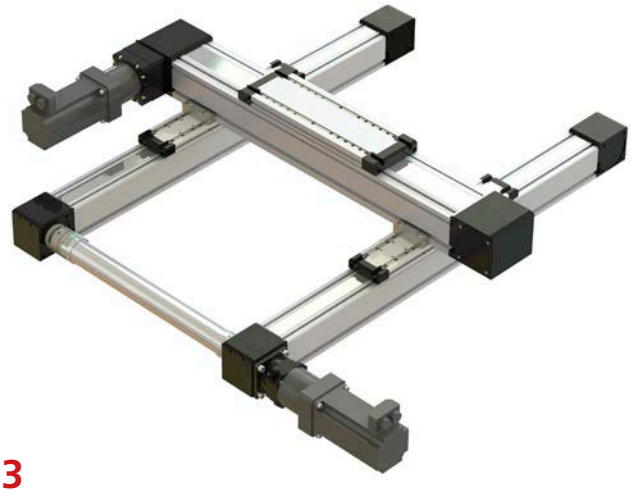

3



4



5



6

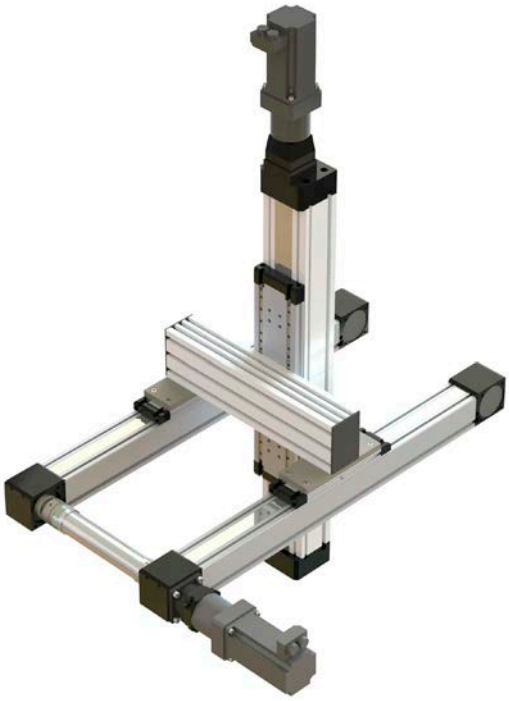

7

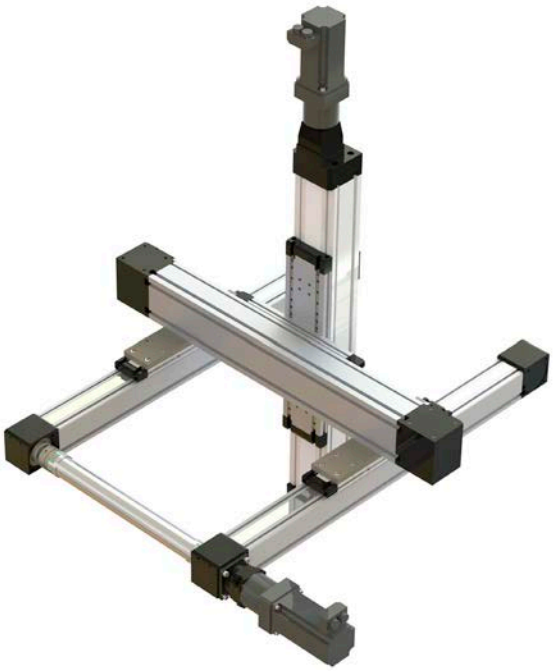

8

# Heavy duty cylinder – LZ 80

## The industrial design complete system with push/pull forces up to 10,000 N.

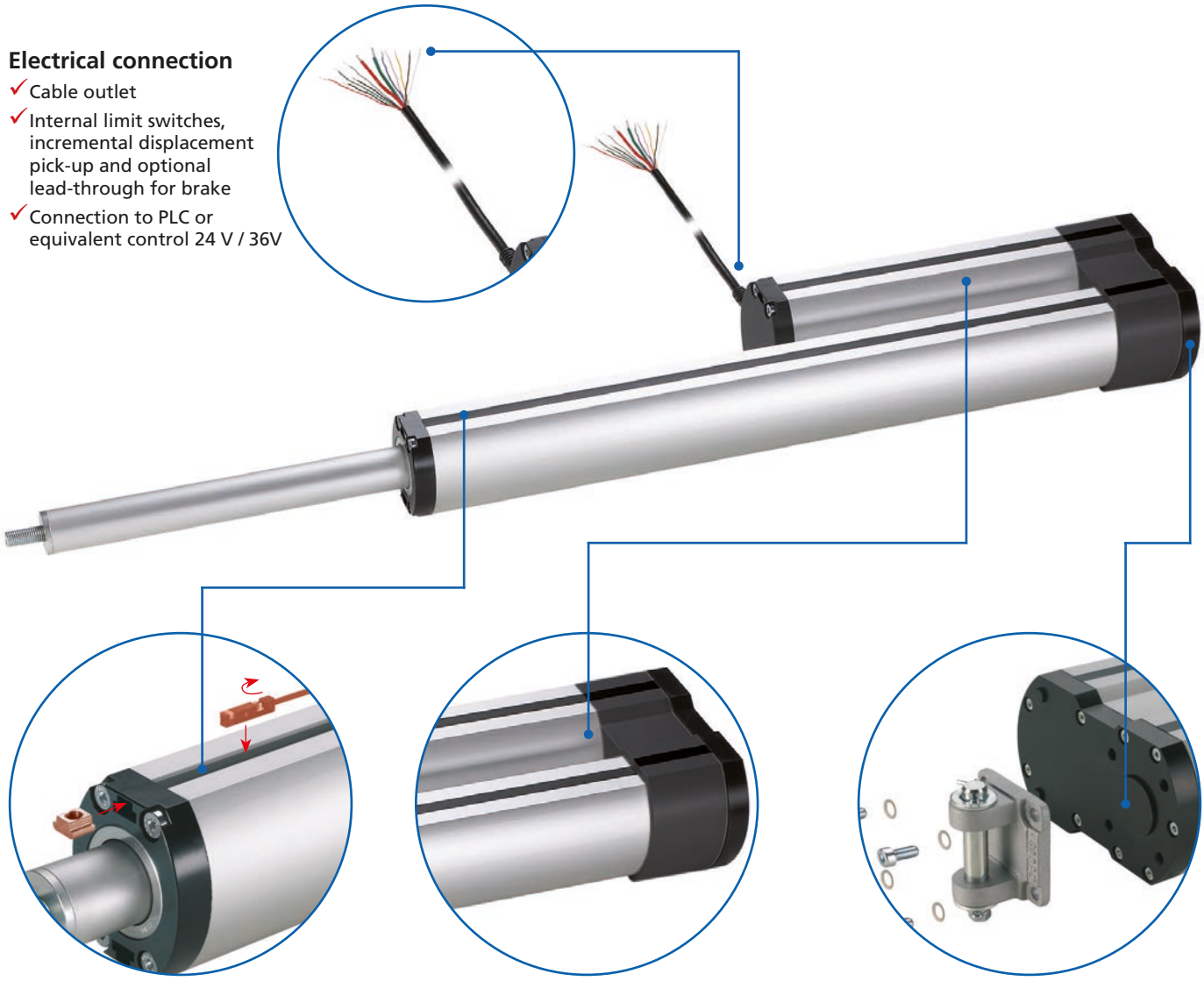

### Electrical connection

- ✓ Cable outlet
- ✓ Internal limit switches, incremental displacement pick-up and optional lead-through for brake
- ✓ Connection to PLC or equivalent control 24 V / 36V

### Adjustable external magnetic switch

- ✓ Covered in slot geometry
- ✓ Stroke can be adjusted
- ✓ Accessories can be retrofitted
- ✓ Pre-fitted with internal magnets for external magnetic switch

### High-performance DC motor

- ✓ Integrated motor brake on "ball screw" version

### Cylinder fixing

- ✓ Simple connection of trunnion flange, trunnion or clevis

## Features:

- Integrated DC drive
- Integrated limit switches
- Flexible use of space thanks to parallel motor positioning
- Coverable slot geometry on both sides, supports a range of fixing options
- Push rod with rotation locking
- Maintenance-free for entire lifetime of unit
- IP 54
- Self-locking
- Choice of ACME screw or recirculating-ball spindle

## Options:

- Optional IP 66 can be supplied
- Special stroke lengths available on request
- ACME screw version optionally available with motor brake

# LZ 80 Electric cylinder - Table of contents


## Properties/Technical data

- General information/operating conditions ... 286

## Versions
**(Dimensions, order numbers)**

LZ 80 electric cylinder with ACME screw and ball screw drive:

- Dimensions/Order table ... 287

## Accessories

**Fixing**

- Slot stones ... 288
- Clevis ... 288
- Bearing block for Clevis ... 288
- Swivel head ... 288
- Fork attachment for Swivel head ... 289
- Swivel ... 289
- Bearing block for Swivel ... 289
- Trunnion mounting set ... 290
- Support blocks for trunnion mounting ... 290

**Position determination**

- Magnetic switch ... 291
- Controls ... 291

# LZ 80 – Technical data

## General information/operating conditions

| | ACME screw | Ball screw |
|---|---|---|
| Design | Linear cylinder with integrated DC motor | |
| Guide | Double bearing with POM bushes | |
| Installation position | Any position, without shear forces | |
| Ambient temperature | +5°C to +40°C | |
| Repeatability | 0.5 mm | |
| Speed | Max. 25 mm/s | |
| Duty cycle (at max. load) | 10% (1 min. operating time; 9 mins rest time/depending on sizing, up to 100% duty cycle possible) | |
| Voltage | 24 V | |
| Current consumption | 12 A | |
| Power input | 288 W | |
| Protection class | IP 54 (optional IP 66) | |
| Compressive force/tensile force | 10,000 N | |
| Self-locking | 10,000 N | 10,000 N (motor brake) |

## Speed/Force diagram

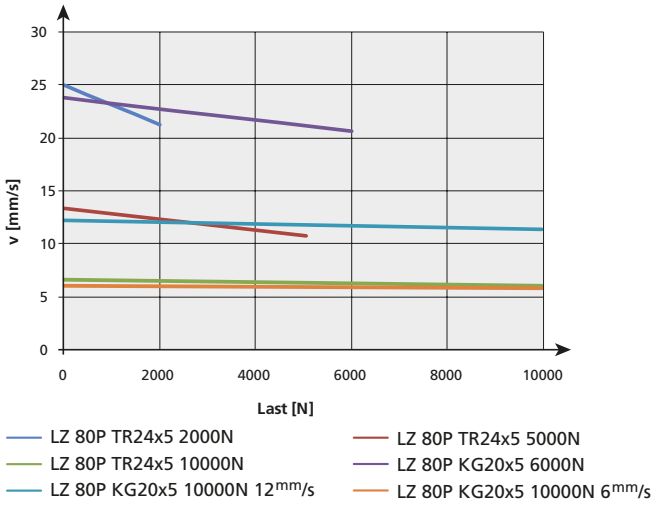


## Current consumption/Force diagram

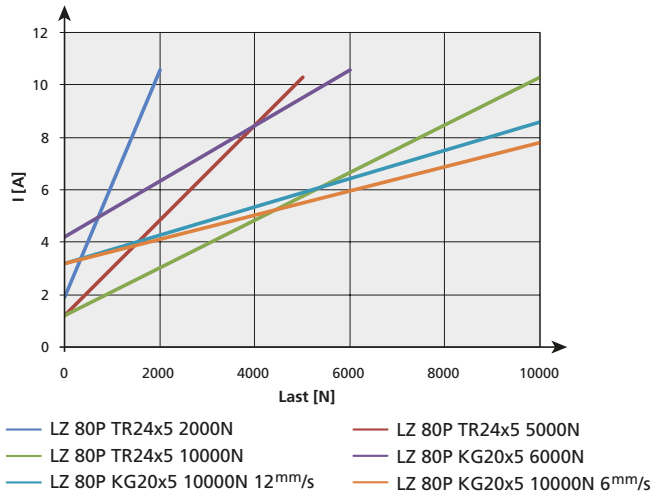




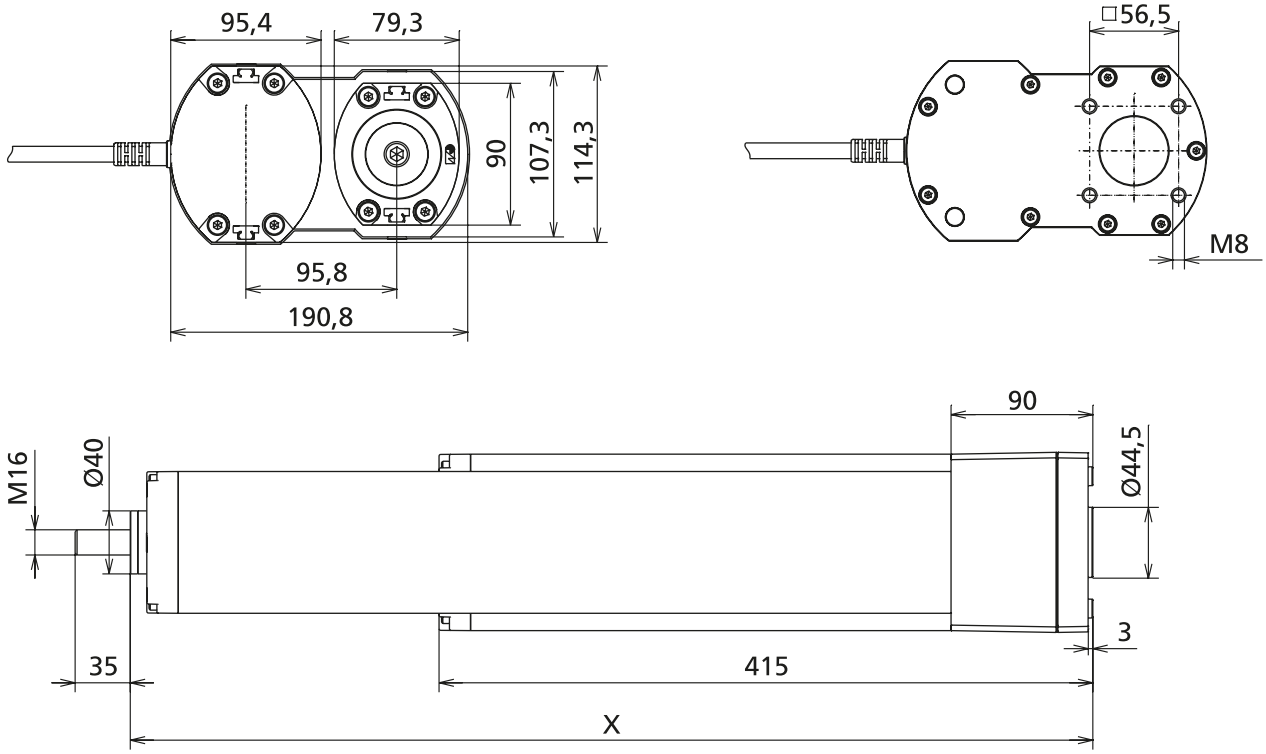


## Versions LZ 80

| Code No. | Type | Max. force F [N] | Max. speed [mm/s] |
|---|---|---|---|
| **ACME screw 24 x 5** | | | |
| QLP00AAAB_ _ _ _ | LZ 80 | 2,000 | 25 |
| QLP00ABAB_ _ _ _ | LZ 80 | 5,000 | 13 |
| QLP00ACAB_ _ _ _ | LZ 80 | 10,000 | 6.5 |
| **Ball screw drive 20 x 5** | | | |
| QLP11ADAB_ _ _ _ | LZ 80 | 6,000 | 24 |
| QLP11AEAB_ _ _ _ | LZ 80 | 10,000 | 12 |
| QLP11AFAB_ _ _ _ | LZ 80 | 10,000 | 6 |

Stroke lengths available in increments of 7.5 mm
e.g. stroke [mm] = 0 3 9 7 .5

| Stroke [mm] | Installation dimension X [mm] | Weight [kg] |
|---|---|---|
| 7.5 to 397.5 | Stroke + 311.0 | 12.5-16.0 |
| 405.0 to 600.0 | Stroke + 348.5 | 16.0-18.0 |
| 607.5 to 795.0 | Stroke + 386.0 | 18.0-20.0 |
| 802.5 to 1005.0 | Stroke + 431.0 | 20.0-22.0 |

# LZ 80 – Fixing/Position determination

**Order instruction square nut:**

- **Purchase only in lot sizes and a multiple of that, see product table below**

- Slot stones facilitate the attachment of fittings to the cylinder.
- To this end, the slot stones can be slid into the lateral slots (Type -N-) or swivelled into the slot from above (Type -R-).

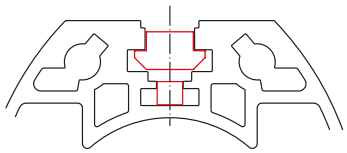




## Slot stone



Type -N-

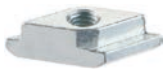

Type -R-

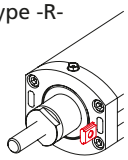

| Code No. | Type | lot sizes | F [N] |
|---|---|---|---|
| 4026203 | Slot stone -N- M6 | 10, 20, 30... pcs | 9,000 |
| 4026206 | Slot stone -N- M8 | 10, 20, 30... pcs | 9,000 |
| 4026221 | Slot stone -R- M6 | 10, 20, 30... pcs | 8,000 |
| 4026222 | Slot stone -R- M8 | 10, 20, 30... pcs | 8,000 |

## Clevis

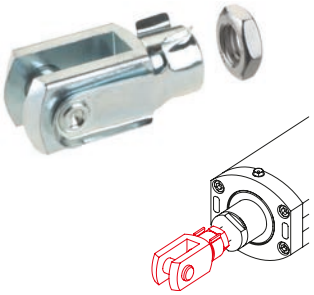

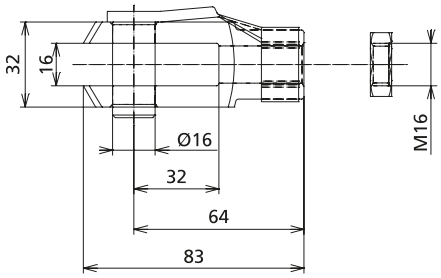


| Code No. | Type |
|---|---|
| QZD050571 | Clevis M16 |

## Bearing block for Clevis

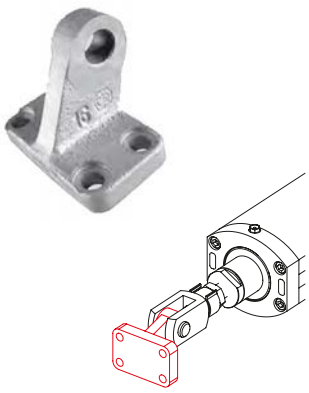

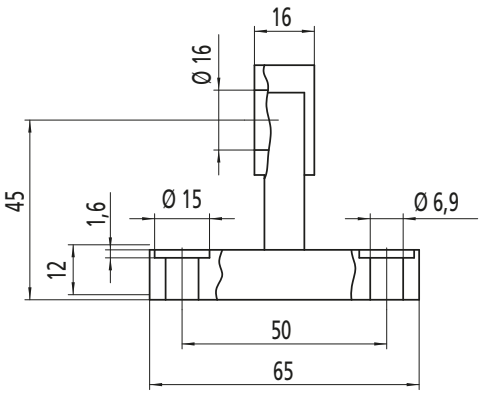


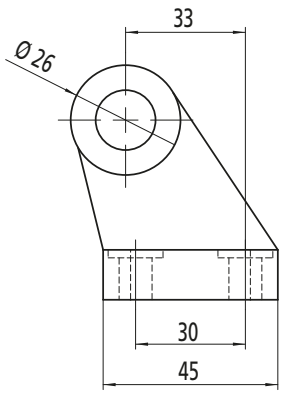


| Code No. | Type | |
|---|---|---|
| QZD050573 | LZ 80 | Bearing block Ø16 |

## Swivel head

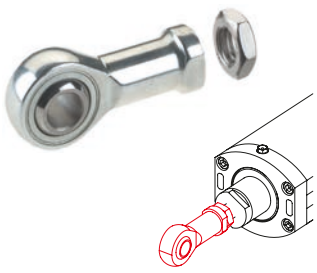

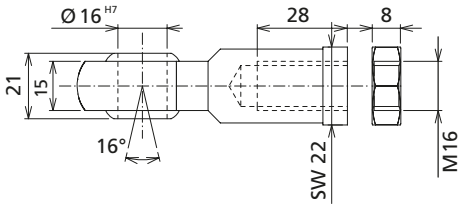


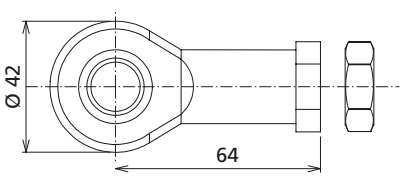


| Code No. | Type | |
|---|---|---|
| QZD050575 | LZ 80 | Swivel head M16 |

## Fork attachment for Swivel head



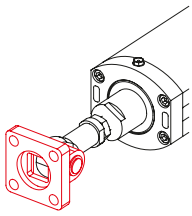

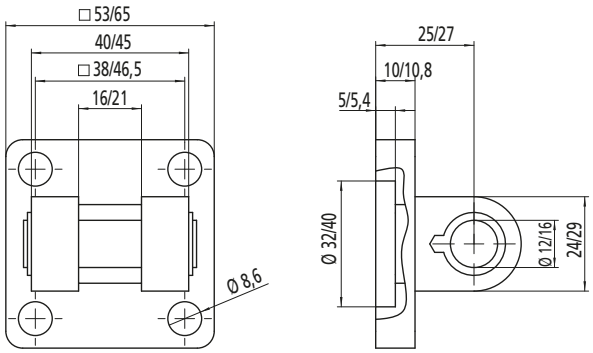


| Code No. | Type | |
|---|---|---|
| QZD050577 | LZ 80 | Fork attachment Ø 16 |

## Swivel



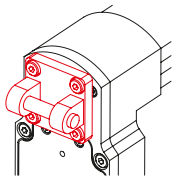

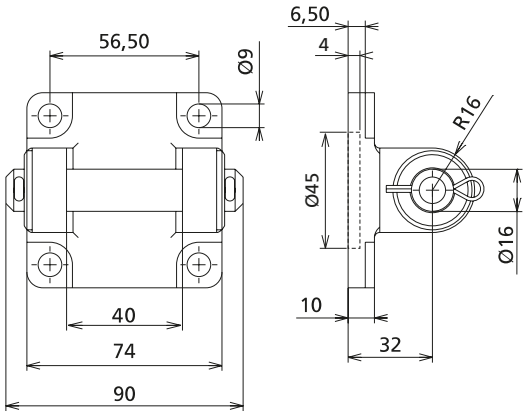


| Code No. | Type |
|---|---|
| QZD050580 | Swivel Ø 16 |

## Bearing block for Swivel



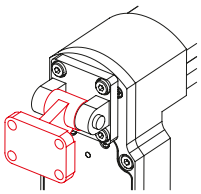

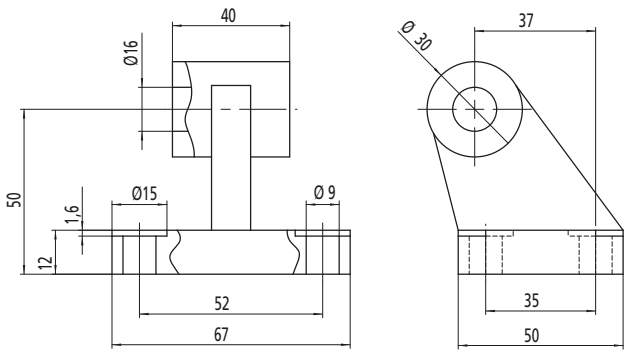


| Code No. | Type | |
|---|---|---|
| QZD050585 | LZ 80 | Swivel head wide Ø 16 |

# LZ 80 – Fixing/Position determination

## Trunnion mounting set

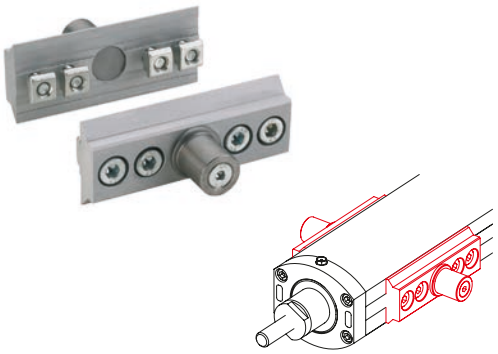

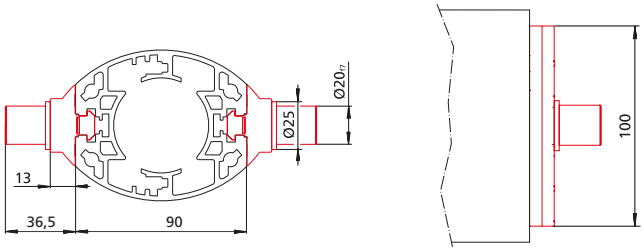


| Code No. | Type |
|---|---|
| QZD050588 | Trunnion mounting set LZ 80 |

## Support blocks for trunnion mounting

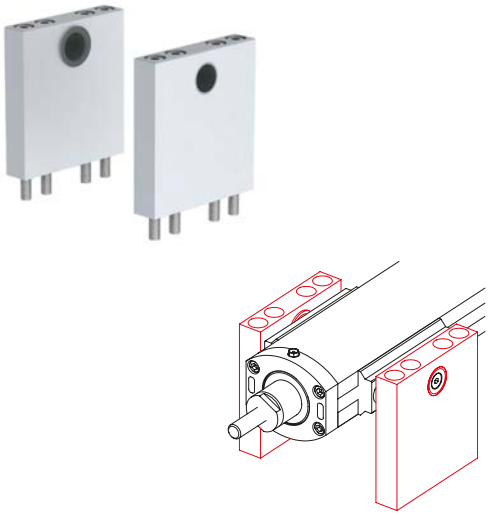

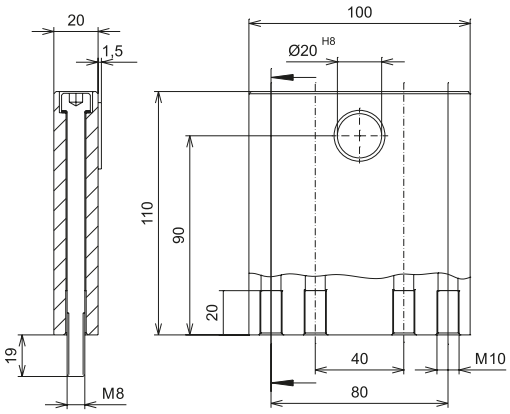


| Code No. | Type |
|---|---|
| QZD050589 | Support blocks LZ 70/80 |

## Magnetic switch



- Signals from the magnetic switch can be collected and evaluated by a customer-provided control unit (such as a PLC).

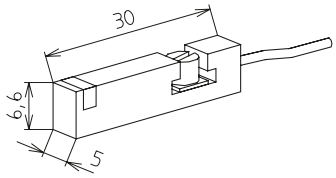


- The switch can be retrofitted in the lateral slot (protected by a cover profile as standard)
- Magnets are integrated in the cylinder as standard.

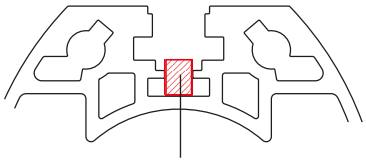


| Code No. | Type |
|---|---|
| QZD050598 | Magnetic switch, NO contact, cable length 6 m |
| QZD050599 | Magnetic switch, NC contact, cable length 5.3 m |

## Magnetic switch – Technical data

| | NC contact | NO contact |
|---|---|---|
| Voltage | 10-30 V DC | 5-30 V DC |
| Current consumption | < 10 mA | < 10 mA |
| Output current | Max. 100 mA | Max. 50 mA |
| Output type | PNP | PNP |
| Function indication | LED | LED |
| Ambient temperature | -25°C to +85°C | -20°C to +70°C |
| Protection class | IP 67 | IP 68 |

## Control requirements

| | |
|---|---|
| Power supply | 24 V DC, at least 500 W |
| Current output | At least 20 A |
| Deceleration | Via generator brakes |
| Brake power | At least 500 W |
| Duty cycle | Up to 100% |
| Motor brake | 24 V DC, at max. 1 A |
| Limit switch evaluation | Upper and lower limit switch (NC contacts) |

**Note:**
Controls available on request.

# Heavy duty cylinder – LZ 70/80 TR PL

## The new generation of industrial linear cylinders

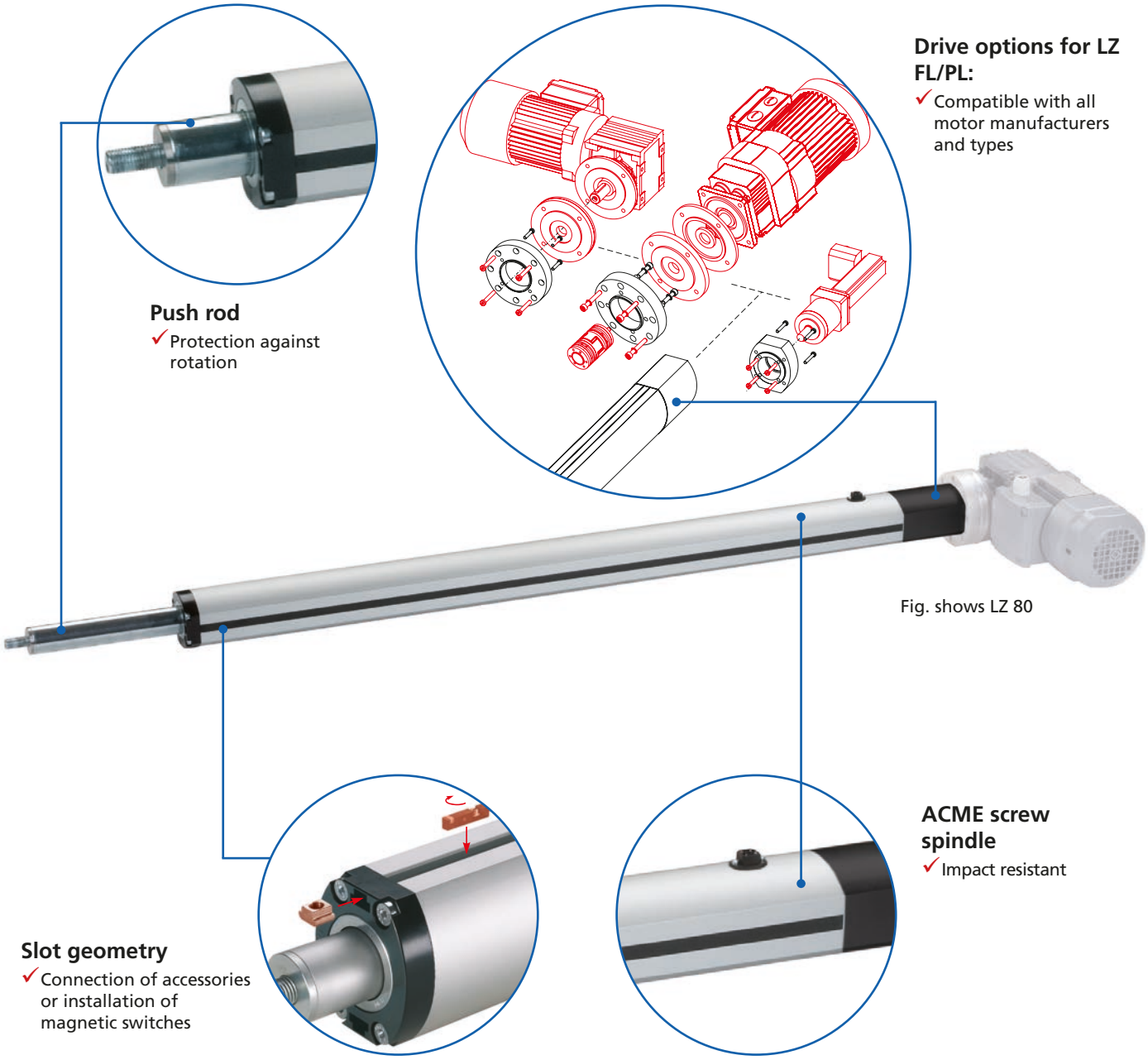

**Drive options for LZ FL/PL:**
✓ Compatible with all motor manufacturers and types

**Push rod**
✓ Protection against rotation

Fig. shows LZ 80

**ACME screw spindle**
✓ Impact resistant

**Slot geometry**
✓ Connection of accessories or installation of magnetic switches

### Features:

- Freely selectable drive (three-phase motor / servo motor / stepper motor)
- Flexible use of space thanks to different motor configurations
- Coverable slot geometry on both sides supports a range of fixing options
- Push rod with rotation locking
- Service life of up to 5 million double strokes (500 mm stroke with KG spindles)
- Protection class IP 54
- Integrated sensors for external magnetic switches

### Options:

- Optional IP 65 can be supplied
- Special stroke lengths available on request
- External magnetic switches
- Angular three-phase motor with fixing boss available on request

# LZ electric cylinders - Table of contents


## Properties/performance data

- General information/operating conditions ... 294
- Power diagram LZ 70 ... 294
- Power diagram LZ 80 ... 295

## Versions
**(Dimensions, order numbers)**

- LZ 70 PL electric cylinder ... 296 - 297
- LZ 80 PL electric cylinder ... 296 - 297

## Accessories

**Fixing**

- Clevis ... 298
- Bearing block for Clevis ... 298
- Swivel head ... 298
- Fork attachment for swivel head ... 299
- Swivel ... 299
- Bearing block for swivel ... 299
- Trunnion mounting set ... 300
- Support blocks for trunnion mounting ... 300
- Slot stone ... 300
- Axial adjustment – RK SyncFlex A ... 301

**Drive**

- Motor adaptor kit ... 302

**Position determination**

- Magnetic switch ... 303

# Technical data – LZ 70/80 TR PL

## General information / operating conditions

**Linear cylinder with ACME screw**
**for robust, versatile moving applications (Move-Tec)**

| Type | LZ 70 PL | LZ 80 PL |
|---|---|---|
| Max. compressive force / tensile force | 5.000 N | 10.000 N |
| Max. driving torque | 20 Nm | 25 Nm |
| Max. speed | 24 / 48 mm/s | 29 mm/s |
| Max. acceleration | 3 m/s² | 3 m/s² |
| Repeatability | ± 0.2 mm | ± 0.2 mm |
| Max. no-load torque | 0.7 Nm | - |
| Drive | ACME screw TR 20x4 / 20x8 | ACME screw TR 24x5 |
| Lead accuracy | ≤ 0.15 mm / 300 mm | ≤ 0.15 mm / 300 mm |
| Duty cycle | S3 30% | S3 20% |
| Ambient temperature | +0°C to +50°C | +5°C to +40°C |
| Degree of protection | IP 54 (optional IP 65) | IP 54 |
| Continuous sound pressure level | ≤ 65 dB (A) | ≤ 65 dB (A) |

## Speed/Force diagram for LZ70 with ACME screw TR 20x4 / TR 20x8

The application of an ACME screw TR 20x8 requires a drive motor with brake.
At 5000N and Stroke >800 mm see Diagram „Maximal Load“ (page 295).

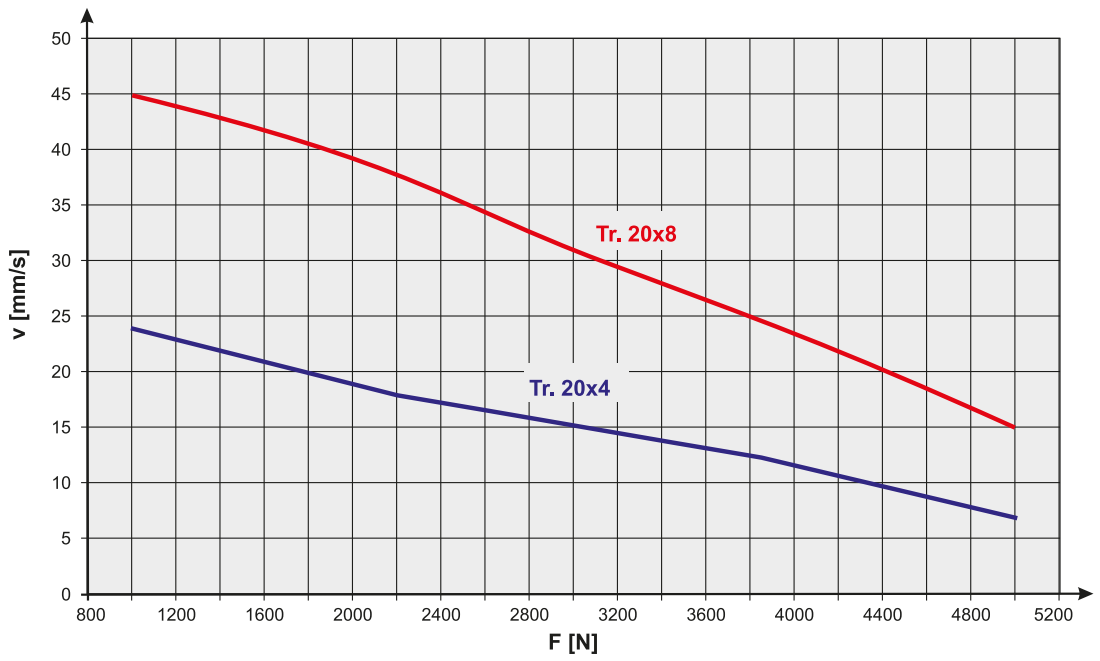

## Maximal Load, Force/Stroke diagram for TR 20x4 / TR 20x8

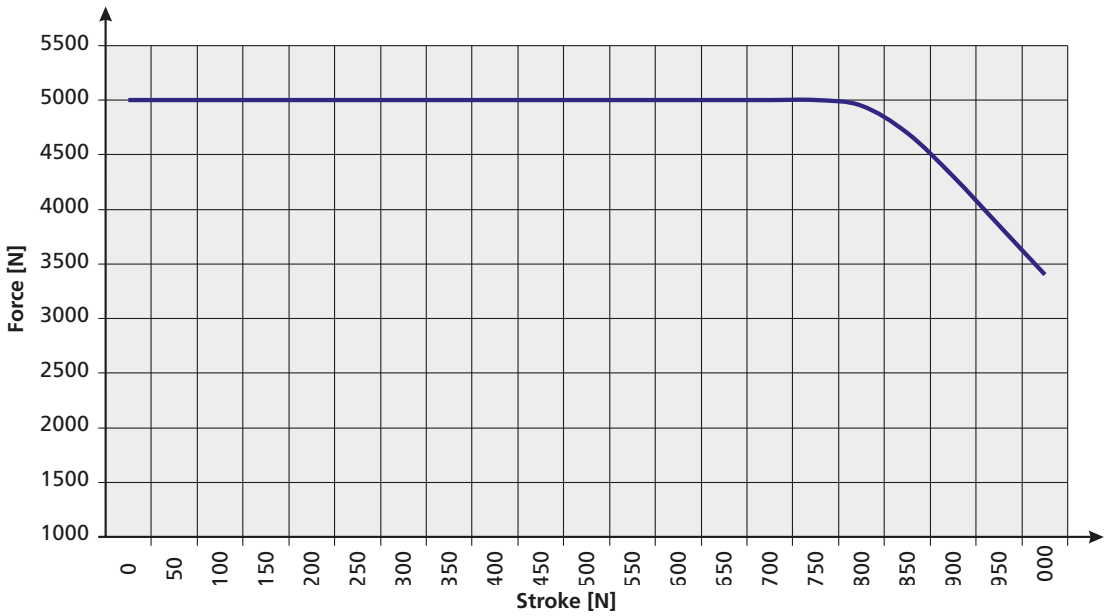


## Speed/Force diagram for LZ80 with ACME screw TR 24x5

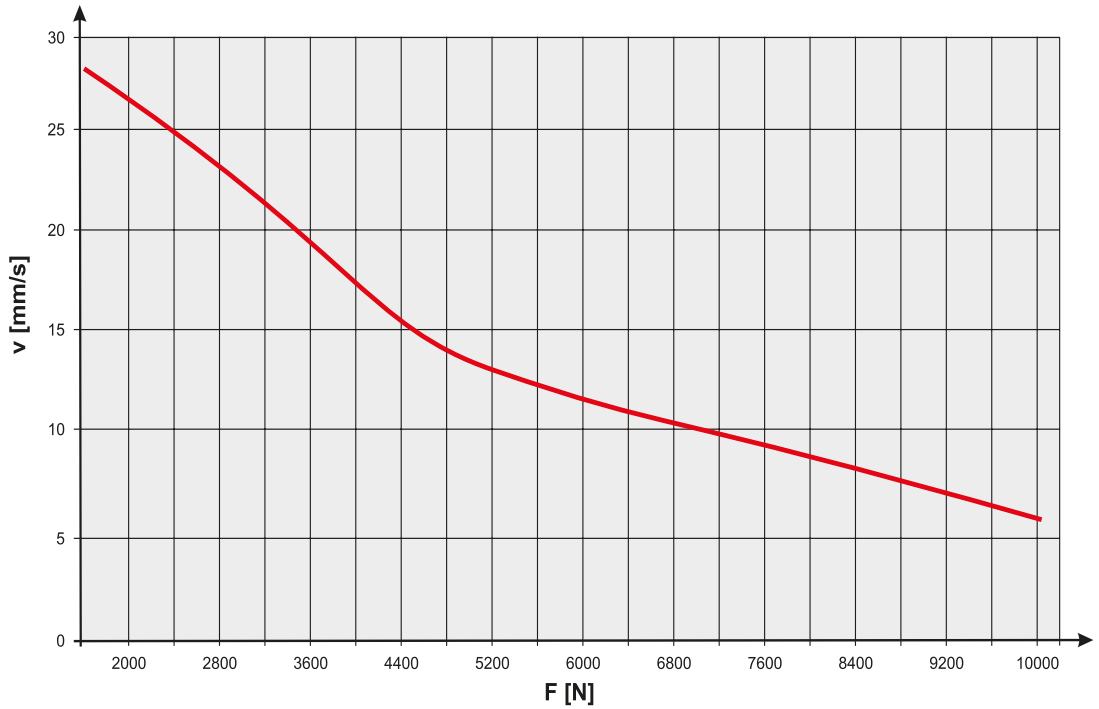

**Order information:**

- Maintenance opening of the LZ 70 can be moved on request
- Integr. position transducer available with the LZ 70 on request

## LZ PL electric cylinder with ACME screw




Fig. shows LZ 70

| Code No. | Type | Spindle | A | B | C | D |
|---|---|---|---|---|---|---|
| TQ1_A2A1D34AA_ _ _ _ | LZ 70 PL | TR 20x4 | 69 | 77 | 44 | 47.6 |
| TQ1_A2A1D37AA_ _ _ _ | | TR 20x8 | 69 | 77 | 44 | 47.6 |

**Stroke [mm]** freely configurable
e.g. 0 3 9 7

**Degree of protection:**
1 = IP 54
3 = IP 65

| Travel | Installation dimension X | Weight [kg] | |
|---|---|---|---|
| | | Basic length | per 100 mm travel |
| 1 to 397 mm | Stroke + 302 mm | 2.5 | 0.7 |
| 398 to 600 mm | Stroke + 339.5 mm | 2.5 | 0.7 |
| 601 to 795 mm | Stroke + 377 mm | 2.5 | 0.7 |
| 796 to 1000 mm | Stroke + 407 mm | 2.5 | 0.7 |

| Code No. | Type | Spindle | A | B | C | D |
|---|---|---|---|---|---|---|
| TQ1_A1A1B11AA_ _ _ _ | LZ 80 PL | TR 24x5 | 80 | 91 | 55 | 48 |

**Stroke [mm]** configurable in 7.5 mm increments
e.g. 0 3 9 7 . 5

**Degree of protection:**
1 = IP 54
3 = IP 65

| Travel | Installation dimension X | Weight [kg] | |
|---|---|---|---|
| | | Basic length | per 100 mm travel |
| 7.5 to 397.5 mm | Stroke + 348.5 mm | 6.5 | 1 |
| 405 to 600 mm | Stroke + 386 mm | 6.5 | 1 |
| 607.5 to 795 mm | Stroke + 423.5 mm | 6.5 | 1 |
| 802.5 to 1005 mm | Stroke + 468.5 mm | 6.5 | 1 |

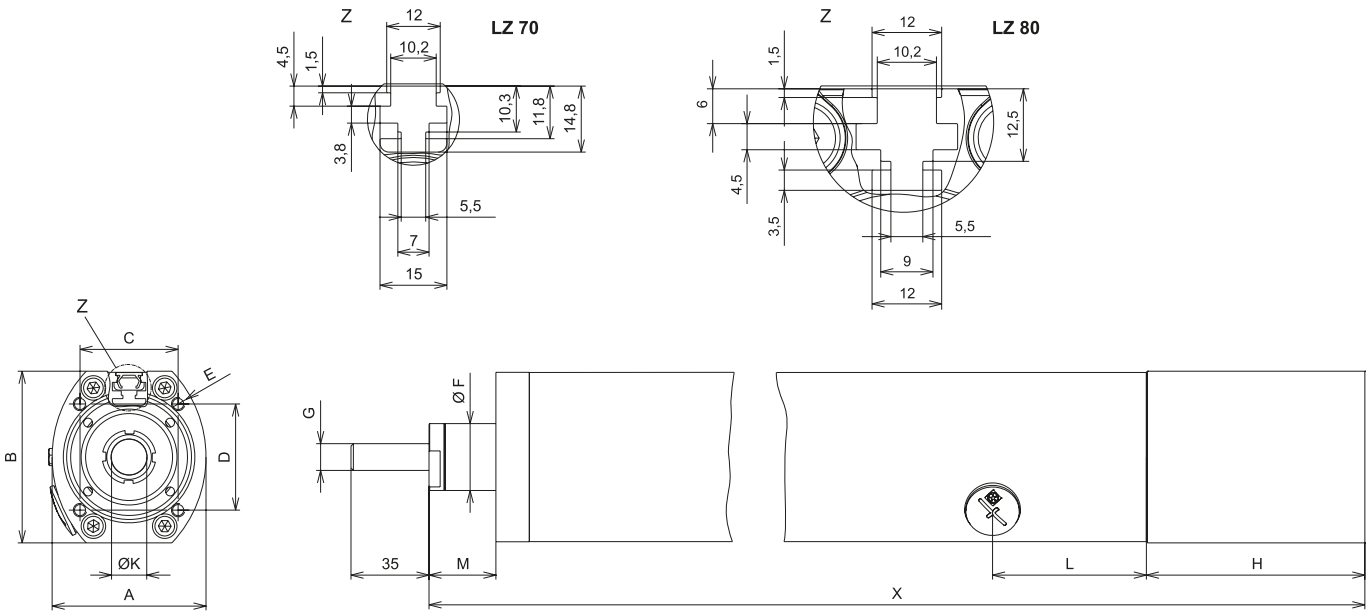


[mm]

| E | F | G | H | K | L | M |
|---|---|---|---|---|---|---|
| M6 | 30 | M12 | 98 | 12 | 69 | 30 |
| M6 | 30 | M12 | 98 | 12 | 69 | 30 |

[mm]

| E | F | G | H | K | L | M |
|---|---|---|---|---|---|---|
| M6 | 40 | M16 | 110 | 15 | Stroke-33 (slot) | 28.2 |

## Clevis

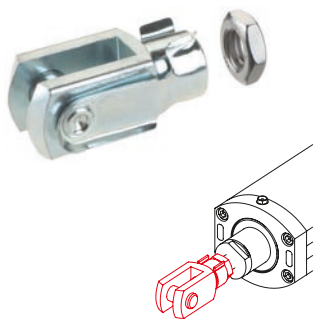

Clevis M12 for LZ 70

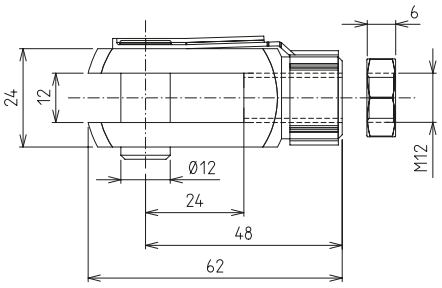


Clevis M12 for LZ 80

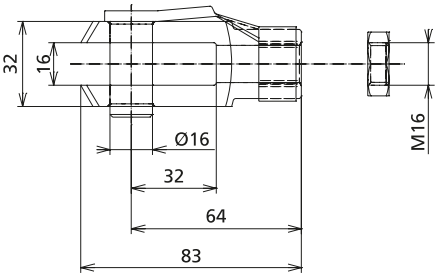


| Code No. | Type | |
|---|---|---|
| QZD050570 | LZ 70 | Clevis M12 |
| QZD050571 | LZ 80 | Clevis M16 |

## Bearing block for Clevis

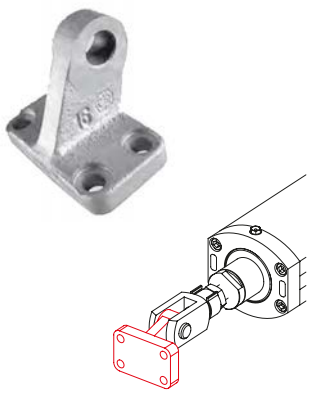

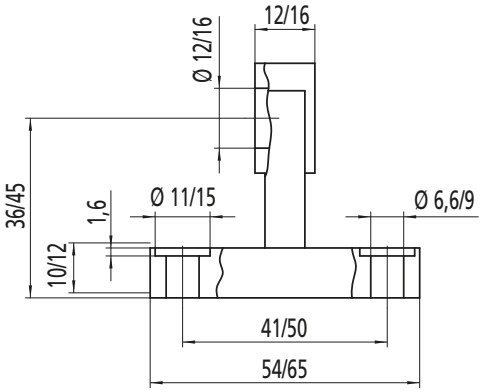


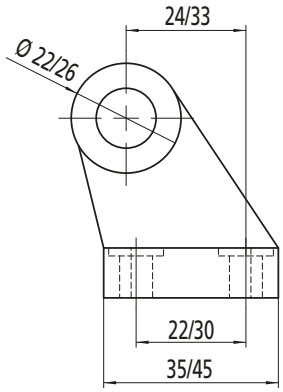


| Code No. | Type | |
|---|---|---|
| QZD050572 | LZ 70 | Bearing block Ø12 |
| QZD050573 | LZ 80 | Bearing block Ø16 |

## Swivel head

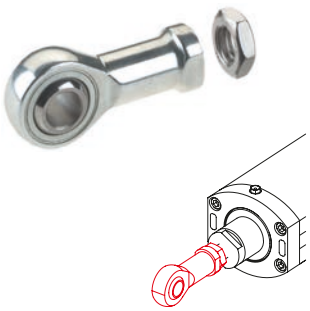

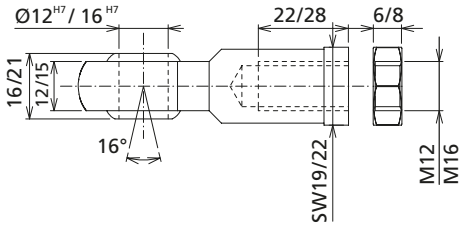


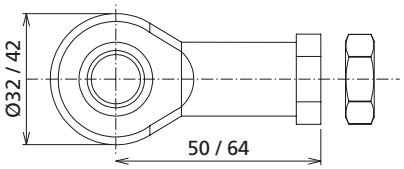


| Code No. | Type | |
|---|---|---|
| QZD050574 | LZ 70 | Swivel head M12 |
| QZD050575 | LZ 80 | Swivel head M16 |

## Fork attachment for Swivel head



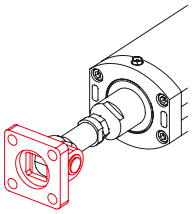

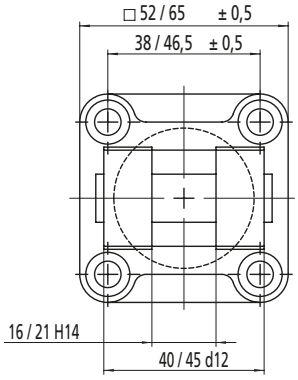


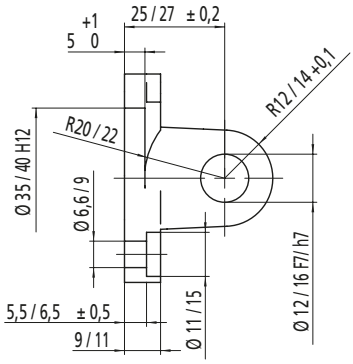


| Code No. | Type | |
|---|---|---|
| QZD050576 | LZ 70 | Fork attachment Ø 12 |
| QZD050577 | LZ 80 | Fork attachment Ø 16 |

## Swivel



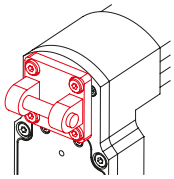

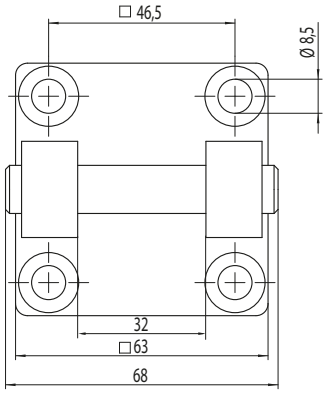


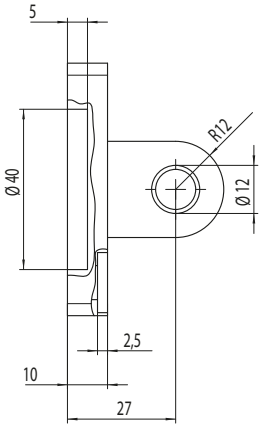


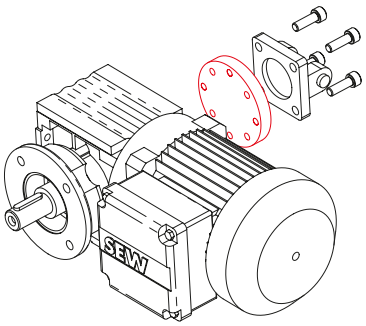


| Code No. | Type | |
|---|---|---|
| QZD050579 | LZ 70 | Swivel Ø 12 |

For use with SEW spiro plan geared motor one of following adaptor plates is needed

| Code No. | Type | |
|---|---|---|
| QZD050581 | LZ 70 | Adaptor plates SEW WF 20 |
| QZD050582 | LZ 70 | Adaptor plates SEW WF 30 |

## Bearing block for Swivel



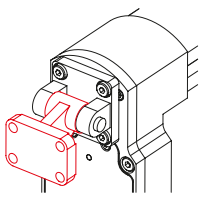

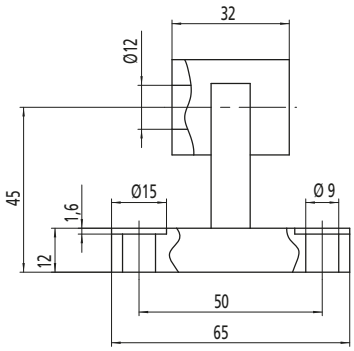


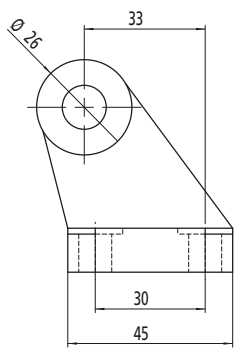


| Code No. | Type | |
|---|---|---|
| QZD050584 | LZ 70 | Bearing block wide Ø 12 |

## Trunnion mounting set



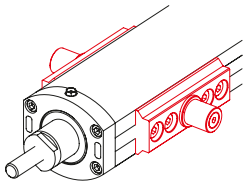

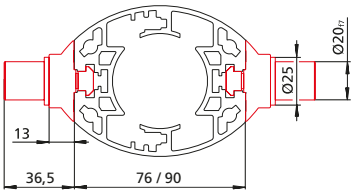


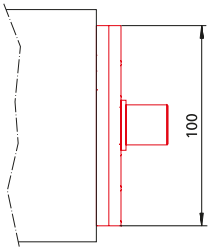


| Code No. | Type |
|---|---|
| QZD050587 | Trunnion mounting set LZ 70 |
| QZD050588 | Trunnion mounting set LZ 80 |

## Support blocks for trunnion mounting



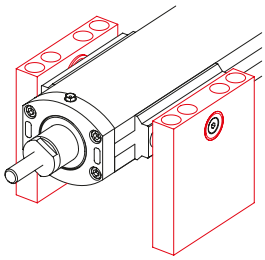

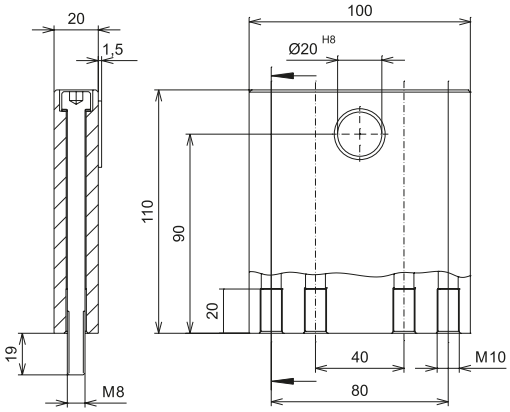


| Code No. | Type |
|---|---|
| QZD050589 | Support blocks LZ 70/80 |

**Order instruction square nut:**

- **Purchase only in lot sizes and a multiple of that, see product table below**

- Slot stones facilitate the attachment of fittings to the cylinder.
- They can be slid into the lateral slots (Type -N-) or swivelled into the slot from above (Type -R-).

## Slot stone



Type -N-



Type -R-

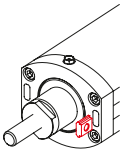

| Code No. | Type | | lot sizes | F [N] |
|---|---|---|---|---|
| 4006201 | LZ 70 | Slot stone -N- M5 | 10, 20, 30... pcs | 4,000 |
| 4006203 | | Slot stone -N- M6 | 10, 20, 30... pcs | 4,000 |
| 4026207 | LZ 80 | Slot stone -N- M5 | 10, 20, 30... pcs | 4,000 |
| 4026203 | | Slot stone -N- M6 | 10, 20, 30... pcs | 9,000 |
| 4026206 | | Slot stone -N- M8 | 10, 20, 30... pcs | 9,000 |
| 4026221 | | Slot stone -R- M6 | 10, 20, 30... pcs | 8,000 |
| 4026222 | | Slot stone -R- M8 | 10, 20, 30... pcs | 8,000 |

## RK SyncFlex A – axial adjustment for LZ 70



**Levelling eye**
- ✓ Eliminates distortions

**Axial adjustment**
- ✓ Compensates manufacturing tolerances
- ✓ Compensates installation tolerances
- ✓ Length compensation -2 mm
- ✓ Reduces commissioning times

**Scope of delivery:**
Axial adjustment, incl. swivel head as depicted

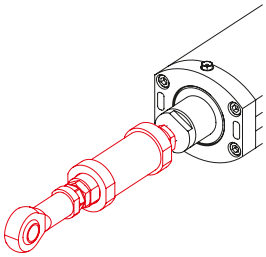

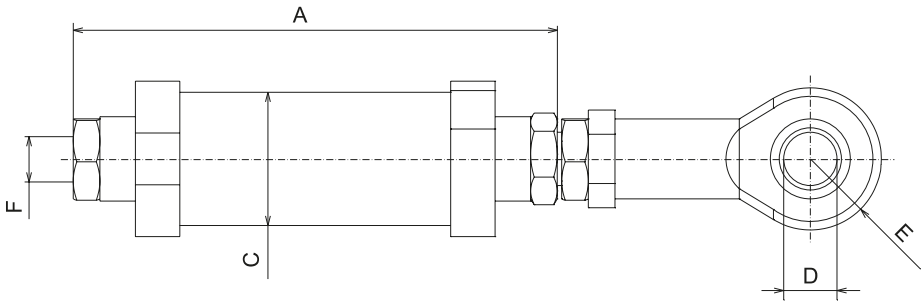




**Note:**
Screw depth 15 mm max.

[mm]

| Code No. | Load | A | C | D | E | F |
|---|---|---|---|---|---|---|
| QZD050590 | 600 N | 102 | Ø30 | Ø12 | R16 | M12 |
| QZD050591 | 1.000 N | 102 | | | | |
| QZD050592 | 2.000 N | 103,5 | | | | |
| QZD050593 | 2.500 N | 109 | | | | |
| QZD050594 | 3.000 N | 107,5 | | | | |
| QZD050595 | 4.000 N | 139,5 | | | | |
| QZD050596 | 5.000 N | 137 | | | | |

## Motor adaptor kit for 3 phase and servo motors

- Servomotors from the RK standard range can be easily connected
- Complete motor adaptor kits manufactured to your specifications on request
- Motor adaptors offer degree of protection IP 54 (IP 65 available on request)

**Scope of delivery:**
Motor adaptor, elastomer coupling and fastenings

### 3 phase motor

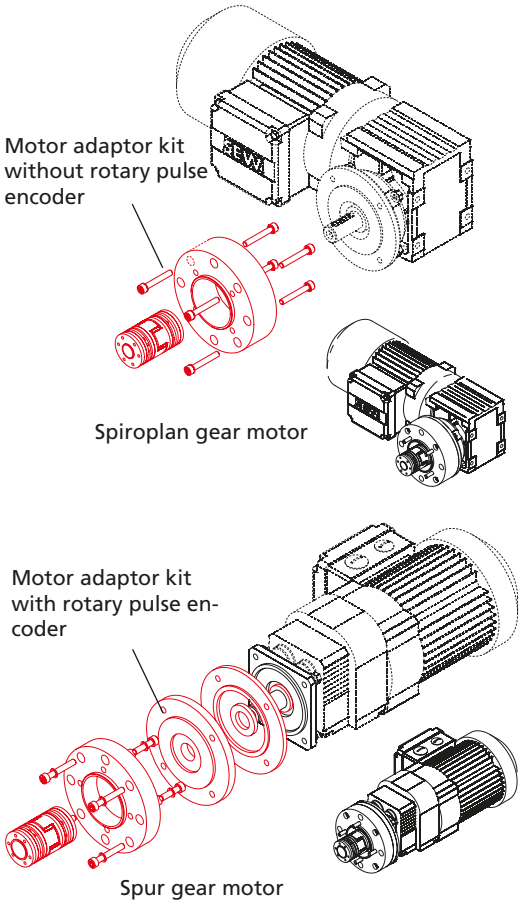


| Code No. | Type | Version |
|---|---|---|
| LZ 70 for 3 phase motor | | |
| 949088 | SEW WF20DR63L2 | with gear |
| | SEW WF20DR63M2 | with gear |
| | SEW WF20DR63S2 | with gear |
| | SEW WF30DRS71M2 | with gear |

| Code No. | Type | Version |
|---|---|---|
| LZ 80 for 3 phase motor | | |
| 949089 | SEW WF20DR63L2 | with gear |
| | SEW WF20DR63M2 | with gear |
| | SEW WF20DR63M4 | with gear |
| | SEW WF30DRS71M2 | with gear |
| | SEW WF30DRS71S4 | with gear |
| | SEW WF30DRS80S2 | with gear |
| 949090 | SEW WF20DR63L2 | with gear and rotary pulse encoder |
| | SEW WF20DR63M2 | with gear and rotary pulse encoder |
| | SEW WF20DR63M4 | with gear and rotary pulse encoder |
| | SEW WF30DRS71M2 | with gear and rotary pulse encoder |
| | SEW WF30DRS71S4 | with gear and rotary pulse encoder |
| | SEW WF30DRS80S2 | with gear and rotary pulse encoder |

Note: Motor adaptor fits all SEW flanges Ø120 with shaft Ø20x40.

### Servo motor

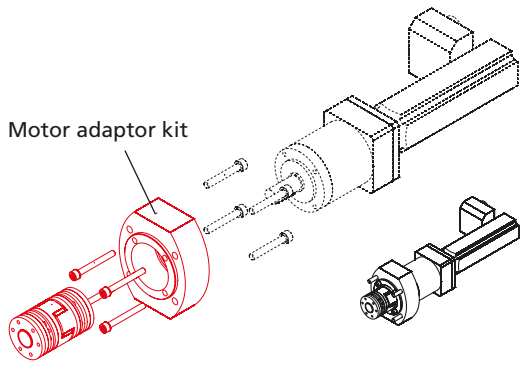


| Code No. | Type | Version |
|---|---|---|
| LZ 70 for servo motor | | |
| 949091 | RK-AC 112 | with PLE 60 gear |
| 949092 | RK-AC 118 | without gear |
| 949093 | RK-AC 240 | without gear |
| 949094 | RK-AC 260 / 280 | with PLE 80 gear |
| 949095 | RK-AC 470 | without gear |

| Code No. | Type | Version |
|---|---|---|
| LZ 80 for servo motor | | |
| 949096 | RK-AC 112 | with PLE 60 gear |

## Magnetic switch

- Signals from the magnetic switch can be collected and evaluated by a customer-provided control unit (such as a PLC).
- The switch can be retrofitted in the lateral slot (protected by a cover profile as standard)
- Magnets are already integrated within the cylinder as standard.



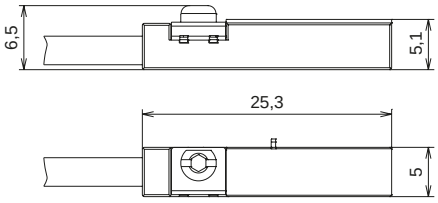


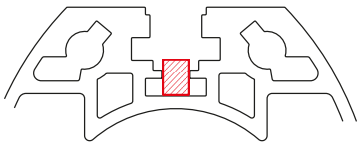

Magnetic switch

### Magnetic switch – Technical data

Extension for magnetic switch

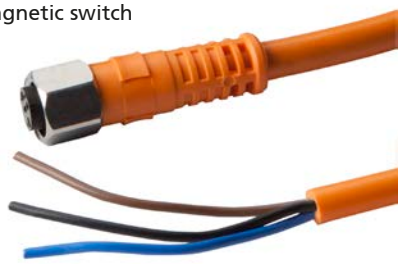

| | NC contact |
|---|---|
| Voltage | 10-30 V DC |
| Current consumption | < 10 mA |
| Output current | Max. 100 mA |
| Output type | PNP |
| Function indication | LED |
| Ambient temperature | -20°C to +70°C |
| Degree of protection | IP 67 |

| Code No. | Type |
|---|---|
| QZD050602 | Magnetic switch, NC contact, incl. extension for magnetic switch, cable length 5,3 m |

LZ 70 with swivel head and trunnion



# Heavy duty cylinder – SLZ 90

## The powerful linear cylinder for precise moving applications up to 25,000 N

SLZ 90 S
With pivot bearing foot,
rod shaped



SLZ 90 P
with pivot bearing foot,
motor parallel



SLZ 90 W
with pivot bearing foot,
motor angled





**SLZ 90 version with fixing boss**



**SLZ 90 version with pivot bearing foot**



**Drive options for SLZ 90**

- ✓ 3-phase motor
- ✓ Servo motor

### Features:

- Choice of drives (3-phase motor/servo motor)
- Flexible use of space due to different motor configurations
- Forces from 10,000 N to 25,000 N
- Coverable slot geometry on both sides supports a range of fixing options for attachments
- Push rod with rotation locking
- Travel up to 2000 mm
- Maintenance-free for entire lifetime of unit
- IP 54
- Self-locking
- Integrated magnets for external magnetic switches

### Options:

- Optional IP 65 can be supplied
- Special stroke lengths available on request
- ACME screw version optionally available with motor brake

# SLZ 90 Electric cylinder - Table of contents


## Properties/Technical data

- General information/operating conditions ... 306

## Versions
(Dimensions, order numbers)

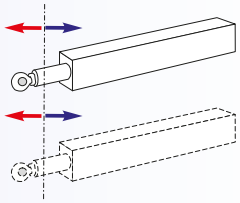

- SLZ 90 electric cylinder with pivot bearing foot and fixing boss:

SLZ 90 S ..... 308 - 309

SLZ 90 P ..... 310 - 312

SLZ 90 W ..... 314 - 316

## Accessories

**Fixing**

- Slot stone -R- ..... 317

**Position determination**

- Magnetic switch ..... 317

# SLZ 90 – Technical data

## General information/operating conditions

| Type | SLZ 90 with ACME screw for moving applications | | |
|---|---|---|---|
| | SLZ 90 S | SLZ 90 P | SLZ 90 W |
| Push force/Pull force | 24,000 N | 14,000 N | 25,000 N |
| Self-locking (via motor brake) | 25,000 N | 25,000 N | 25,000 N |
| Max. speed | 77 mm/s | 77 mm/s | 23 mm/s |
| Design | Linear cylinder with ACME screw 26 x 5 or 36 x 6 | | |
| Guide | Double bearing provided by slide bushes | | |
| Installation position | Any position, without shear forces | | |
| Ambient temperature | -20°C to +70°C | | |
| Repeatability | ± 0.3 mm | | |
| Duty cycle (at max. load) | 25% (2.5 mins operating time; 7.5 mins rest time/depending on sizing, up to 40% duty cycle possible) | | |
| Voltage | 230/400 V AC | | |
| Current consumption (max. starting current) | depending on motor selection | | |
| Power input | depending on motor selection, up to 1.5 KW | | |
| Protection class | IP 54 (optional IP 65) | | |

The data refers to a three-phase motor 230/400 V AC, 50 Hz,
different performance data available on request.

## Connecting slots - guide profile



Slot for magnetic switch, see page 317



Slot for accessory attachment
(30 BLOCAN® slot geometry)

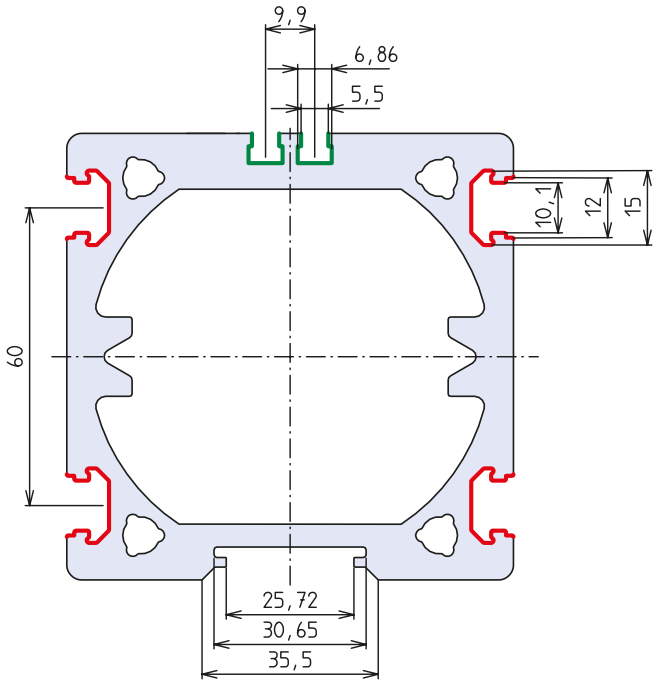



Adjustment of maintenance platform via SLZ 90 heavy duty cylinders.

# SLZ 90 S – Versions

**Order information:**

- Longer stroke lengths on request
- Other speeds and motors available on request

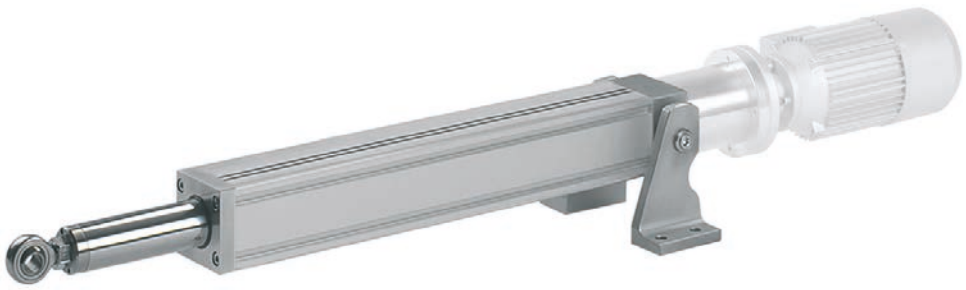

## SLZ 90 S versions with ACME screw

| Code No. | Type | Max. force F [N] | Max. speed [mm/s] | Max. stroke [mm] | Output [kW] | Motor selection |
|---|---|---|---|---|---|---|
| ACME screw 36 x 6 | | | | | | without motor brake |
| TQ21A1S23_2_A_ _ _ _ | SLZ 90 S | 25,000 | 10 | 1,100 | 0.75 | RF17DRN80M4 |
| | | | | | | with motor brake |
| TQ21A1S22_2_A_ _ _ _ | SLZ 90 S | 5,000 | 63 | 2,000 | 1.1 | RF17DRN80M2/BE1 |

Stroke length

Installation position of terminal box

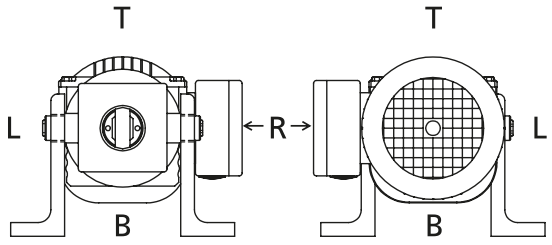


All diagrams show the terminal box in the R position

1 = M1 4 = M4
2 = M2 5 = M5
3 = M3 6 = M6

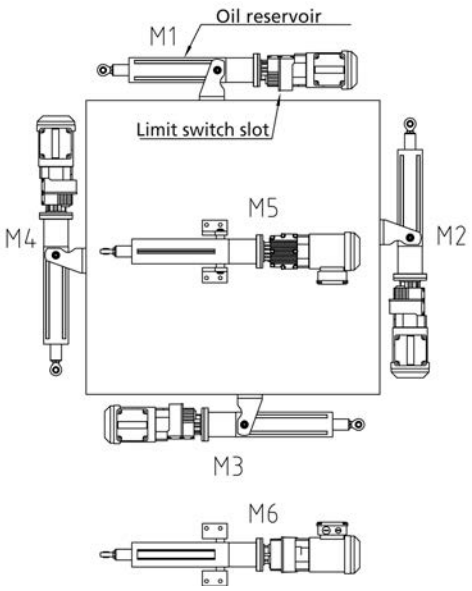

RK ROSE+KRIEGER

## Version with pivot bearing foot

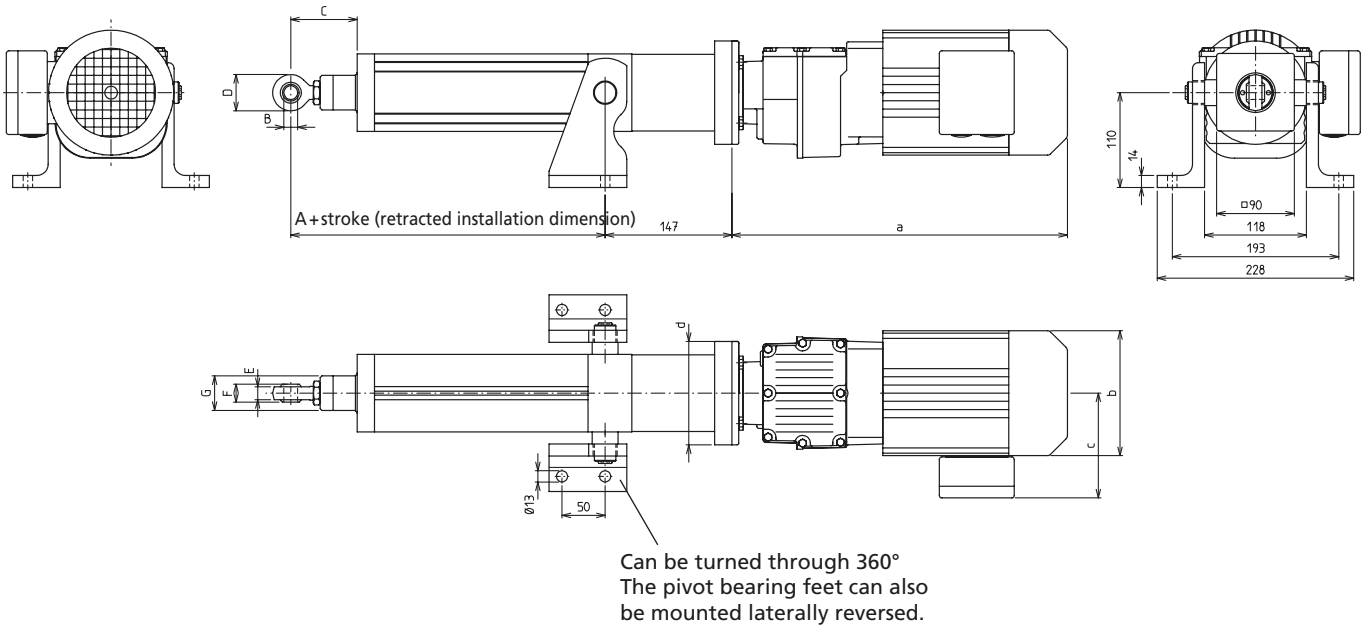


Can be turned through 360°
The pivot bearing feet can also
be mounted laterally reversed.

[mm]

| 3-phase motors | a | b | c | d | Weight [kg] |
|---|---|---|---|---|---|
| RF17DRN80M4 | 410 | Ø156 | 128 | Ø120 | 17 |
| RF17DRN80M2/BE1 | 491 | | 139 | | 20 |

| Type | A | B | C | D | E | F | G | Weight [kg] | |
|---|---|---|---|---|---|---|---|---|---|
| | | | | | | | | Basic length (dimension A) | Additional weight/100 mm |
| Tr 36x6 | 245 | Ø20 | 113 | 50 | 18 | 25 | Ø50 | 12.0 | 2.0 |

# SLZ 90 P – Versions

**Order information:**

- Longer stroke lengths on request
- Other speeds and motors available on request

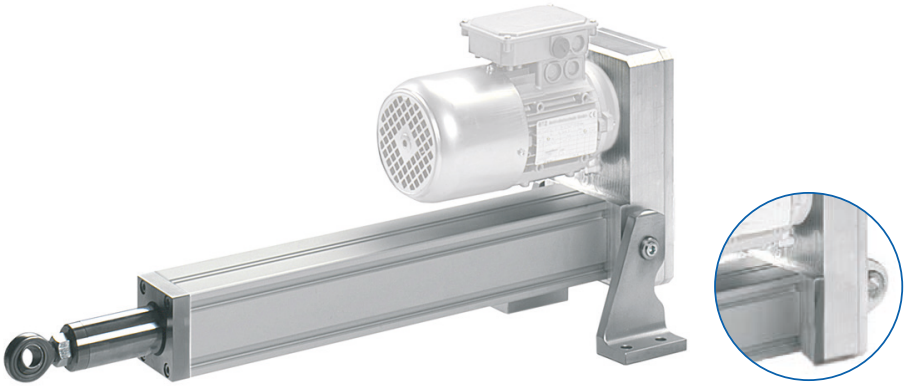

## SLZ 90 P versions with ACME screw

| Code No. | Type | Max. force F [N] | Max. speed [mm/s] | Max. stroke [mm] | Output [kW] | Motor selection |
|---|---|---|---|---|---|---|
| ACME screw 26 x 5 | | | | | | without motor brake |
| TQ21A1P_3_2_A_ _ _ _ | SLZ 90 P | 25,000 | 10 | 1,100 | 0.75 | RF17DRN80M4 |
| | | | | | | with motor brake |
| TQ21A1P_2_2_A_ _ _ _ | SLZ 90 P | 5,000 | 63 | 2,000 | 1.1 | RF17DRN80M2/BE1 |

Stroke length

Installation position of terminal box

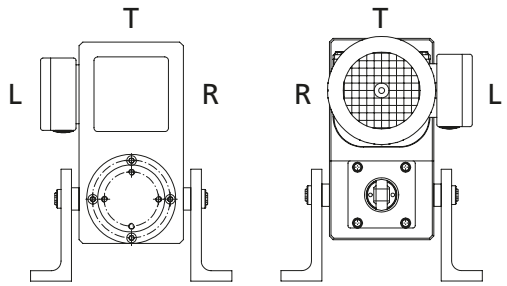


Connection versions

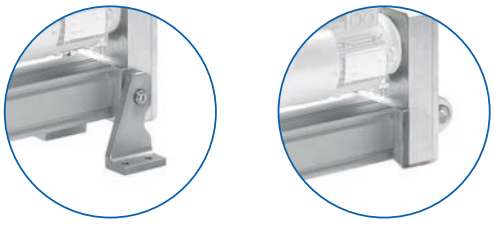

2 = pivot bearing

3 = fixing boss

All diagrams show the terminal box in the L position

1 = M1 4 = M4
2 = M2 5 = M5
3 = M3 6 = M6

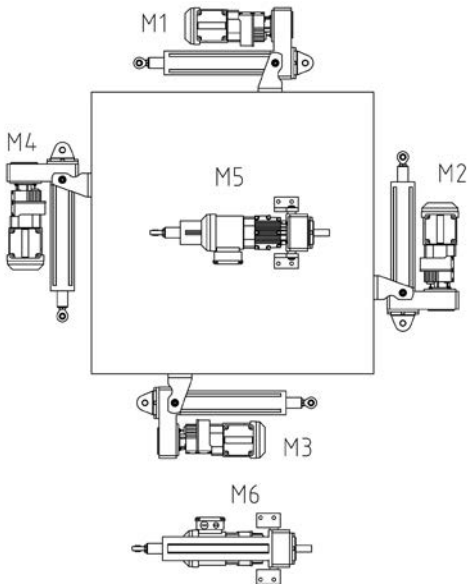

## Version with pivot bearing foot

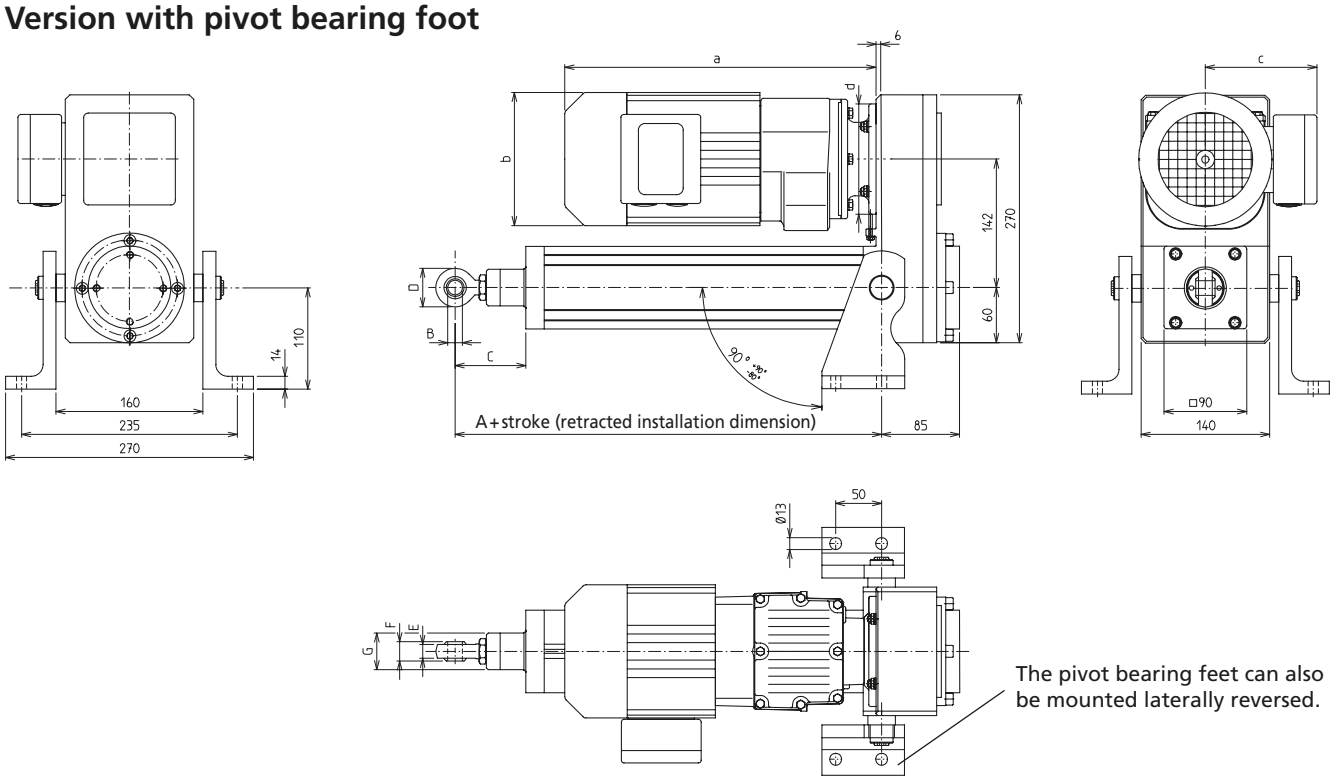


The pivot bearing feet can also be mounted laterally reversed.

[mm]

| 3-phase motors | a | b | c | d | Weight [kg] |
|---|---|---|---|---|---|
| RF17DRN80M4 | 410 | Ø156 | 128 | Ø120 | 17 |
| RF17DRN80M2/BE1 | 491 | | 139 | | 20 |

| Type | A | B | C | D | E | F | G | Weight [kg] | |
|---|---|---|---|---|---|---|---|---|---|
| | | | | | | | | Basic length (dimension A) | Additional weight/ 100 mm |
| Tr 36x6 | 245 | Ø20 | 113 | 50 | 18 | 25 | Ø50 | 13.1 | 2.0 |

# SLZ 90 P – Versions

## Version with fixing boss

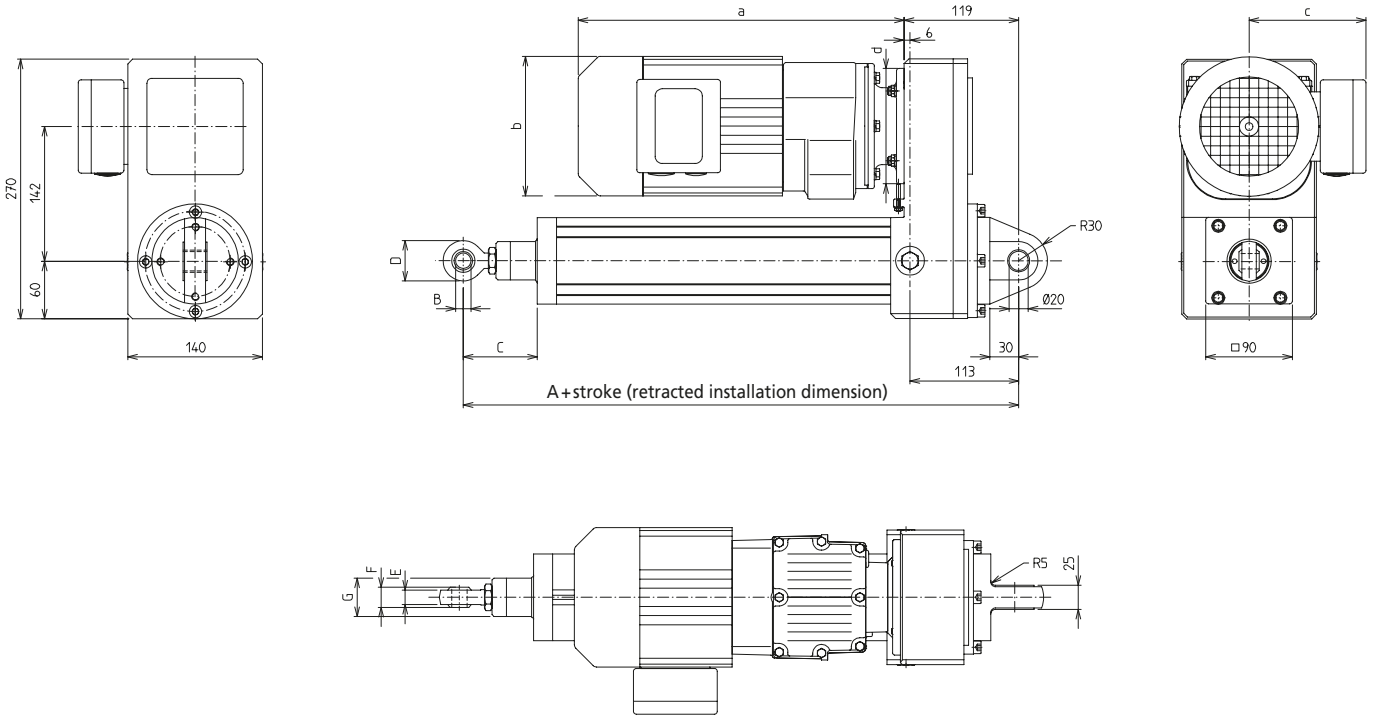


[mm]

| 3-phase motors | a | b | c | d | Weight [kg] |
|---|---|---|---|---|---|
| RF17DRN80M4 | 410 | Ø156 | 128 | Ø120 | 17 |
| RF17DRN80M2/BE1 | 491 | | 139 | | 20 |

| Type | A | B | C | D | E | F | G | Weight [kg] | |
|---|---|---|---|---|---|---|---|---|---|
| | | | | | | | | Basic length (dimension A) | Additional weight/ 100 mm |
| Tr 36x6 | 358 | Ø20 | 113 | 50 | 18 | 25 | Ø50 | 11.3 | 2.0 |



Adjustment of maintenance platform via SLZ 90 heavy duty cylinders.

# SLZ 90 W – Versions

**Order information:**

- Longer stroke lengths on request
- Other speeds and motors available on request

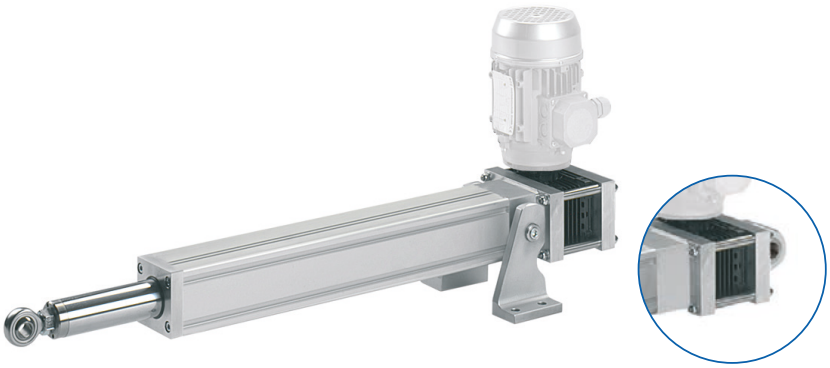

## SLZ 90 W versions with ACME screw

| Code No. | Type | Max. force F [N] | Max. speed [mm/s] | Max. stroke [mm] | Output [kW] | Motor selection |
|---|---|---|---|---|---|---|
| ACME screw 36 x 6 | | | | | | without motor brake |
| TQ21A1W_3_2_A_ _ _ _ | SLZ 90 W | 22,000 | 7 | 1,300 | 0.55 | DRS71M4/FT |
| TQ21A1W_1_2_A_ _ _ _ | SLZ 90 W | 25,000 | 18 | 1,200 | 1.5 | DRN90L4/FT |

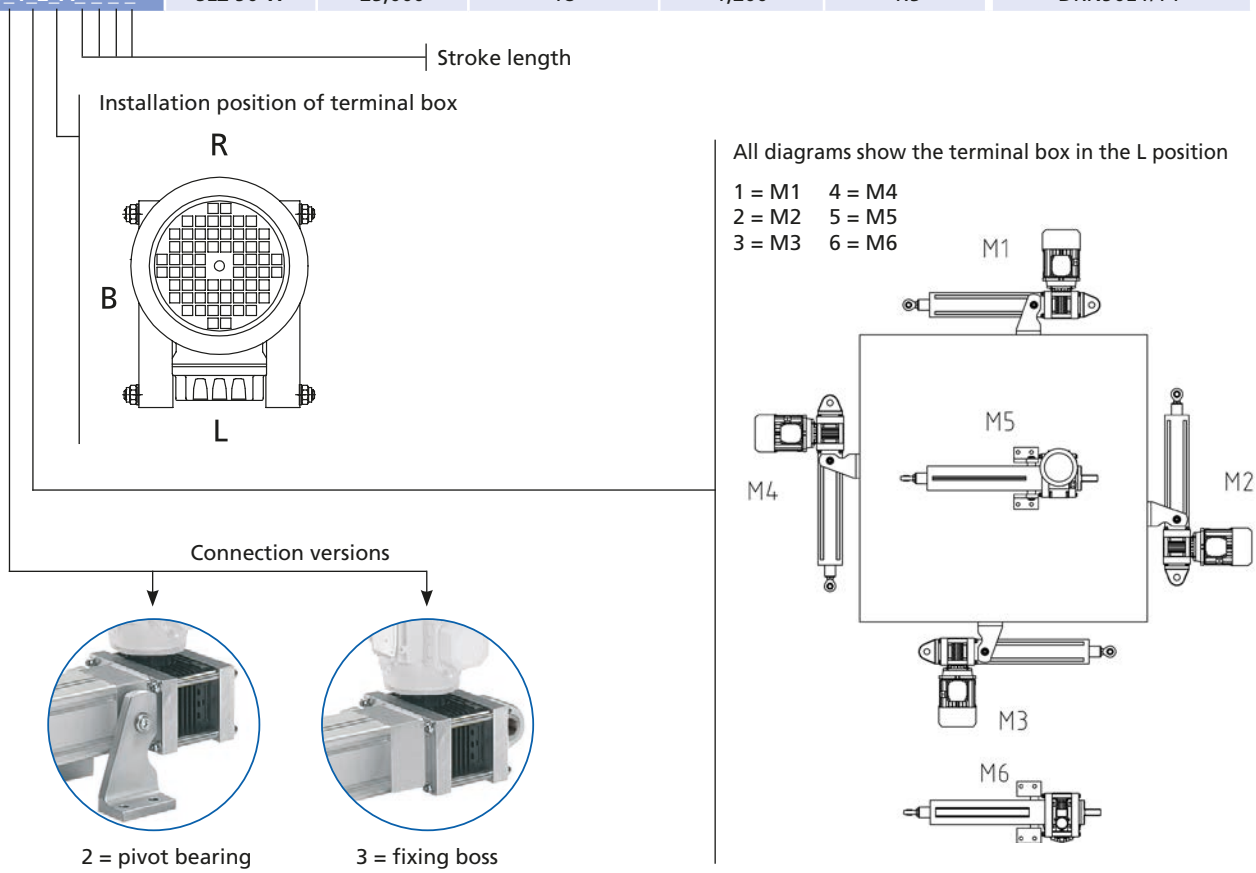

## Version with pivot bearing foot

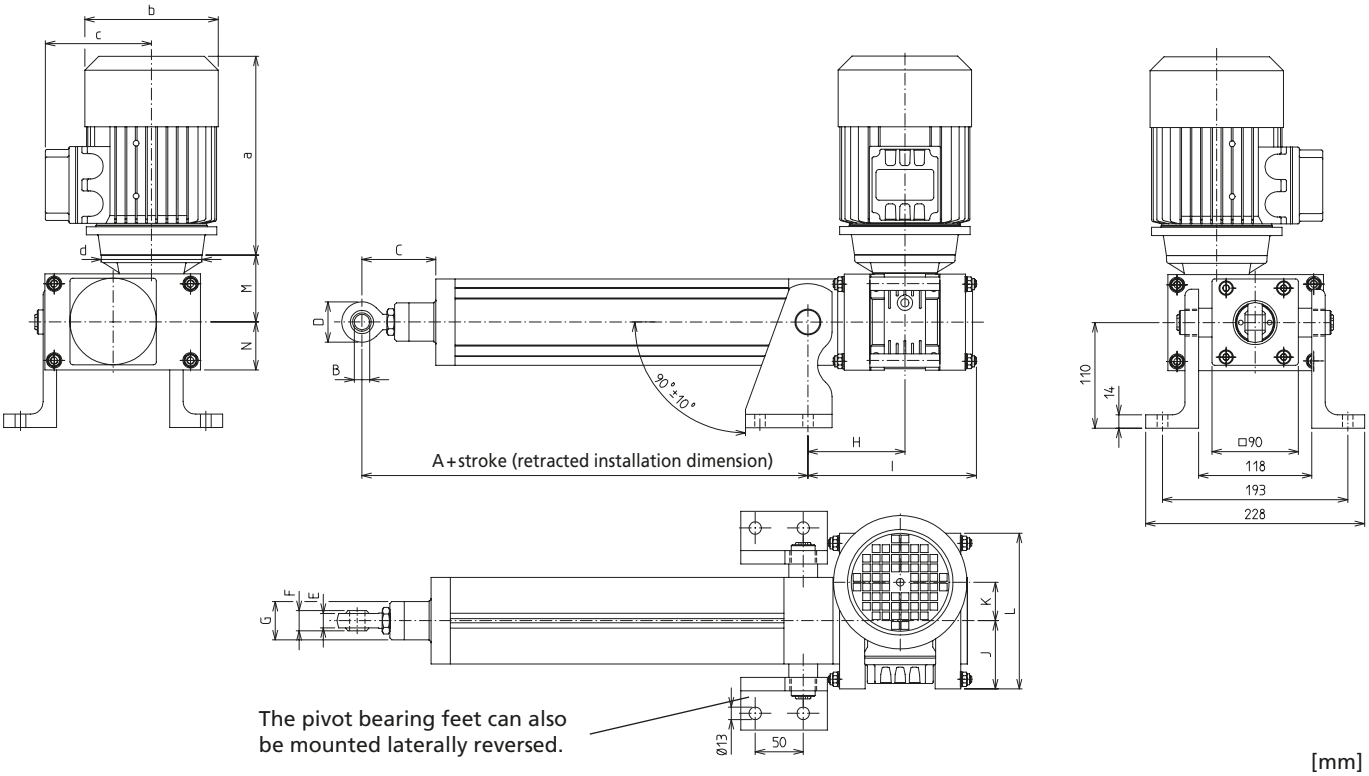


The pivot bearing feet can also be mounted laterally reversed.

[mm]

| 3-phase motors | a | b | c | d | Weight [kg] |
|---|---|---|---|---|---|
| DRS71M4/FT | 223 | Ø139 | 119 | Ø120 | 9 |
| DRN90L4/FT | 313 | Ø179 | 140 | Ø140 | 23 |

| Type | A | B | C | D | E | F | G | H | I | J | K | L | M | N | Weight [kg] | |
|---|---|---|---|---|---|---|---|---|---|---|---|---|---|---|---|---|
| | | | | | | | | | | | | | | | Basic length (dimension A) | Additional weight/ 100 mm |
| Tr 36x6 | 245 | Ø20 | 113 | 50 | 18 | 25 | Ø50 | 117.5 | 212 | 98 | 63 | 231.5 | 109 | 72 | 21.7 | 2.0 |

# SLZ 90 W – Fixing/Position determination

## Version with fixing boss

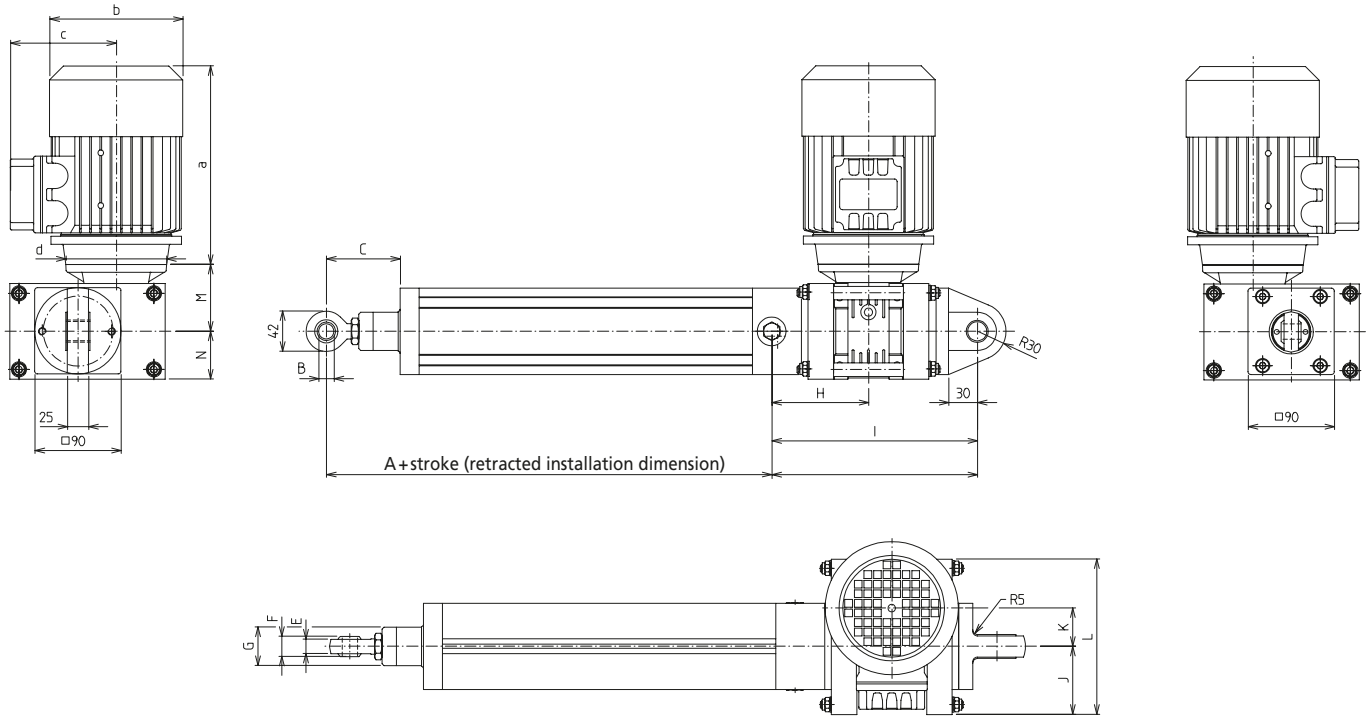


[mm]

| Three-phase motors | a | b | c | d | Weight [kg] |
|---|---|---|---|---|---|
| DRS71M4 / FT | 223 | Ø139 | 119 | Ø120 | 9 |
| DRN90L4 / FT | 313 | Ø179 | 140 | Ø140 | 23 |

| Type | A | B | C | D | E | F | G | H | I | J | K | L | M | N | Weight [kg] | |
|---|---|---|---|---|---|---|---|---|---|---|---|---|---|---|---|---|
| | | | | | | | | | | | | | | | Basic length (dimension A) | Additional weight/ 100 mm |
| Tr 36x6 | 493 | Ø20 | 113 | 50 | 18 | 25 | Ø50 | 117.5 | 248 | 98 | 63 | 231.5 | 109 | 72 | 19.9 | 2.0 |

**Order instruction square nut:**

- **Purchase only in lot sizes and a multiple of that, see product table below**

- Slot stones facilitate the fitting of attachments to the cylinder. To this end, they can be swivelled into the slot from above (Type -R-).

## Slot stone -R-

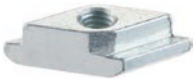

Type -R-

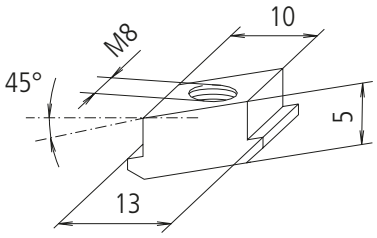


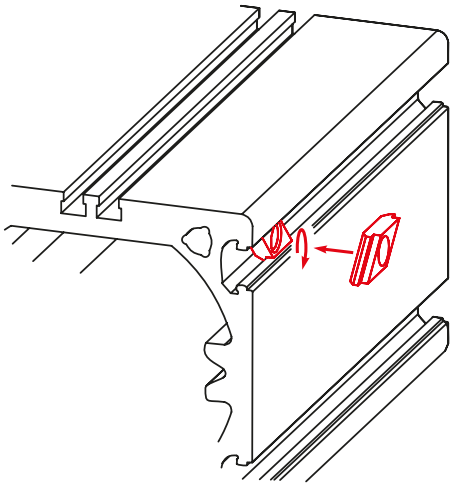

| Code No. | Type | lot sizes | F [N] |
|---|---|---|---|
| 4006223 | Slot stone -R- M8 | 10, 20, 30... pcs | 4,000 |

## Magnetic switch

- Signals from the magnetic switch can be collected and evaluated by a customer-provided control unit (such as a PLC).
- The switch can be retrofitted in the lateral slot (protected by a cover profile as standard)



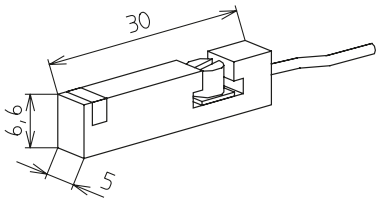


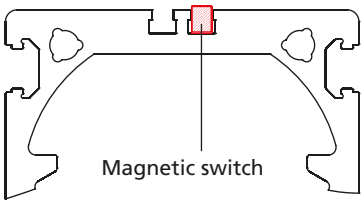


| Code No. | Type |
|---|---|
| QZD050599 | Magnetic switch, NC contact*, cable length 5.3 m |

*Magnetic switch, NO contact, available on request

### Magnetic switch – Technical data

| | NC contact |
|---|---|
| Voltage | 10-30 V DC |
| Current consumption | < 10 mA |
| Output current | Max. 100 mA |
| Output type | PNP |
| Function indication | LED |
| Ambient temperature | -25°C to +85°C |
| Protection class | IP 67 |

# Place-Tec

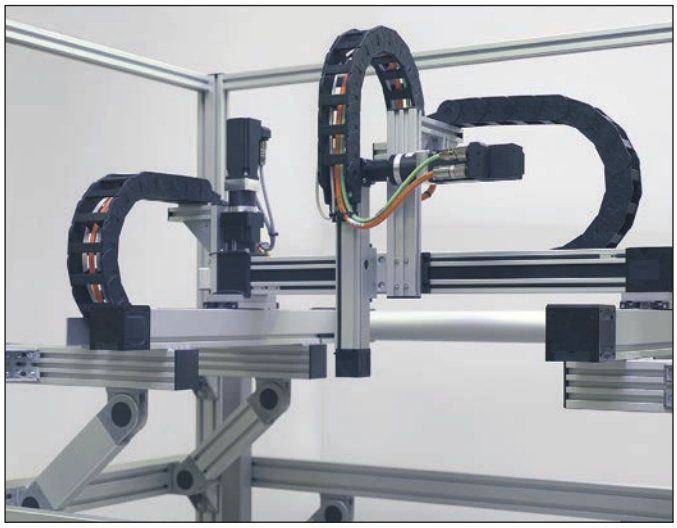



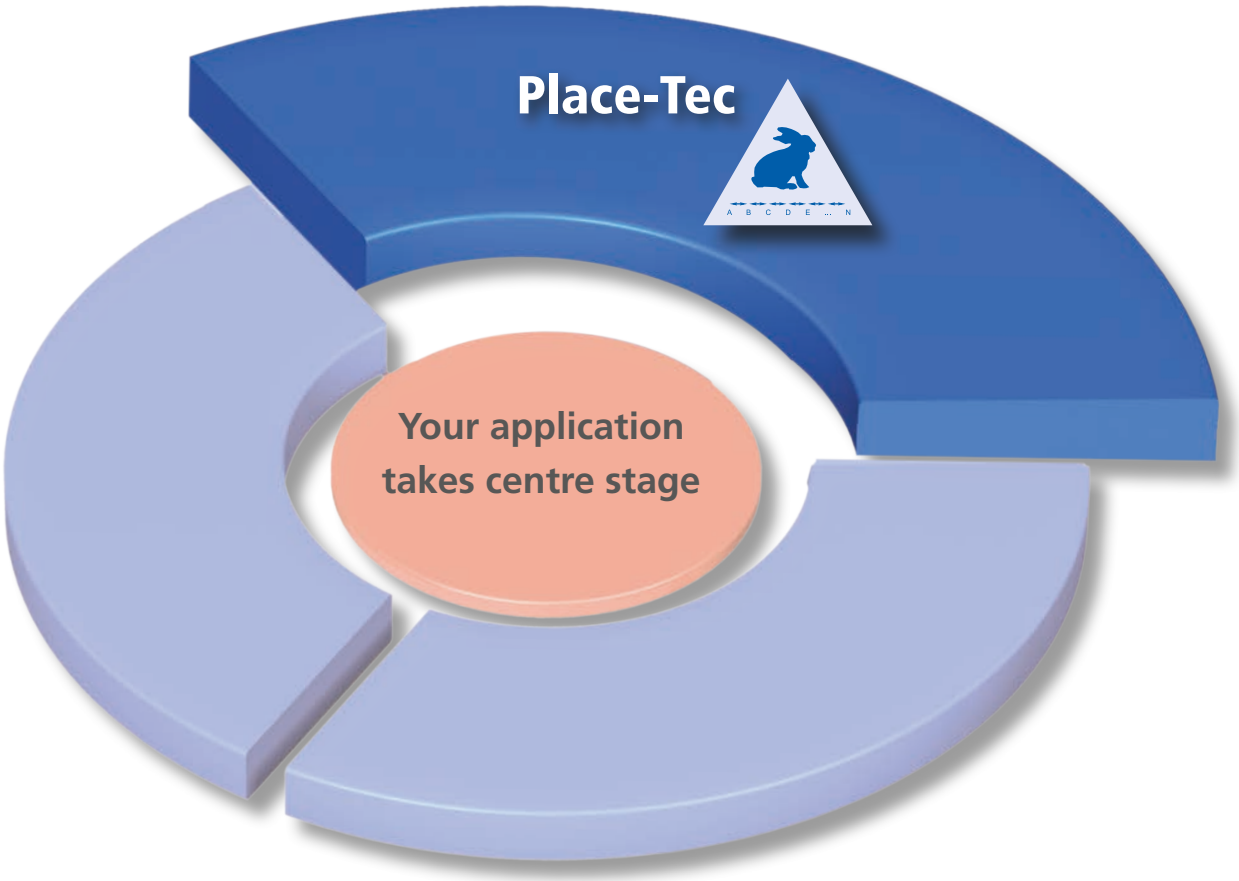


**Place-Tec features:**

- ✓ High cycle rates
- ✓ 3 shift operation
- ✓ Short cycle times
- ✓ High reliability
- ✓ High repeatability



RK ROSE+KRIEGER

## Loading and unloading, palletising, pick & place


Rodless style ..... Page 322 - 409

Rodstyle ..... Page 424 - 443


# Place-Tec

# Place-Tec overview

## Rodless style | Drive + Guide

The “max.” data refer to the smallest/largest sizes

**Roller guide actuators/guides**

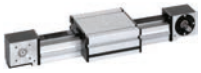
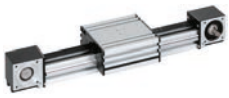
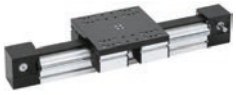

| | PLZ<br>from page 322 | SQZ<br>from page 348 | LMZ<br>from page 366 |
|---|---|---|---|
| Size | 30, 40, 50, 60, 80 | 30, 40, 60, 80 | 100 |
| Max. travel | 4590-5788 mm | 5788-5898 mm | 5700 mm |
| Fx max. | 140-2810 N | 160-2810 N | 3400 N |
| Fy max. | 790-2550 N | 790-2500 N | 7000 N |
| Fz max. | 790-2550 N | 790-2550 N | 7000 N |
| Mx max. | 14-124 Nm | 14-124 Nm | 441 Nm |
| My max. | 20-168 Nm | 20-168 Nm | 609 Nm |
| Mz max. | 22-169 Nm | 22-169 Nm | 609 Nm |
| Timing-belt | ● | ● | ● |
| Timing-belt<br>2 contradirectional carriages | ● | | |
| Guide without drive | ● | ● | ● |
| Features | ✓Roller guide paired with wide timing-belt | ✓Timing-belt unit with optimum connecting options via slots in the guide profile/carriage | ✓Robust linear actuators that enable high moments and forces |

## Rodstyle | Drive + Guide

The “max.” data refer to the smallest/largest sizes

**Roller guide actuators**




| | SQ-II MT<br>from page 424 | SQ-II ZST<br>from page 436 |
|---|---|---|
| Size | 30, 40, 50, 60, 80 | 60, 80 |
| Max. travel | 3722-17476 mm | 29530 mm |
| Fx max. | 480-3200 N | Motor-dependent |
| Fy max. | 1000-5000 N | 2550 N |
| Fz max. | 1200-6000 N | 2550 N |
| Mx max. | 48-380 Nm | 99-124 Nm |
| My max. | 70-430 Nm | 171-201 Nm |
| Mz max. | 60-370 Nm | 171-201 Nm |
| Features | ✓Timing-belt unit for large stroke lengths | ✓Rack unit for large strokes up to 30 m |

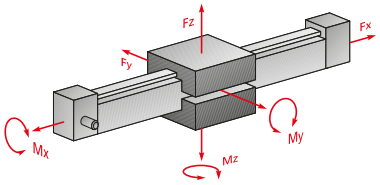


| | |
|---|---|
| Length/Strokes | [mm] |
| Forces | [N] |
| Moments | [Nm] |

## Ball rail actuators/guides

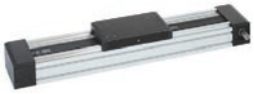



| MultiLine<br>from page 378 | RK DuoLine Z<br>from page 412 |
|---|---|
| 200 | 60, 80, 120,160 |
| 5620 mm | 5753-9010 mm |
| 4700 N | 900-6000N |
| 8200 N | 700-5100 N |
| 12000 N | 2500-8900 N |
| 920 Nm | 48-500 Nm |
| 1600 Nm | 250-1200 Nm |
| 1500 Nm | 220-1150 Nm |
| • | • |
| | |
| • | • |
| ✓Compact ball rail actuator for high loads | ✓All-round talent with encapsulated guide system |

## Roller guide with wide timing-belt

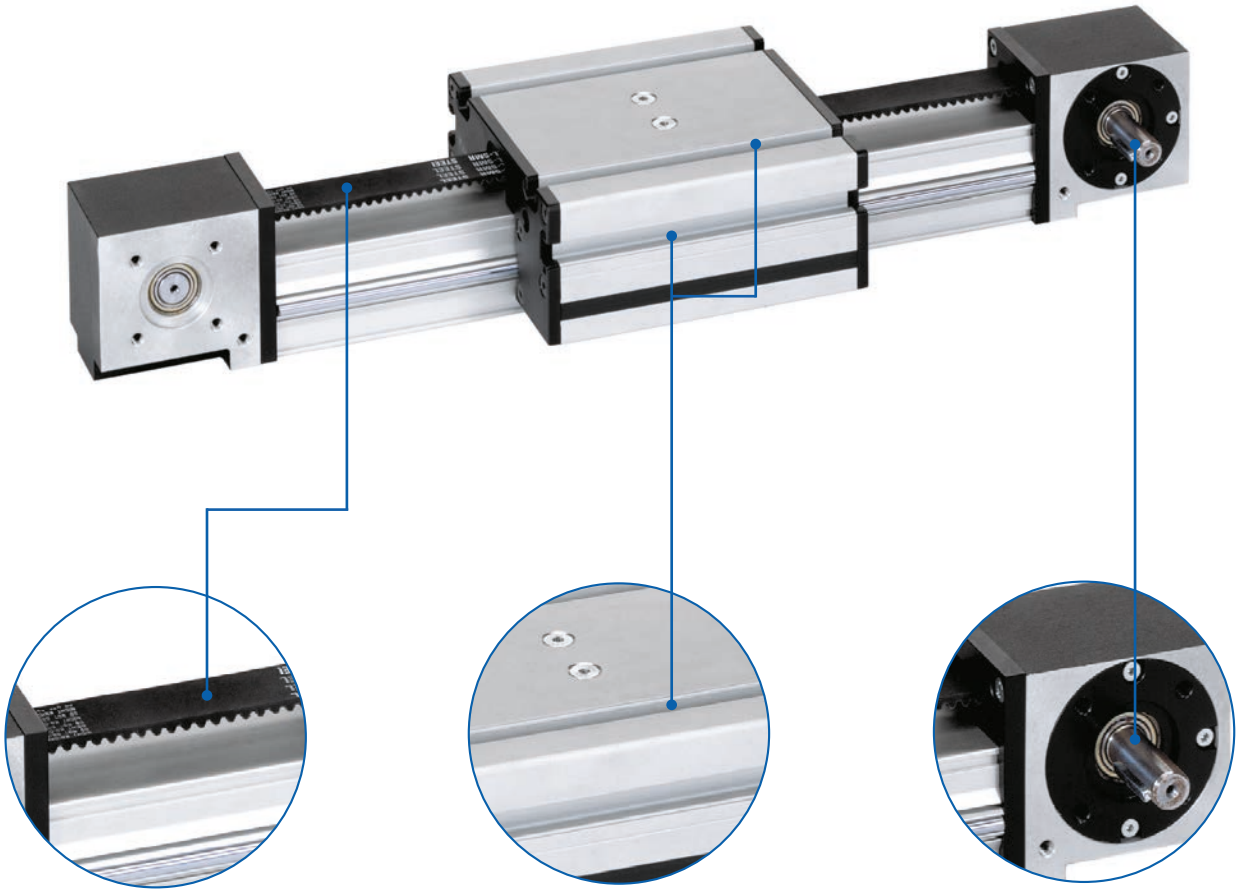

**Wide timing-belt**
✓ Transmission of large axial forces

**Fixing slots**
✓ Simple connection of accessories

**Shaft configuration**
✓ Freely configurable acc. to your requirements

### Features:

- Guide profile and carriage made of extruded aluminium
- BLOCAN® slot geometry in carriage
- Use of wide timing-belts up to 40 mm
- Carriage guidance by means of rollers
- Versions available with internal timing-belt (in guide profile)
- Version with two contradirectional carriages

### Options:

- Longer stroke lengths
- Second free-running carriage
- Extended carriage

# PL/PLZ/PLZ-i - Table of contents


## Properties/Technical data

- General information/operating conditions ... 324
- Load data ... 325
- No-load torques ... 324

## Versions
(Dimensions, order numbers)

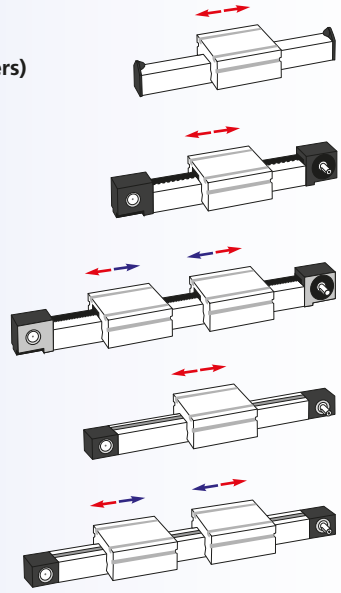

- PL guide unit ... 326
- PLZ timing-belt unit ... 328
- PLZ R/L timing-belt unit ... 330
  (two contradirectional carriages)
- Unit with internal timing-belt PLZ-i ... 332
- Unit with internal timing-belt PLZ-i R/L ... 334
  (two contradirectional carriages)

## Accessories

**Fixing**

- Fixing plate ... 336
- Slot stones ... 336

**Drive**

- Connecting/transmission unit ... 338 - 339
- Motor adaptor/couplings ... 340 - 343

**Position determination**

- Limit switch ... 344 - 346

## General information/operating conditions

| | |
|---|---|
| Design | Aluminium profile, timing-belt drive |
| Guide | Rollers, external |
| Installation position | Any position |
| Repeatability | 0.05 mm |
| Ambient temperature | 0°C to +60°C |
| Protection class | IP 20 |

| Type | Timing-belt | Pitch/ width | Eff. diam. of pulley [mm] | Max. input torque [Nm] | Max. speed [m/s] | Max. acceleration [m/s$^2$] |
|---|---|---|---|---|---|---|
| PLZ (timing-belt unit) | | | | | | |
| PLZ 30 | GT 5MR | 5/12 | 23.87 | 5 | 5 | 20 |
| PLZ 40 | GT 5MR | 5/20 | 27.08 | 8.5 | | |
| PLZ 50 | GT 5MR | 5/25 | 38.20 | 20 | | |
| PLZ 60 | GT 8MR | 8/28 | 56.02 | 55 | 10 | |
| PLZ 80 | GT 8MR | 8/40 | 61.12 | 90 | | |
| PLZ-i with internal timing-belt | | | | | | |
| PLZ-i 30 | GT 3MR | 3/6 | 13.37 | 1 | 0.5 | 20 |
| PLZ-i 40 | GT 3MR | 3/9 | 17.19 | 2 | | |
| PLZ-i 50 | GT 5MR | 5/15 | 22.28 | 5 | | |
| PLZ-i 60 | GT 5MR | 5/20 | 27.06 | 9 | | |
| PLZ-i 80 | GT 5MR | 5/30 | 33.42 | 19 | | |

## No-load torque

[Nm]

| Type | PLZ | PLZ-i |
|---|---|---|
| 30 | 0.25 | 0.35 |
| 40 | 0.35 | 0.45 |
| 50 | 0.60 | 0.70 |
| 60 | 0.80 | 0.90 |
| 80 | 1.00 | 1.10 |

## Load data*

F Force [N]

M Moment [Nm]

I Geometric moment of inertia [$cm^4$]

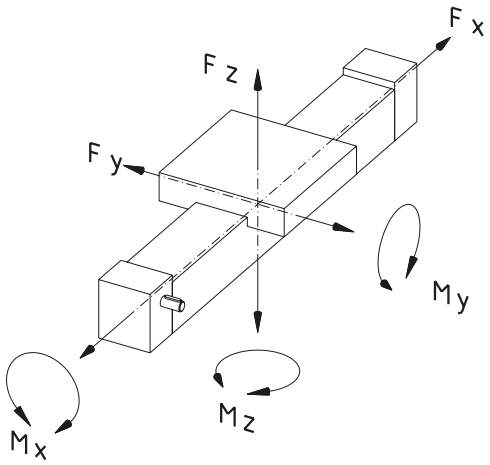


* With reference to carriage (static values, guide element resting on full surface)

| | Fx** | Fy | Fz | Mx | My | Mz |
|---|---|---|---|---|---|---|
| **PL (roller guide)** | | | | | | |
| PL 30 | – | 790 | 790 | 14 | 20 | 22 |
| PL 40 | – | 1020 | 1020 | 23 | 33 | 33 |
| PL 50 | – | 1020 | 1020 | 28 | 49 | 49 |
| PL 60 | – | 2550 | 2550 | 99 | 143 | 143 |
| PL 80 | – | 2550 | 2550 | 124 | 168 | 169 |
| **PLZ with external timing-belt** | | | | | | |
| PLZ 30 | 340 | 790 | 790 | 14 | 20 | 22 |
| PLZ 40 | 610 | 1020 | 1020 | 23 | 33 | 33 |
| PLZ 50 | 1000 | 1020 | 1020 | 28 | 49 | 49 |
| PLZ 60 | 1790 | 2550 | 2550 | 99 | 143 | 143 |
| PLZ 80 | 2810 | 2550 | 2550 | 124 | 168 | 169 |
| **PLZ-i with internal timing-belt** | | | | | | |
| PLZ-i 30 | 70 | 790 | 790 | 14 | 20 | 22 |
| PLZ-i 40 | 145 | 1020 | 1020 | 23 | 33 | 33 |
| PLZ-i 50 | 400 | 1020 | 1020 | 28 | 49 | 49 |
| PLZ-i 60 | 610 | 2550 | 2550 | 99 | 143 | 143 |
| PLZ-i 80 | 1100 | 2550 | 2550 | 124 | 168 | 169 |

** Initial tension of the timing belt 0,8 x Fx

## Geometric moment of inertia

[$cm^4$]

| Type | Iy | Iz |
|---|---|---|
| 30 | 4.3 | 6.4 |
| 40 | 14.4 | 19.9 |
| 50 | 35.5 | 44.3 |
| 60 | 77.3 | 111.5 |
| 80 | 201.9 | 280.7 |

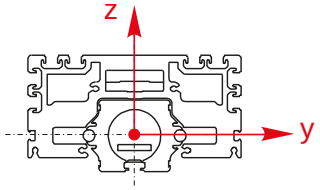

# PL - Versions

**Order information:**

- Longer travel lengths on request
- Second or extended carriage available on request

**Version** ■ **Guide**

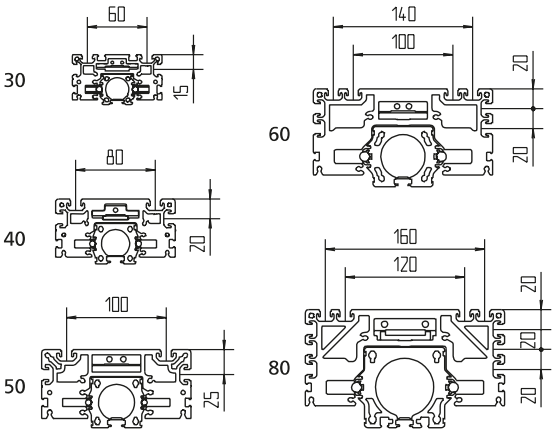




| Code No. | Type | Basic length | B | C | F | H | J | K |
|---|---|---|---|---|---|---|---|---|
| MMA3030AA | PL-II 30 | 142 | 90 | 50 | 4.5 | 50 | 102 | 34 |
| MMA4040AA | PL-II 40 | 172 | 120 | 65 | 6.5 | 63 | 132 | 44 |
| MMA5050AA | PL-II 50 | 202 | 150 | 78 | 9.0 | 74 | 162 | 54 |
| MMA6060AA | PL-II 60 | 232 | 180 | 98 | 11.5 | 84 | 192 | 72 |
| MMA8080AA | PL-II 80 | 252 | 200 | 118 | 21.5 | 104 | 212 | 92 |

_ _ _ _ Total length = basic length + travel [mm]

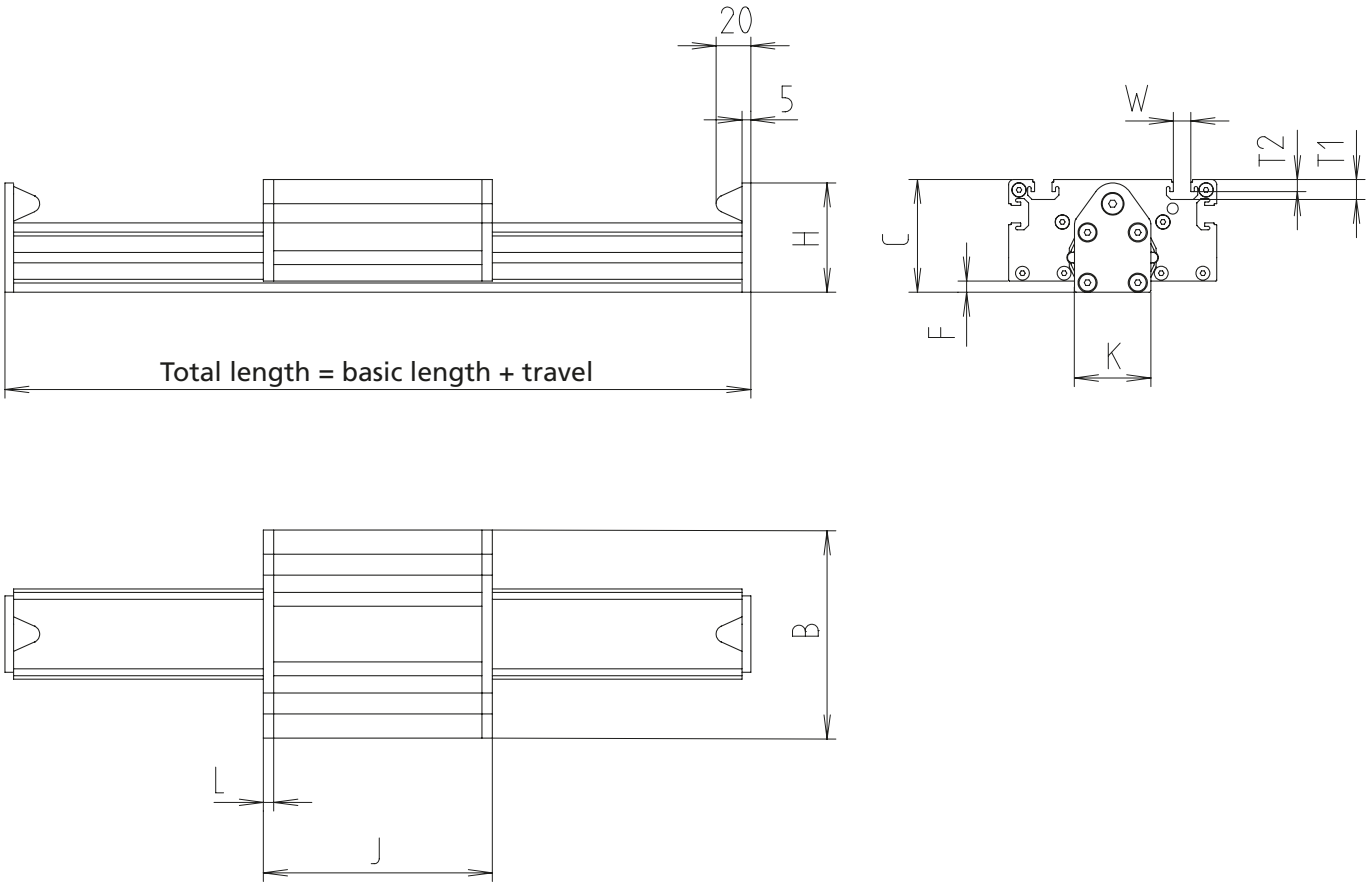


[mm]

| L | T1 | T2 | W | Max. travel | Mass [kg] | |
|---|---|---|---|---|---|---|
| | | | | | Basic length | per 100 mm travel |
| 6 | 8.5 | 4.5 | 10.1 | 5458 | 1.0 | 0.16 |
| 6 | 11.5 | 7 | 10.1 | 5428 | 1.9 | 0.28 |
| 6 | 11.5 | 7 | 10.1 | 5398 | 3.5 | 0.41 |
| 6 | 11.5 | 7 | 10.1 | 5778 | 5.9 | 0.60 |
| 6 | 11.5 | 7 | 10.1 | 5758 | 7.9 | 0.90 |

# PLZ - Versions

**Order information:**

- Longer travel lengths on request
- Second non driven or extended carriage available on request

**Version** ■ **Timing-belt unit**

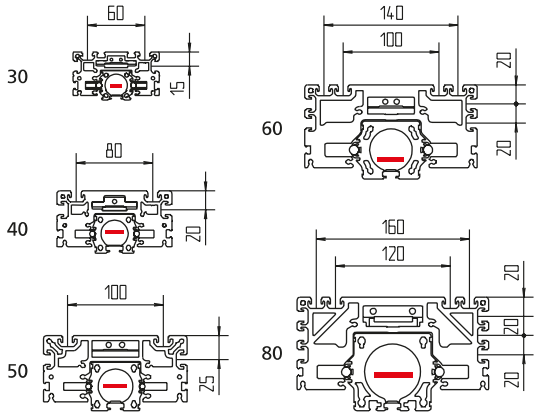




| Code No. | Type | Timing-belt | Basic length | B | C | D1 | D2 | F | G1 | G2 | G3 | H | I | J |
|---|---|---|---|---|---|---|---|---|---|---|---|---|---|---|
| FZA3030_A | PLZ 30 | 5M-12 | 220 | 90 | 50 | $22^{H7}$ | 10 | 4.5 | M4 | M5 | M5 | 25.5 | 6 | 102 |
| FZA4040_A | PLZ 40 | 5M-20 | 270 | 120 | 65 | $28^{H7}$ | 10 | 6.5 | M5 | M6 | M5 | 35.1 | 8 | 132 |
| FZA5050_A | PLZ 50 | 5M-25 | 332 | 150 | 78 | $35^{H7}$ | 14 | 9 | M6 | M6 | M5 | 43 | 8 | 162 |
| FZA6060_A | PLZ 60 | 8M-28 | 391 | 180 | 98 | $70^{H7}$ | 20 | 11.5 | M8 | M8 | M5 | 47 | 8 | 192 |
| FZA8080_A | PLZ 80 | 8M-40 | 428 | 200 | 118 | $70^{H7}$ | 25 | 21.5 | M8 | M8 | M5 | 66 | 10 | 212 |

FZA8080_A
- _ _ _ _ Total length = basic length + travel [mm]
- Configuration of drive shaft

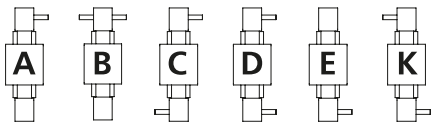

RK ROSE+KRIEGER

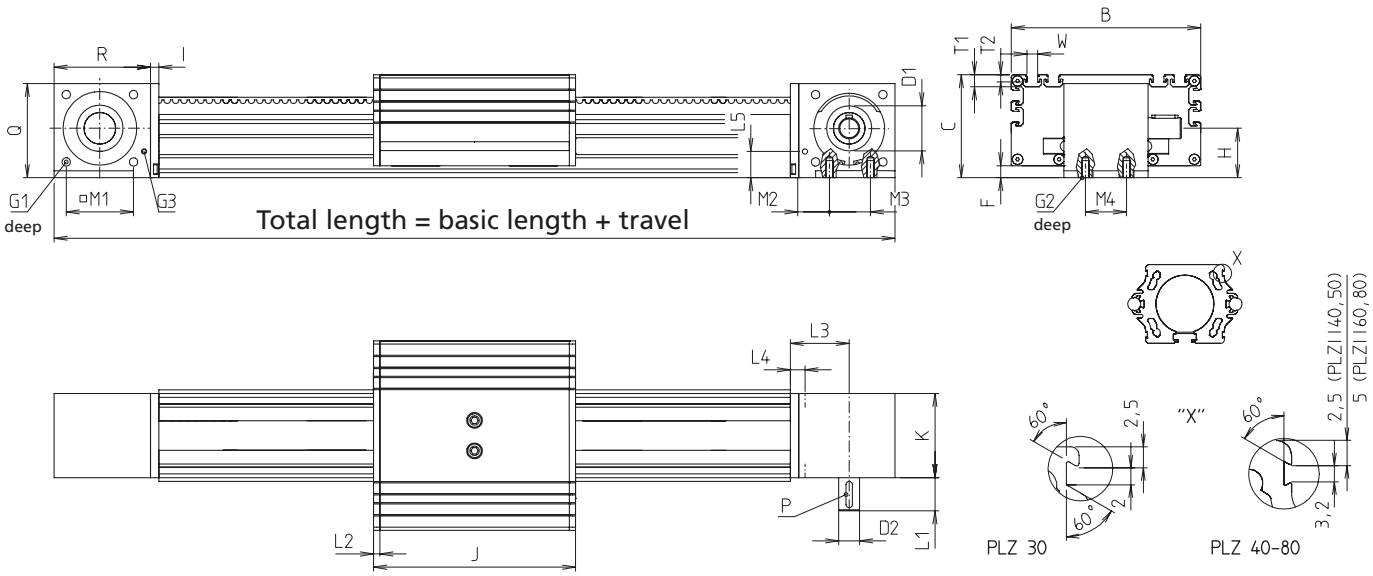


[mm]

| K | L1 | L2 | C | L4 | L5 | M1 | M2 | M3 | M4 | P | Q | R | T1 | T2 | W | Max. travel | Mass [kg] | |
|---|---|---|---|---|---|---|---|---|---|---|---|---|---|---|---|---|---|---|
| | | | | | | | | | | | | | | | | | Basic length | per 100 mm travel |
| 38 | 25 | 6 | 34 | 13 | 10 | 21 | 17 | 20 | 20 | 3 x 3 x 20 | 48 | 53 | 8.5 | 4.5 | 10.1 | 5498 | 1.23 | 0.17 |
| 48 | 28 | 6 | 40 | 16 | 15 | 29 | 20 | 20 | 20 | 3 x 3 x 20 | 61 | 61 | 11.5 | 7 | 10.1 | 5468 | 2.76 | 0.29 |
| 58 | 30 | 6 | 48 | 16 | 14 | 38 | 16 | 40 | 20 | 5 x 5 x 25 | 77 | 77 | 11.5 | 7 | 10.1 | 5438 | 5.17 | 0.41 |
| 80 | 31.5 | 6 | 56 | 16 | 29 | 64 | 30 | 40 | 40 | 6 x 6 x 25 | 89.5 | 91.5 | 11.5 | 7 | 10.1 | 5808 | 9.45 | 0.63 |
| 100 | 31.5 | 6 | 63 | 18 | 29 | 64 | 35 | 40 | 40 | 8 x 7 x 25 | 109.5 | 98 | 11.5 | 7 | 10.1 | 5788 | 14.05 | 0.93 |

# PLZ R/L -Versions

**Order information:**

- Longer travel lengths on request
- Extended carriage available on request

**Version**

- **Timing-belt unit**
- **Two opposite moving carriages**

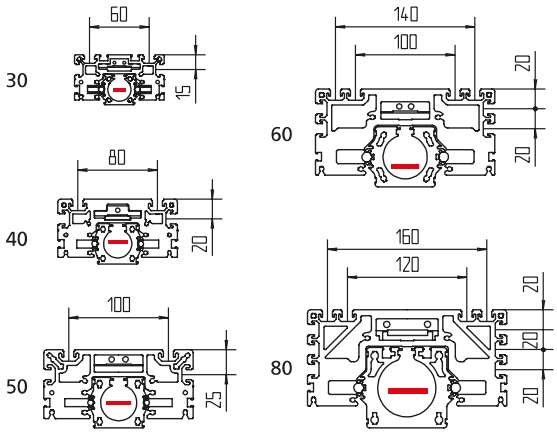


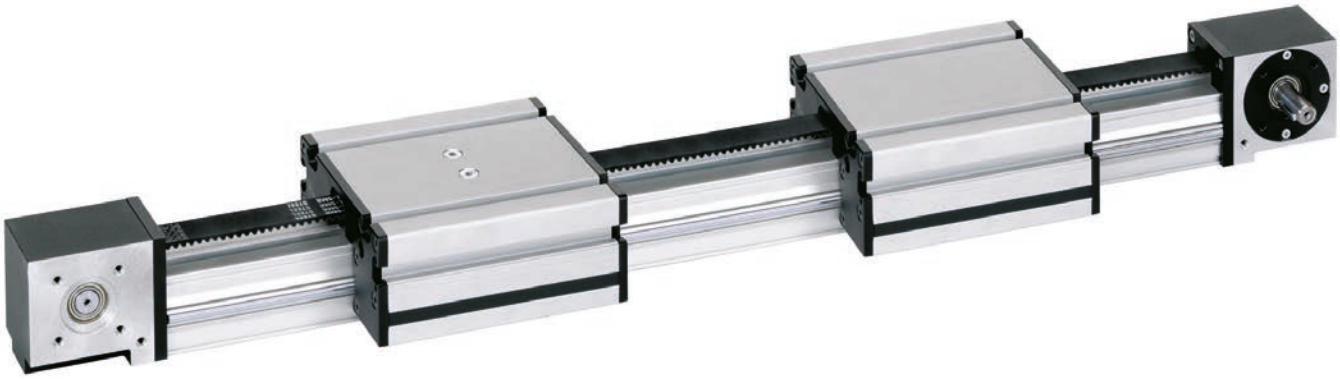

| Code No. | Type | Timing-belt | Basic length | B | C | D1 | D2 | F | G1 | G2 | G3 | H | I | J |
|---|---|---|---|---|---|---|---|---|---|---|---|---|---|---|
| FZC3030_A | PLZ 30 | 5M-12 | 322 | 90 | 50 | $22^{H7}$ | 10 | 4.5 | M4 | M5 | M5 | 25.5 | 6 | 102 |
| FZC4040_A | PLZ 40 | 5M-20 | 402 | 120 | 65 | $28^{H7}$ | 10 | 6.5 | M5 | M6 | M5 | 35.1 | 8 | 132 |
| FZC5050_A | PLZ 50 | 5M-25 | 494 | 150 | 78 | $35^{H7}$ | 14 | 9 | M6 | M6 | M5 | 43 | 8 | 162 |
| FZC6060_A | PLZ 60 | 8M-28 | 583 | 180 | 98 | $70^{H7}$ | 20 | 11.5 | M8 | M8 | M5 | 47 | 8 | 192 |
| FZC8080_A | PLZ 80 | 8M-40 | 640 | 200 | 118 | $70^{H7}$ | 25 | 21.5 | M8 | M8 | M5 | 66 | 10 | 212 |

_ _ _ _ Total length = basic length + travel [mm]

Configuration of drive shaft

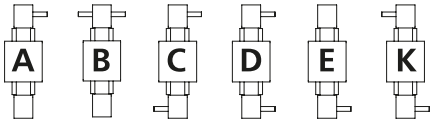

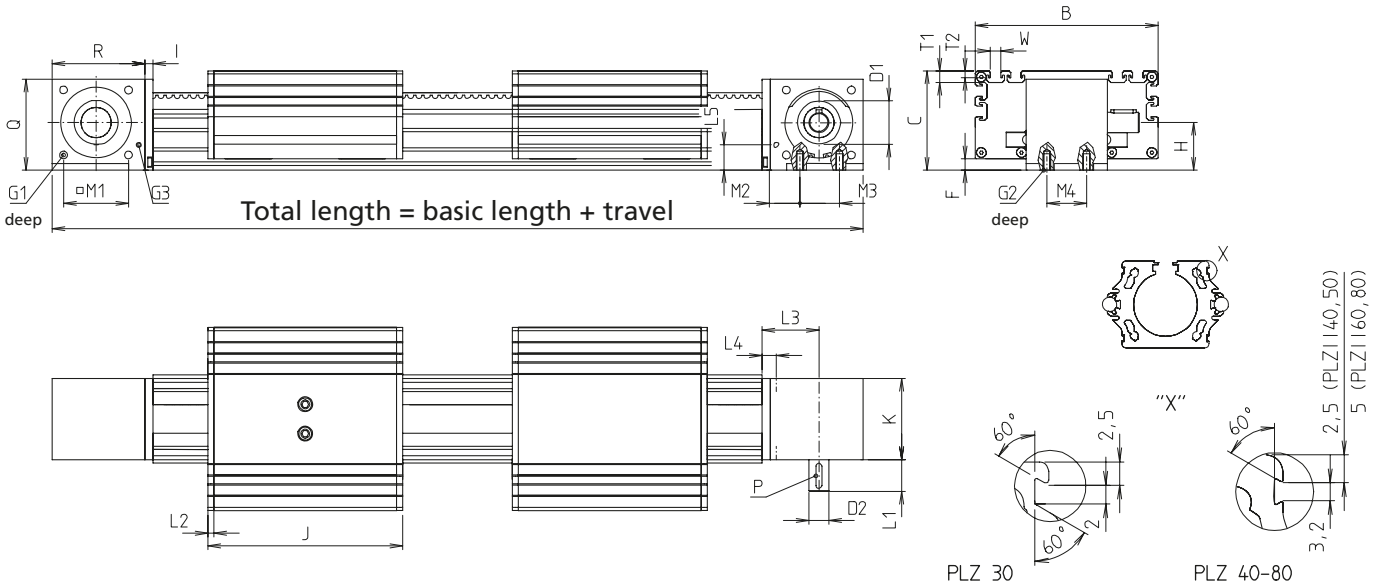


[mm]

| K | L1 | L2 | C | L4 | L5 | M1 | M2 | M3 | M4 | P | Q | R | T1 | T2 | W | Max. trav-el | Mass [kg] | |
|---|---|---|---|---|---|---|---|---|---|---|---|---|---|---|---|---|---|---|
| | | | | | | | | | | | | | | | | | Basic length | per 100 mm travel |
| 38 | 25 | 6 | 34 | 13 | 10 | 21 | 17 | 20 | 20 | 3 x 3 x 20 | 48 | 53 | 8.5 | 4.5 | 10.1 | 5396 | 1.89 | 0.17 |
| 48 | 28 | 6 | 40 | 16 | 15 | 29 | 20 | 20 | 20 | 3 x 3 x 20 | 61 | 61 | 11.5 | 7 | 10.1 | 5336 | 4.38 | 0.29 |
| 58 | 30 | 6 | 48 | 16 | 14 | 38 | 16 | 40 | 20 | 5 x 5 x 25 | 77 | 77 | 11.5 | 7 | 10.1 | 5276 | 8.26 | 0.41 |
| 80 | 31.5 | 6 | 56 | 16 | 29 | 64 | 30 | 40 | 40 | 6 x 6 x 25 | 89.5 | 91.5 | 11.5 | 7 | 10.1 | 5616 | 14.50 | 0.63 |
| 100 | 31.5 | 6 | 63 | 18 | 29 | 64 | 35 | 40 | 40 | 8 x 7 x 25 | 109.5 | 98 | 11.5 | 7 | 10.1 | 5576 | 20.63 | 0.93 |

# PLZ-i - Versions

**Order information:**

- Longer travel lengths on request
- Second non driven or extended carriage available on request

**Version** ■ **Unit with internal timing-belt**

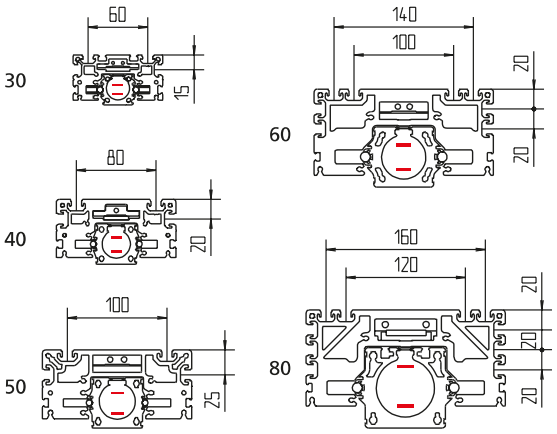




| Code No. | Type | Timing-belt | Basic length | B | C | D1 | D2 | F | G1 | G2 | H | J | K |
|---|---|---|---|---|---|---|---|---|---|---|---|---|---|
| FZI3030_A | PLZ-i 30 | 3M-6 | 176 | 90 | 50 | $22^{J6}$ | 6 | 4.5 | M4 | M5 | 15 | 102 | 38 |
| FZI4040_A | PLZ-i 40 | 3M-9 | 226 | 120 | 65 | $30^{J6}$ | 8 | 6.5 | M5 | M6 | 20 | 132 | 48 |
| FZI5050_A | PLZ-i 50 | 5M-15 | 276 | 150 | 78 | $35^{J6}$ | 10 | 9 | M6 | M6 | 25 | 162 | 58 |
| FZI6060_A | PLZ-i 60 | 5M-20 | 318 | 180 | 98 | $35^{J6}$ | 12 | 11.5 | M6 | M6 | 30 | 192 | 72 |
| FZI8080_A | PLZ-i 80 | 5M-30 | 378 | 200 | 118 | $50^{J7}$ | 14 | 21.5 | M8 | M8 | 40 | 212 | 92 |

____ Total length = basic length + travel [mm]

Configuration of drive shaft

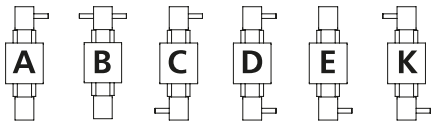

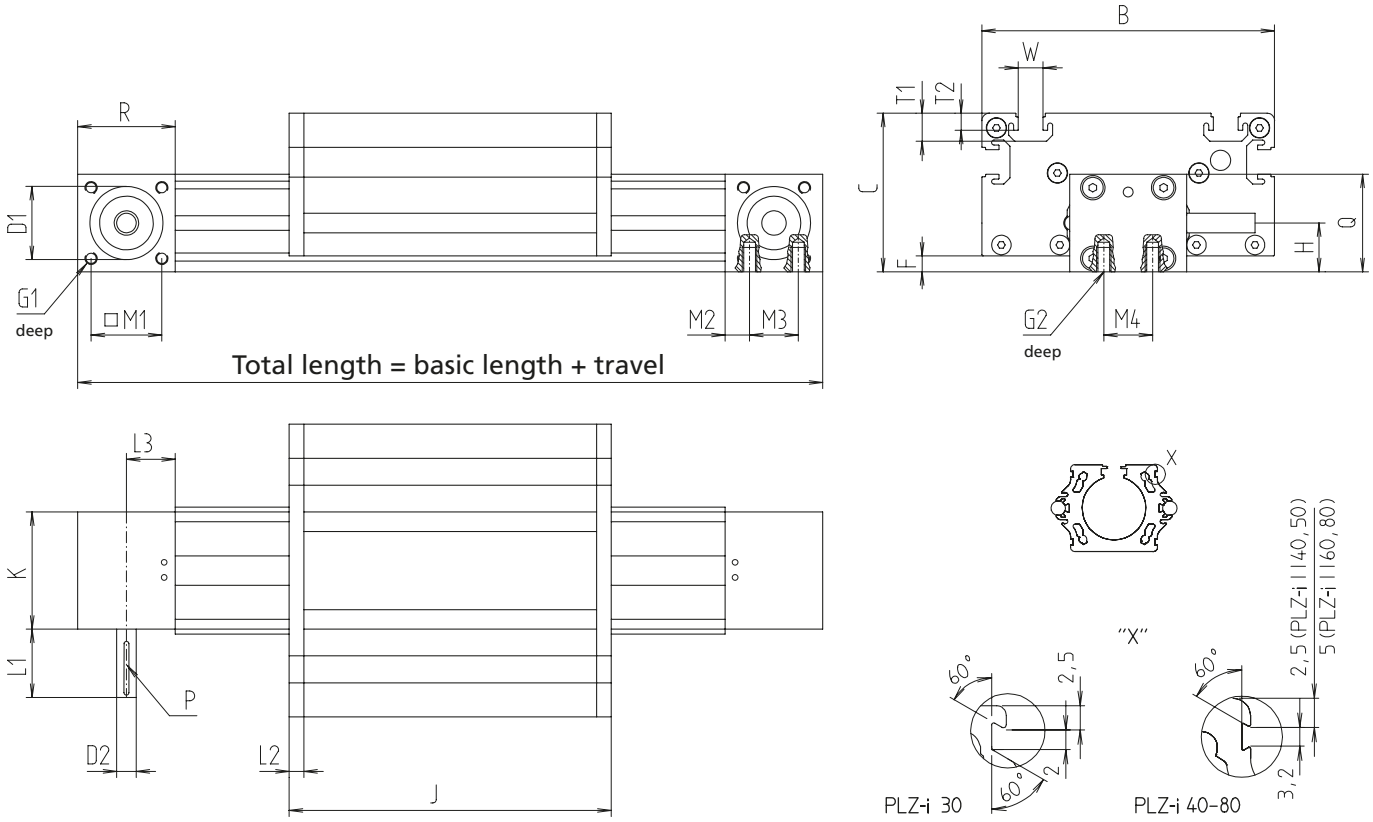


[mm]

| L1 | L2 | C | M1 | M2 | M3 | M4 | P | Q | R | T1 | T2 | W | Max. travel | Mass [kg] | |
|---|---|---|---|---|---|---|---|---|---|---|---|---|---|---|---|
| | | | | | | | | | | | | | | Basic length | per 100 mm travel |
| 25 | 6 | 15 | 21 | 6 | 20 | – | 2 x 2 x 20 | 30 | 37 | 8.5 | 4.5 | 10.1 | 4590 | 0.92 | 0.15 |
| 28 | 6 | 20 | 29 | 10 | 20 | – | 2 x 2 x 20 | 40 | 47 | 11.5 | 7 | 10.1 | 5090 | 2.10 | 0.28 |
| 30 | 6 | 25 | 38 | 15 | 20 | 20 | 3 x 3 x 20 | 50 | 57 | 11.5 | 7 | 10.1 | 5398 | 3.92 | 0.40 |
| 30 | 6 | 30 | 43 | 20 | 20 | 20 | 4 x 4 x 25 | 60 | 63 | 11.5 | 7 | 10.1 | 5808 | 7.15 | 0.61 |
| 38 | 6 | 40 | 64 | 20 | 40 | 40 | 5 x 5 x 32 | 80 | 83 | 11.5 | 7 | 10.1 | 5788 | 10.52 | 0.91 |

# PLZ-i R/L - Versions

**Order information:**

- Longer travel lengths on request
- Extended carriage available on request

**Version**

- **Unit with internal timing-belt**
- **Two opposite moving carriages**

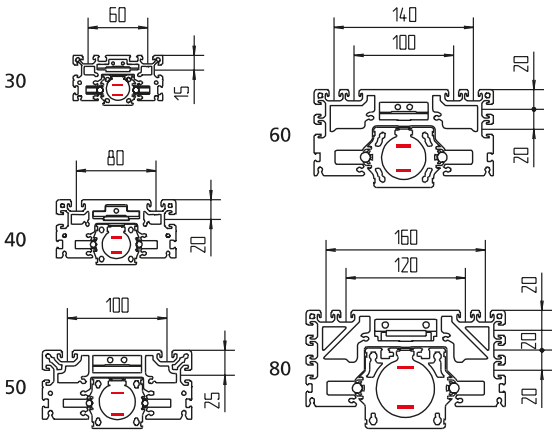




| Code No. | Type | Timing-belt | Basic length | B | C | D1 | D2 | F | G1 | G2 | H | J | K |
|---|---|---|---|---|---|---|---|---|---|---|---|---|---|
| FZK3030_A | PLZ-i 30 | 3M-6 | 278 | 90 | 50 | $22^{J6}$ | 6 | 4.5 | M4 | M5 | 15 | 102 | 38 |
| FZK4040_A | PLZ-i 40 | 3M-9 | 358 | 120 | 65 | $30^{J6}$ | 8 | 6.5 | M5 | M6 | 20 | 132 | 48 |
| FZK5050_A | PLZ-i 50 | 5M-15 | 438 | 150 | 78 | $35^{J6}$ | 10 | 9 | M6 | M6 | 25 | 162 | 58 |
| FZK6060_A | PLZ-i 60 | 5M-20 | 510 | 180 | 98 | $35^{J6}$ | 12 | 11.5 | M6 | M6 | 30 | 192 | 72 |
| FZK8080_A | PLZ-i 80 | 5M-30 | 590 | 200 | 118 | $50^{J7}$ | 14 | 21.5 | M8 | M8 | 40 | 212 | 92 |

FZK____A — ____ Total length = basic length + travel [mm]

Configuration of drive shaft

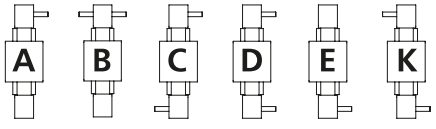

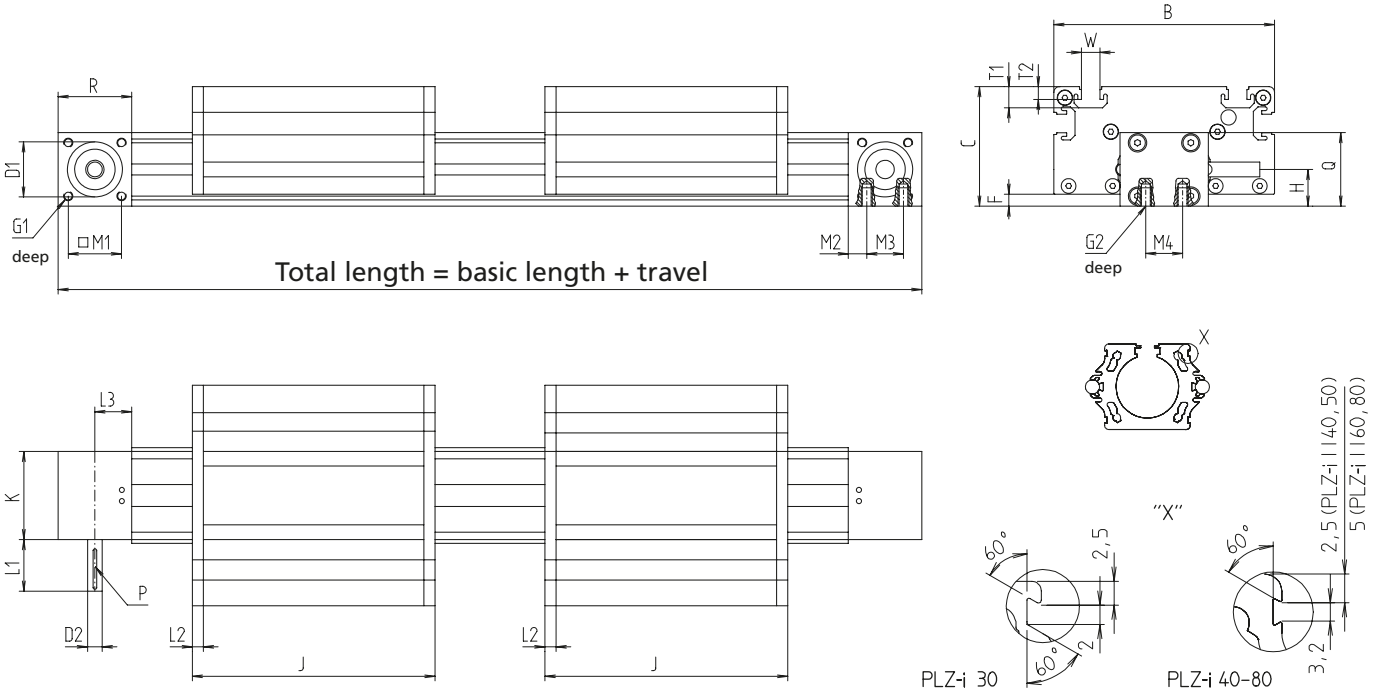


[mm]

| L1 | L2 | C | M1 | M2 | M3 | M4 | P | Q | R | T1 | T2 | W | Max. travel | Mass [kg] | |
|---|---|---|---|---|---|---|---|---|---|---|---|---|---|---|---|
| | | | | | | | | | | | | | | Basic length | per 100 mm travel |
| 25 | 6 | 15 | 21 | 6 | 20 | – | 2 x 2 x 20 | 30 | 37 | 8.5 | 4.5 | 10.1 | 4490 | 1.61 | 0.17 |
| 28 | 6 | 20 | 29 | 10 | 20 | – | 2 x 2 x 20 | 40 | 47 | 11.5 | 7 | 10.1 | 4960 | 3.72 | 0.29 |
| 30 | 6 | 25 | 38 | 15 | 20 | 20 | 3 x 3 x 20 | 50 | 57 | 11.5 | 7 | 10.1 | 5266 | 7.02 | 0.41 |
| 30 | 6 | 30 | 43 | 20 | 20 | 20 | 4 x 4 x 25 | 60 | 63 | 11.5 | 7 | 10.1 | 5616 | 12.33 | 0.63 |
| 38 | 6 | 40 | 64 | 20 | 40 | 40 | 5 x 5 x 32 | 80 | 83 | 11.5 | 7 | 10.1 | 5576 | 17.54 | 0.93 |

**Order instruction:**

- **Purchase only in lot sizes and a multiple of that, see product table below**

- Plate for fixing the linear unit to a substructure
- The fixing plates can also be retrofitted and moved axially

**Scope of delivery:** without screws

## Fixing plate

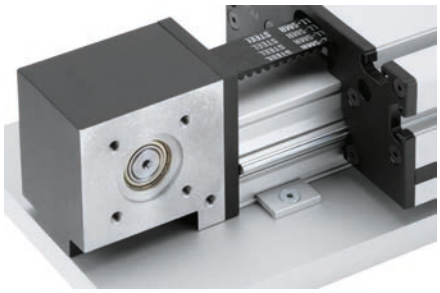

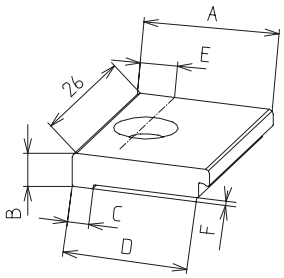


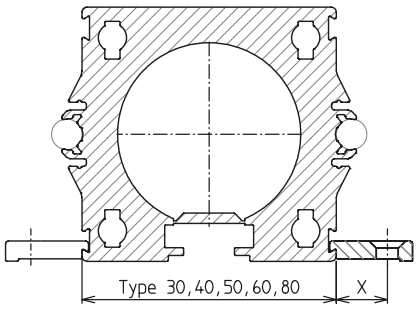


[mm]

| Code No. | Type | lot sizes | Version | A | B | C | D | E | F | X |
|---|---|---|---|---|---|---|---|---|---|---|
| 955101 | PLZ 30, 40, 50 | 10, 20, 30... pcs | Counterbore for M5 screw, DIN 7991 | 16.3 | 4 | 2.5 | 15 | 7 | 0.5 | 8 |
| 955111 | PLZ 60, 80 | 10, 20, 30... pcs | Counterbore for M6 screw, DIN 7984 | 23.8 | 7.5 | 3.5 | 22.5 | 12.5 | 1 | 10 |

## Slot stone -N-

- Slot stone for lateral insertion in the carriage
- For further slot stone versions, please refer to the catalogue "BLOCAN® Profile Technology"

**Material:** Steel, galvanised



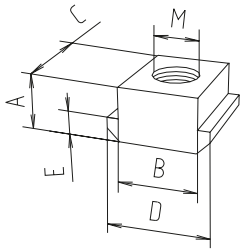


[mm] 


| Code No. | Type | lot sizes | Version | A | B | C | D | E | M | F [N] |
|---|---|---|---|---|---|---|---|---|---|---|
| 4006201 | PLZ 30 | 10, 20, 30... pcs | M5 | 5 | 10 | 13 | 13 | 3 | M5 | 4000 |
| 4006203 | PLZ 30 | 10, 20, 30... pcs | M6 | 5 | 10 | 13 | 13 | 3 | M6 | 4000 |
| 4006202 | PLZ 30 | 10, 20, 30... pcs | M8 | 5 | 10 | 13 | 13 | 3 | M8 | 4000 |
| 4026207 | PLZ 40-80 | 10, 20, 30... pcs | M5 | 8 | 10 | 13 | 15 | 4 | M5 | 4000 |
| 4026203 | PLZ 40-80 | 10, 20, 30... pcs | M6 | 8 | 10 | 13 | 15 | 4 | M6 | 9000 |
| 4026206 | PLZ 40-80 | 10, 20, 30... pcs | M8 | 8 | 10 | 13 | 15 | 4 | M8 | 9000 |

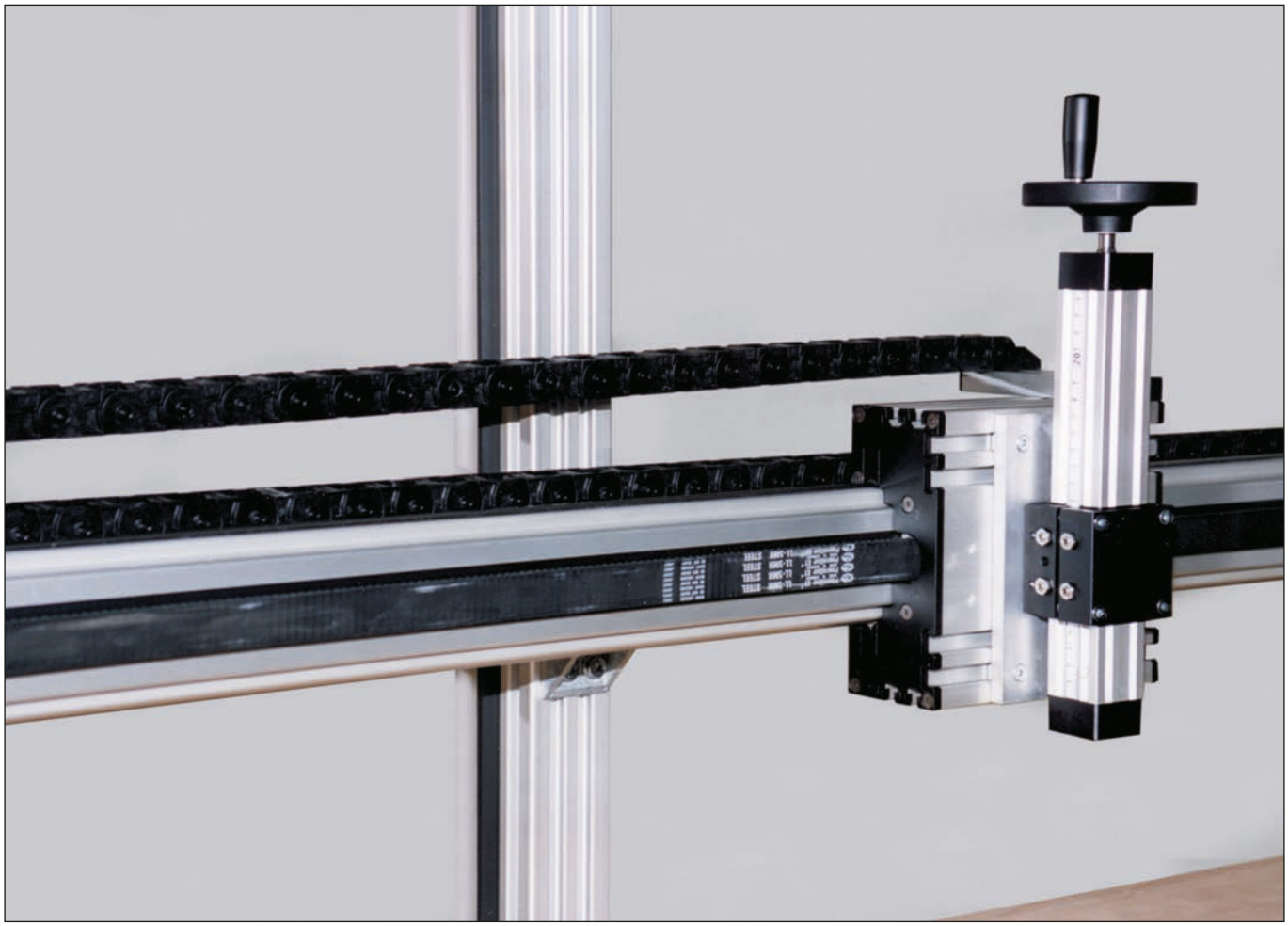

X-Z combination - PLZ/quad EV

## Connecting adaptor 30-50



- Connecting piece between linear unit and transmission unit

**Material:** Aluminium, black anodised
Galvanised fastenings

**Scope of delivery:** Adaptor with fastenings

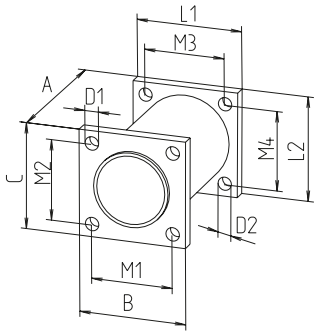


[mm]

| Code No. | Type | A | B | C | D1 | D2 | L1 | L2 | M1 | M2 | M3 | M4 |
|---|---|---|---|---|---|---|---|---|---|---|---|---|
| 91305 | PLZ 30 | 62 | 30 | 30 | 4.3 | 4.3 | 48 | 30 | 21 | 21 | 21 | 21 |
| 91306 | PLZ 40 | 68 | 40 | 40 | 5.4 | 5.4 | 40 | 40 | 29 | 29 | 29 | 29 |
| 91307 | PLZ 50 | 75 | 50 | 50 | 6.4 | 6.4 | 50 | 50 | 38 | 38 | 38 | 38 |
| 91316 | PLZ-i 40 | 68 | 40 | 40 | 5.4 | 5.4 | 40 | 40 | 29 | 29 | 29 | 29 |

## Connecting and transmission unit 30-50



- Transmission of torques or as connecting unit between two parallel linear units

**Material:** Aluminium, anodised

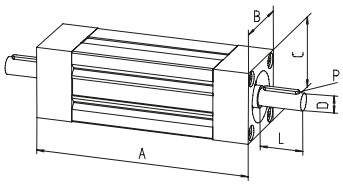


[mm]

| Code No. | Type | A (basic length) | B | C | D | L | P |
|---|---|---|---|---|---|---|---|
| 92503_ _ _ _ | Transmission unit 30 | 60 | 30 | 30 | 8 | 25 | 2 x 2 x 20 |
| 92513_ _ _ _ | Connecting unit 30 | 60 | 30 | 30 | – | – | – |
| 92504_ _ _ _ | Transmission unit 40 | 80 | 40 | 40 | 10 | 28 | 3 x 3 x 20 |
| 92514_ _ _ _ | Connecting unit 40 | 80 | 40 | 40 | – | – | – |
| 92505_ _ _ _ | Transmission unit 50 | 80 | 50 | 50 | 12 | 30 | 4 x 4 x 25 |
| 92515_ _ _ _ | Connecting unit 50 | 80 | 50 | 50 | – | – | – |



Length [mm]

## Coupling for transmission unit 30-50



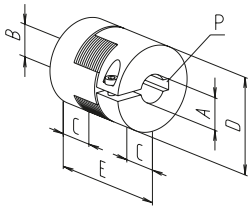


- Shaft connection without back-lash
- Easy plug-in assembly

**Material:** Hub, aluminium
Gear ring, polyurethane

[mm]

| Code No. | Type | A | B | C | D | E | P | Torque [Nm] with feather key | Torque [Nm] without feather key |
|---|---|---|---|---|---|---|---|---|---|
| 9109200810 | PLZ 30 | 8 | 10 | 10 | 20 | 30 | 2 x 2/3 x 3 | 5 | 3 |
| 9109201010 | PLZ 40 | 10 | 10 | 10 | 20 | 30 | 3 x 3/3 x 3 | 5 | 3 |
| 9114301214 | PLZ 50 | 12 | 14 | 11 | 30 | 35 | 4 x 4/5 x 5 | 12 | 6 |
| 9109200608 | PLZ-i 30 | 6 | 8 | 10 | 20 | 30 | 2 x 2/2 x 2 | 5 | 3 |
| 9109200810 | PLZ-i 40 | 8 | 10 | 10 | 20 | 30 | 2 x 2/3 x 3 | 5 | 3 |
| 9114301012 | PLZ-i 50 | 10 | 12 | 11 | 30 | 35 | 3 x 3/4 x 4 | 5 | 3 |

## Transmission unit 60-80

- Transmission of high torques up to 120 Nm on parallel linear units
- Synchronisation of carriages via zero point alignment

### Synchronous version

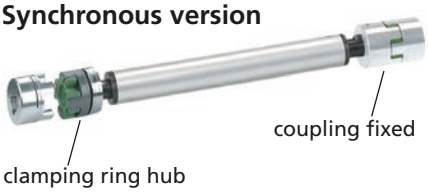


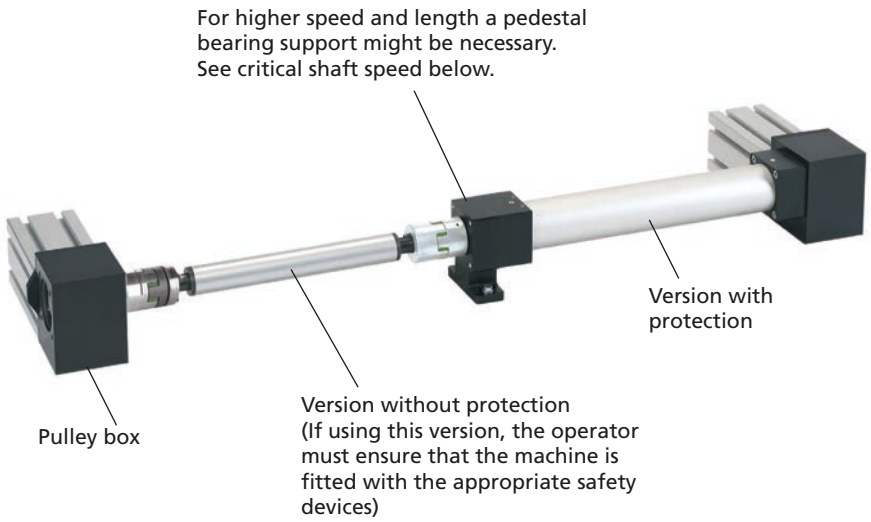


### Critical shaft speed:

max. unsupported length [mm] = (2720 - speed [rpm]) + 2 x 107.5

max. speed [rpm] = 2720 - L [mm]

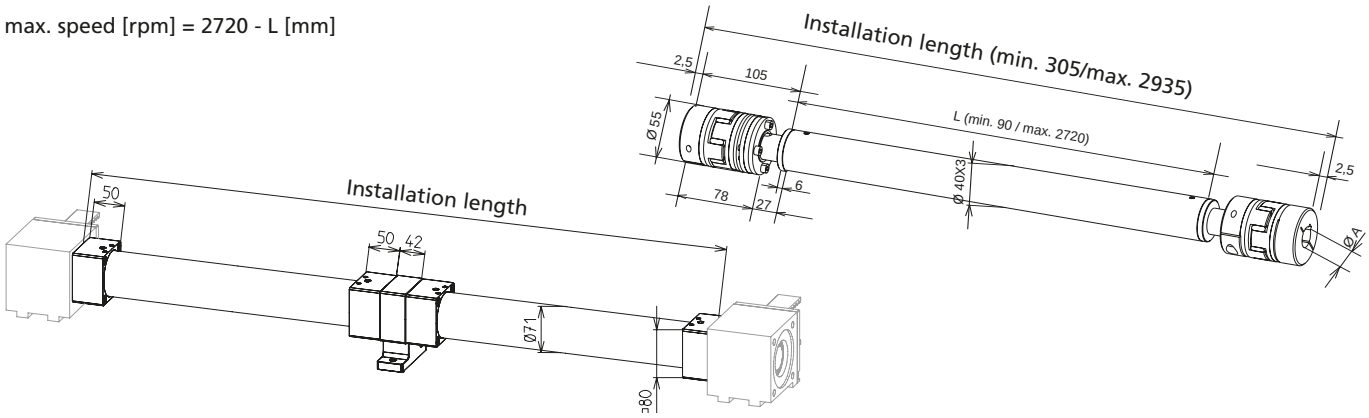


[mm]

| Code No. | Version | for linear unit | A [mm] | Weight [kg] | | |
|---|---|---|---|---|---|---|
| | | | | 1000 mm | per 100 mm | Pedestal bearing support |
| 9252036 _ _ _ _ _ | Without protection | PLZ 60 | 20 | 5.23 | 0.23 | 1.4 |
| 9252136 _ _ _ _ _ | With protection | PLZ 60 | 20 | 8.56 | 0.4 | 1.4 |
| 9252038 _ _ _ _ _ | Without protection | PLZ 80 | 25 | 5.23 | 0.23 | 1.5 |
| 9252138 _ _ _ _ _ | With protection | PLZ 80 | 25 | 8.56 | 0.4 | 1.5 |

Installation length [mm]

2 = without pedestal bearing support
3 = with pedestal bearing support

## Selection table - motor adaptor/coupling

| Type | Servo motors without gear | | | Servomotor with gear | | | Three-phase motor | |
|---|---|---|---|---|---|---|---|---|
| | RK-AC 118 | RK-AC 240 | RK-AC 470 | RK-AC 112 | RK-AC 260<br>RK-AC 280 | RK-AC 345 | 90/120W | 180/250 W |
| PLZ 30 | 949211 | – | – | 949426 | – | – | 94995 | 949948 |
| | 911430 1011 | – | – | 911430 1014 | – | – | 910920<br>1012 | 911430 1014 |
| PLZ 40 | 949212 | 949231 | – | 949427 | 949428 | – | 94987 | 94988 |
| | 911430 1011 | 911430 1014 | – | 911430 1014 | 911940 1020 | – | 911430<br>1012 | 911430 1014 |
| PLZ 50 | 949213 | 949232 | – | 949429 | 949430 | – | 94905 | 949527 |
| | 911430 1114 | 911430 1414 | – | 911940 1414 | 911940 1420 | – | 911940<br>1214 | 911430 1414 |
| PLZ 60 | 949214 | 949233 | 949243 | 949431 | 949432 | 949433 | 94956 | 94950 |
| | 911940 1120 | 911940 1420 | 911940<br>1920 | 911940 1420 | 911940 2020 | 912855<br>2025 | 911940<br>1220 | 911940 1420 |
| PLZ 80 | – | 949234 | 949244 | 949434 | 949435 | 949436 | 949329 | 949114 |
| | – | 912855 1425 | 912855<br>1925 | 912855 1425 | 912855 2025 | 912855<br>2525 | 912855<br>1225 | 912855 2025 |
| PLZ-i 30 | 949501 | – | – | – | – | – | 949504 | – |
| | 911430 0611 | – | – | – | – | – | 910920<br>0612 | – |
| PLZ-i 40 | 949510 | 949512 | – | – | – | – | 949516 | 949517 |
| | 911430 0811 | 911430 0814 | – | – | – | – | 911430<br>0812 | 911430 0814 |
| PLZ-i 50 | 949520 | 949522 | – | – | – | – | 949526 | 949527 |
| | 911430 1011 | 911430 1014 | – | – | – | – | 911940<br>1012 | 911430 1014 |
| PLZ-i 60 | 949540 | 949542 | 949544 | – | – | – | 949547 | 949548 |
| | 911430 1112 | 911940 1214 | 911940<br>1219 | – | – | – | 911940<br>1212 | 911940 1212 |
| PLZ-i 80 | – | 949560 | 949562 | – | – | – | 949566 | 949567 |
| | – | 911940 1414 | 911940<br>1419 | – | – | – | 911940<br>1214 | 911940 1414 |

Code No. Motor adaptor:
**949560**

Code No. Coupling with specification of shaft diameter
1st end = 14 mm
2nd end = 14 mm:
**911940 1414**

**Note:**
For further details on motor versions, please refer to the chapter "Motors and controls"

## Motor adaptor

- Simple assembly
- Exact fit due to centering shoulders

**Material:**
Aluminium, black anodised

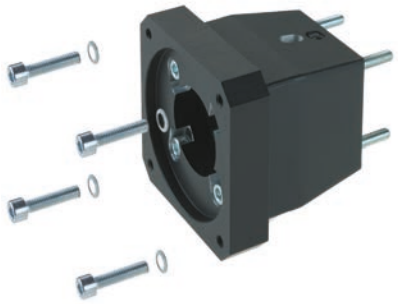

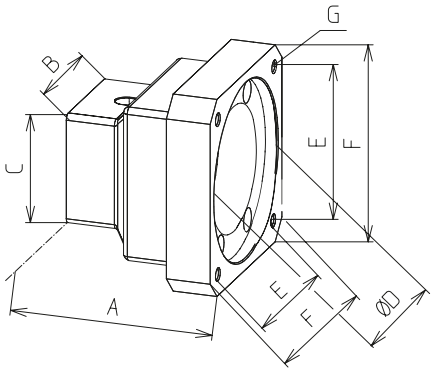


| Code No. | Type | A | B | C | D | E | F | G |
|---|---|---|---|---|---|---|---|---|
| 949426 | PLZ-30 | 73 | 40 | 40 | 40 | 53 | 70 | Ø5,5 |
| 949211 | PLZ-30 | 63 | 40 | 40 | 60 | 53 | 70 | M5 |
| 94995 | PLZ-30 | 65 | 40 | 40 | 50 | 46 | 80 | M5 |
| 949948 | PLZ-30 | 70 | 40 | 40 | 80 | 100 | Ø120 | Ø6,6 |
| 949427 | PLZ-40 | 75 | 50 | 50 | 40 | 53 | 70 | Ø5,5 |
| 949212 | PLZ-40 | 65 | 50 | 50 | 60 | 53 | 70 | M5 |
| 949231 | PLZ-40 | 73 | 50 | 50 | 80 | 70,7 | 90 | M6 |
| 949428 | PLZ-40 | 93 | 50 | 50 | 60 | 70,7 | 90 | Ø6,6 |
| 94987 | PLZ-40 | 73 | 50 | 50 | 50 | 46 | 80 | M5 |
| 94988 | PLZ-40 | 73 | 50 | 50 | 80 | 100 | Ø120 | Ø6,6 |
| 949429 | PLZ-50 | 85 | 52 | 52 | 40 | 53 | 70 | Ø5,5 |
| 949213 | PLZ-50 | 66 | 52 | 52 | 60 | 53 | 70 | M5 |
| 949232 | PLZ-50 | 73 | 52 | 52 | 80 | 70,7 | 90 | M6 |
| 949430 | PLZ-50 | 89 | 52 | 52 | 60 | 70,7 | 90 | Ø6,6 |
| 949257 | PLZ-50 | 73 | 52 | 52 | 73 | 70 | 90 | M6 |
| 94905 | PLZ-50 | 73 | 52 | 52 | 50 | 65 | 80 | M5 |
| 949527 | PLZ-50 | 75 | 52 | 52 | 80 | 100 | Ø120 | Ø6,6 |
| 949431 | PLZ-60 | 84 | 80 | 80 | 40 | 53 | 70 | Ø5,5 |
| 949214 | PLZ-60 | 74 | 80 | 80 | 60 | 53 | 70 | M5 |
| 949233 | PLZ-60 | 79 | 80 | 80 | 80 | 70,7 | 90 | M6 |
| 949432 | PLZ-60 | 89 | 80 | 80 | 60 | 70,7 | 70 | Ø6,6 |
| 949433 | PLZ-60 | 114 | 80 | 80 | 80 | 91,9 | 115 | Ø9 |
| 949243 | PLZ-60 | 89 | 80 | 80 | 95 | 81,3 | 115 | M8 |
| 94956 | PLZ-60 | 79 | 80 | 80 | 50 | 46 | 80 | M5 |
| 94950 | PLZ-60 | 79 | 80 | 80 | 80 | 100 | Ø120 | Ø6,6 |
| 949434 | PLZ-80 | 99 | 80 | 80 | 40 | 53 | 70 | Ø5,5 |
| 949234 | PLZ-80 | 86 | 80 | 80 | 80 | 70,7 | 90 | M6 |
| 949435 | PLZ-80 | 96 | 80 | 80 | 60 | 70,7 | 70 | Ø6,6 |
| 949436 | PLZ-80 | 111 | 80 | 80 | 80 | 91,9 | 115 | Ø9 |
| 949244 | PLZ-80 | 96 | 80 | 80 | 95 | 81,3 | 115 | M8 |
| 949329 | PLZ-80 | 89 | 80 | 80 | 50 | 46 | 80 | M5 |
| 949114 | PLZ-80 | 86 | 80 | 80 | 80 | 100 | Ø120 | Ø6,6 |

[mm]

| Code No. | Type | A | B | C | D | E | F | G |
|---|---|---|---|---|---|---|---|---|
| 949501 | PLZ-i-30 | 63 | 40 | 40 | 60 | 53 | 70 | M5 |
| 949504 | PLZ-i-30 | 65 | 40 | 40 | 50 | 46 | 80 | M5 |
| 949510 | PLZ-i 40 | 65 | 50 | 50 | 60 | 53 | 70 | M5 |
| 949512 | PLZ-i 40 | 73 | 50 | 50 | 80 | 70,7 | 90 | M6 |
| 949516 | PLZ-i 40 | 73 | 50 | 50 | 50 | 46 | 80 | M5 |
| 949517 | PLZ-i 40 | 73 | 50 | 50 | 80 | 100 | Ø120 | Ø6,6 |
| 949520 | PLZ-i 50 | 66 | 52 | 52 | 60 | 53 | 70 | M5 |
| 949522 | PLZ-i 50 | 73 | 52 | 52 | 80 | 70,7 | 90 | M6 |
| 949524 | PLZ-i 50 | 73 | 52 | 52 | 73 | 70 | 90 | M6 |
| 949526 | PLZ-i 50 | 73 | 52 | 52 | 50 | 65 | 80 | M5 |
| 949527 | PLZ-i 50 | 75 | 52 | 52 | 80 | 100 | Ø120 | Ø6,6 |
| 949540 | PLZ-i 60 | 66 | 60 | 60 | 60 | 53 | 70 | M5 |
| 949542 | PLZ-i 60 | 81 | 60 | 60 | 80 | 70,7 | 90 | M6 |
| 949544 | PLZ-i 60 | 91 | 60 | 60 | 95 | 81,3 | 115 | M8 |
| 949547 | PLZ-i 60 | 75 | 60 | 60 | 50 | 65 | 80 | M5 |
| 949548 | PLZ-i 60 | 75 | 60 | 60 | 80 | 100 | Ø120 | Ø6,6 |
| 949560 | PLZ-i 80 | 86 | 80 | 80 | 80 | 70,7 | 90 | M6 |
| 949562 | PLZ-i 80 | 96 | 80 | 80 | 95 | 81,3 | 115 | M8 |
| 949566 | PLZ-i 80 | 86 | 80 | 80 | 50 | 46 | 80 | M5 |
| 949567 | PLZ-i 80 | 86 | 80 | 80 | 80 | 100 | Ø120 | Ø6,6 |

## Coupling

- Shaft connection without backlash
- Easy plug-in assembly

**Material:** Hub, aluminium
Gear ring, polyurethane



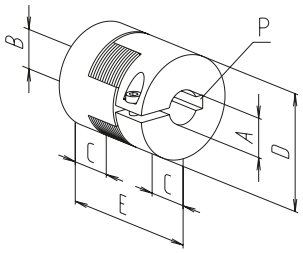


[mm]

| Code No. | A | B | C | D | E | P | Torque [Nm] | |
|---|---|---|---|---|---|---|---|---|
| | | | | | | | with feather key | without feather key |
| 9109200612 | 6 | 12 | 10 | 20 | 30 | 2 x 2/4 x 4 | 5 | 3 |
| 9109209510 | 9.5 | 10 | 10 | 20 | 30 | –/3 x 3 | 5 | 3 |
| 9109201011 | 10 | 11 | 10 | 22 | 30 | 3 x 3/4 x 4 | 5 | 3 |
| 9109201012 | 10 | 12 | 10 | 22 | 30 | 3 x 3/4 x 4 | 5 | 3 |
| 9114300611 | 6 | 11 | 11 | 30 | 35 | 2 x 2/4 x 4 | 12 | 6 |
| 9114300616 | 6 | 16 | 11 | 30 | 35 | 2 x 2/5 x 5 | 12 | 6 |
| 9114300811 | 8 | 11 | 11 | 30 | 35 | 2 x 2/4 x 4 | 12 | 6 |
| 9114300814 | 8 | 14 | 11 | 30 | 35 | 2 x 2/5 x 5 | 12 | 6 |
| 9114300816 | 8 | 16 | 11 | 30 | 35 | 2 x 2/5 x 5 | 12 | 6 |
| 9114309514 | 9.5 | 14 | 11 | 30 | 35 | –/5 x 5 | 12 | 6 |
| 9114301011 | 10 | 11 | 11 | 30 | 35 | 3 x 3/4 x 4 | 12 | 6 |
| 9114301012 | 10 | 12 | 11 | 30 | 35 | 3 x 3/4 x 4 | 12 | 6 |
| 9114301014 | 10 | 14 | 11 | 30 | 35 | 3 x 3/5 x 5 | 12 | 6 |
| 9114301016 | 10 | 16 | 11 | 30 | 35 | 3 x 3/5 x 5 | 12 | 6 |
| 9114301112 | 11 | 12 | 11 | 30 | 35 | 4 x 4/4 x 4 | 12 | 6 |
| 9114301114 | 11 | 14 | 11 | 30 | 35 | 4 x 4/5 x 5 | 12 | 6 |
| 9114301214 | 12 | 14 | 11 | 30 | 35 | 4 x 4/5 x 5 | 12 | 6 |
| 9114301216 | 12 | 16 | 11 | 30 | 35 | 2 x 2/5 x 5 | 12 | 6 |
| 9114301414 | 14 | 14 | 11 | 30 | 35 | 5 x 5/5 x 5 | 12 | 6 |
| 9114301416 | 14 | 16 | 11 | 30 | 35 | 5 x 5/5 x 5 | 12 | 6 |

RK ROSE+KRIEGER

## Coupling

[mm]

| Code No. | A | B | C | D | E | P | Torque [Nm] with feather key | Torque [Nm] without feather key |
|---|---|---|---|---|---|---|---|---|
| 9119400820 | 8 | 20 | 25 | 40 | 65 | 2 x 2/6 x 6 | 17 | 10 |
| 9119409520 | 9.5 | 20 | 25 | 40 | 65 | –/6 x 6 | 17 | 10 |
| 9119401012 | 10 | 12 | 25 | 40 | 65 | 2 x 2/4 x 4 | 17 | 10 |
| 9119401014 | 10 | 14 | 25 | 40 | 65 | 2 x 2/5 x 5 | 17 | 10 |
| 9119401020 | 10 | 20 | 25 | 40 | 65 | 2 x 2/6 x 6 | 17 | 10 |
| 9119401120 | 11 | 20 | 25 | 40 | 65 | 3 x 3/6 x 6 | 17 | 10 |
| 9119401212 | 12 | 12 | 25 | 40 | 65 | 4 x 4/4 x 4 | 17 | 10 |
| 9119401214 | 12 | 14 | 25 | 40 | 65 | 4 x 4/5 x 5 | 17 | 10 |
| 9119401219 | 12 | 19 | 25 | 40 | 65 | 4 x 4/6 x 6 | 17 | 10 |
| 9119401220 | 12 | 20 | 25 | 40 | 65 | 4 x 4/6 x 6 | 17 | 10 |
| 9119401414 | 14 | 14 | 25 | 40 | 65 | 5 x 5/5 x 5 | 17 | 10 |
| 9119401420 | 14 | 20 | 25 | 40 | 65 | 5 x 5/6 x 6 | 17 | 10 |
| 9119401416 | 14 | 16 | 25 | 40 | 65 | 5 x 5/5 x 5 | 17 | 10 |
| 9119401419 | 14 | 19 | 25 | 40 | 65 | 5 x 5/6 x 6 | 17 | 10 |
| 9119401620 | 16 | 20 | 25 | 40 | 65 | 5 x 5/6 x 6 | 17 | 10 |
| 9119401920 | 19 | 20 | 25 | 40 | 65 | 6 x 6/6 x 6 | 17 | 10 |
| 9119402020 | 20 | 20 | 25 | 40 | 65 | 6 x 6/6 x 6 | 17 | 10 |
| 9128551225 | 12 | 25 | 30 | 55 | 78 | 4 x 4/8 x 8 | 60 | 35 |
| 9128551425 | 14 | 25 | 30 | 55 | 78 | 5 x 5/8 x 8 | 60 | 35 |
| 9128551625 | 16 | 25 | 30 | 55 | 78 | 5 x 5/8 x 8 | 60 | 35 |
| 9128551925 | 19 | 25 | 30 | 55 | 78 | 6 x 6/8 x 8 | 60 | 35 |
| 9128552025 | 20 | 25 | 30 | 55 | 78 | 6 x 6/8 x 8 | 60 | 35 |
| 9128552525 | 25 | 25 | 30 | 55 | 78 | 8 x 8/8 x 8 | 60 | 35 |

## Holder for mechanical limit switch



- Limit switch can be moved and fixed axially
- Guide rail made of profile F-20 x 20
- Connecting cables can be laid in the profile slots

**Material:** Aluminium, anodised
Galvanised fastenings
**Scope of delivery:** Guide rail, spacer, 2 fixing plates, caps and fastenings

**Note:** The Code No. does not include the limit switch.
For limit switch, please see page 346.

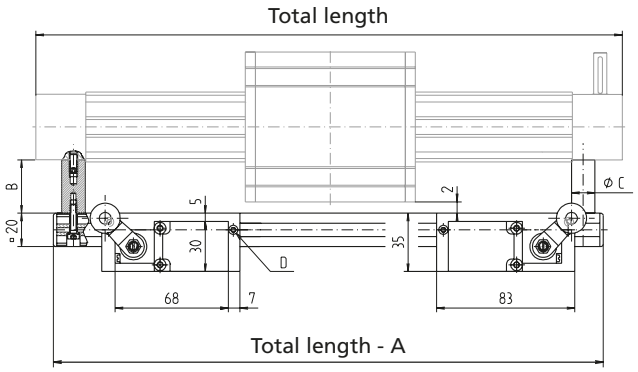


[mm]

| Code No. | Type | A | B | C | D |
|---|---|---|---|---|---|
| 92775 _ _ _ _ | PLZ 30 | 66 | 28 | 14 | M3 x 10 |
| 92776 _ _ _ _ | PLZ 40 | 80 | 38 | 16 | M3 x 10 |
| 92777 _ _ _ _ | PLZ 50 | 112 | 48 | 16 | M3 x 10 |
| 92778 _ _ _ _ | PLZ 60 | 140 | 52 | 16 | M3 x 10 |
| 92779 _ _ _ _ | PLZ 80 | 150 | 52 | 16 | M3 x 10 |

Total length of linear unit [mm]

---

- Fixing to guide profile using fixing plates
- Simple axial displacement and adjustment of holder is possible

**Material:** Aluminium, clear anodised
Galvanised fastenings

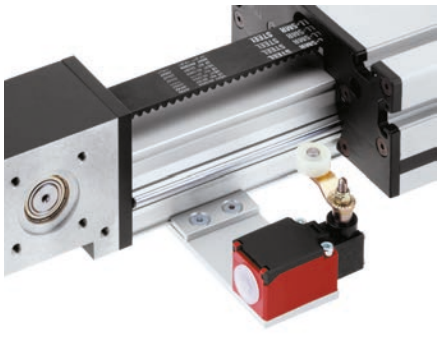

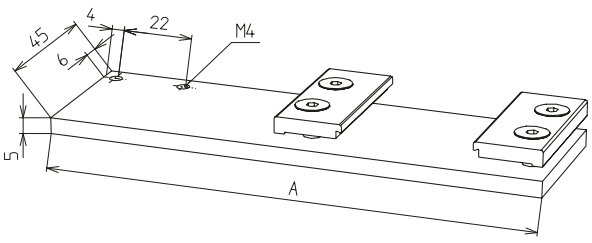


[mm]

| Code No. | Type | Version | A |
|---|---|---|---|
| 92784 | PLZ 30 | Holder with fastenings **without** limit switch | 110 |
| 92785 | PLZ 40 | | 130 |
| 92786 | PLZ 50 | | 150 |
| 92787 | PLZ 60 | | 177 |
| 92788 | PLZ 80 | | 197 |
| 91905 | all | Limit switches NC/NO contacts* | – |

*For technical data for the limit switch, please refer to page 346

RK ROSE+KRIEGER

## Holder for inductive limit switch



- Limit switch can be moved and fixed axially
- Guide rail made of profile F-20 x 20
- Connecting cables can be laid in the profile slots

**Material:** Aluminium, anodised
Galvanised fastenings
**Scope of delivery:** Guide rail, spacer, 2 fixing plates, caps and fastenings

**Note:** The Code No. does not include the limit switch.
For limit switch, please see page 346.

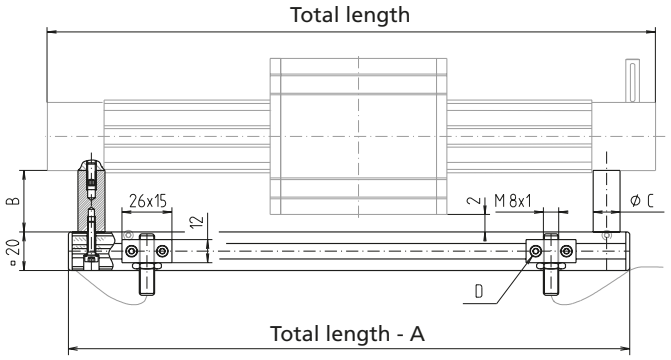


[mm]

| Code No. | Type | A | B | C | D |
|---|---|---|---|---|---|
| 92975 _ _ _ _ | PLZ 30 | 66 | 28 | 14 | M3 x 16 |
| 92976 _ _ _ _ | PLZ 40 | 80 | 38 | 16 | M3 x 16 |
| 92977 _ _ _ _ | PLZ 50 | 112 | 48 | 16 | M3 x 16 |
| 92978 _ _ _ _ | PLZ 60 | 140 | 52 | 16 | M3 x 16 |
| 92979 _ _ _ _ | PLZ 80 | 150 | 52 | 16 | M3 x 16 |

Total length of linear unit [mm]

---

- Clamping on guide profile
- Simple axial displacement and adjustment of holder is possible

**Material:** Aluminium, clear anodised,
Galvanised fastenings
**Scope of delivery:** Holder with fastenings **without** limit switch

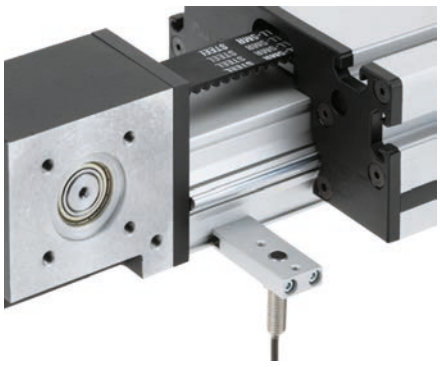

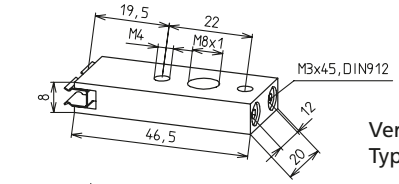


Version 1
Type 50-80

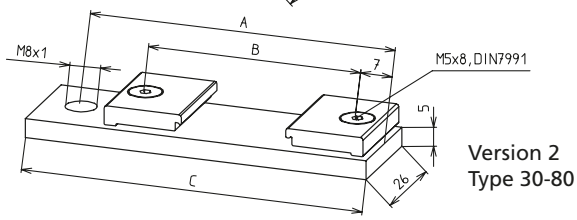


Version 2
Type 30-80

[mm]

| Code No. | Type | Version | A | B | C |
|---|---|---|---|---|---|
| 92990 | PLZ 30 | 2 | 64.5 | 46 | 74 |
| 92991 | PLZ 40 | 2 | 80 | 56 | 90 |
| 92992 | PLZ 50 | 2 | 96 | 66 | 106 |
| 92993 | PLZ 60 | 2 | 80 | 80 | 123.5 |
| 92994 | PLZ 80 | 2 | 133.5 | 100 | 143.5 |
| 92986 | PLZ 50-80 | 1 | – | – | – |

For limit switch, please see page 346.

## Mechanical limit switch

- Limit switch with angle lever
- Compact design

**Material:** Thermoplastic, fully insulated



| | |
|---|---|
| Max. voltage | 250 V AC |
| Max. switching current | 6 A |
| Max. starting current | 16 A |
| Operating cycles | Max. 6,000/h |
| Mechanical lifetime | 1 x $10^7$ switching cycles |
| Axis lever adjustment | locking by 360° |
| Protection class | IP 65 |
| Ambient temperature | -30°C to +80°C |

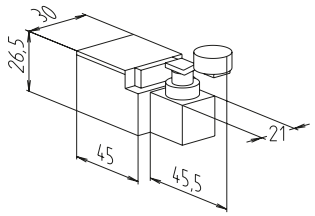


| Code No. | Type | Switching function |
|---|---|---|
| 91905 | PLZ 30-80 | NC/NO |
| 92767 | Fixing plate (same version as for limit switch holder on page 344, with fastenings) | |

## Inductive limit switch

- Function indicator (LED)
- Maintenance-free

**Material:** Housing: stainless steel



| Type | 30-80 |
|---|---|
| Voltage | 10 - 30 V DC |
| Max. switching current | 150 mA |
| Operating distance | 2 mm for steel |
| Protection class | IP 67 |
| Ambient temperature | -25°C to +70°C |
| Cable lengths | 2m |

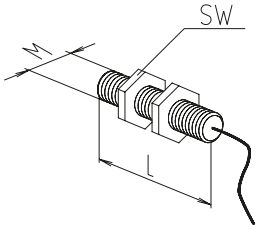


[mm]

| Code No. | Type | Switching function | L | M | Wrench size (SW) |
|---|---|---|---|---|---|
| 92826 | PLZ 30-80 | Changeover | 40 | 8x1 | 13 |
| 92967 | Fixing element (same version as for limit switch holder on page 345, with fastenings) | | | | |

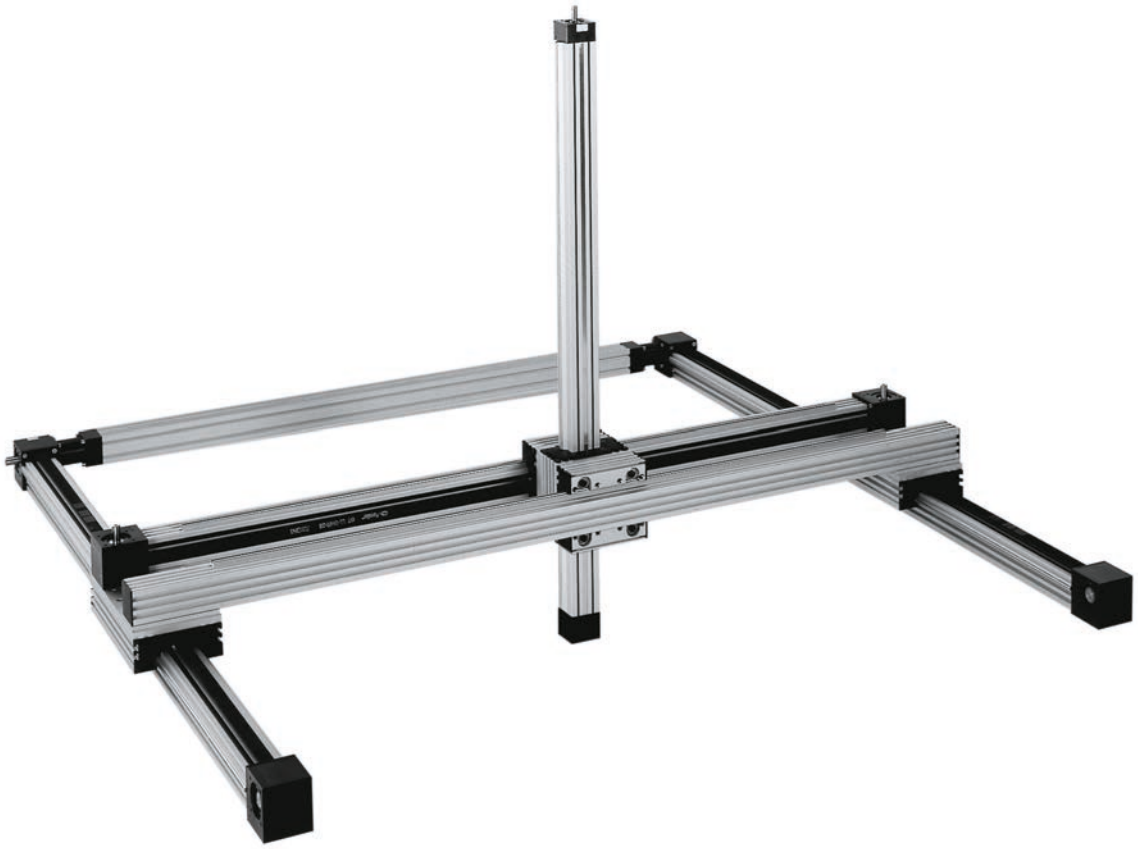

# Roller guide actuator/guides – SQ /SQZ

**Timing-belt unit with optimum connecting options due to slots in guide profile/carriage**

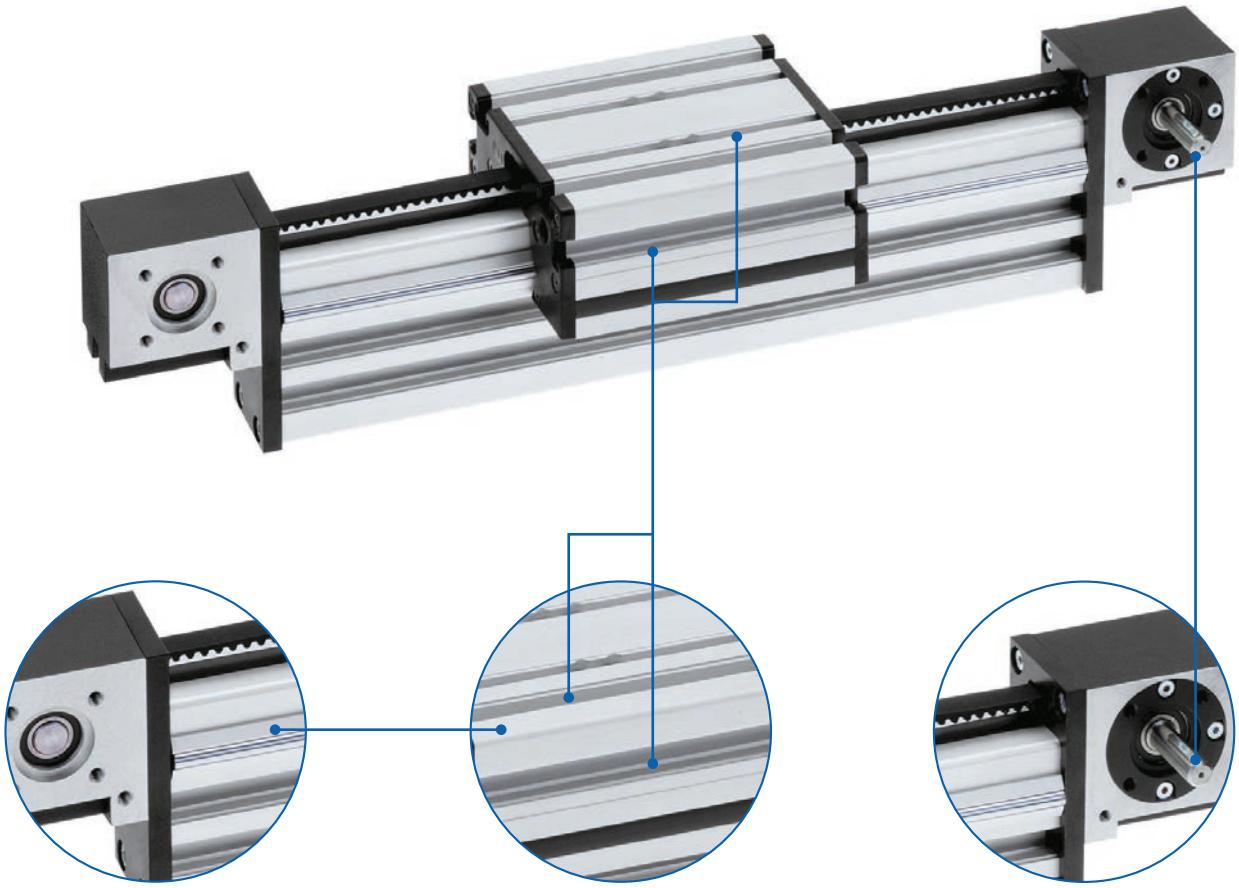

**Fixing slots**

✓ Easy fixing of linear actuator

✓ Simple connection of accessories

**Configuration of drive shaft**

✓ Either at one end or both

## Features:

- Sizes 30, 40, 40 x 80, 60, 60 x 120, 80 and 80 x 160 mm
- Guide profile made from the BLOCAN® modular profile system
- Extruded carriage with fixing slots
- Spring-mounted wiper system
- Roller cover

## Options:

- Longer stroke lengths
- Second non driven carriage
- Extended carriage

# SQ/SQZ - Table of contents


## Properties/Technical data

- General information/operating conditions ... 350
- Load data ... 351

## Versions
(Dimensions, order numbers)

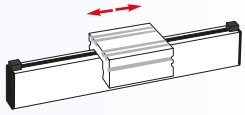

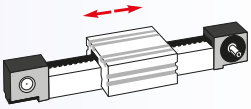

- SQ guide unit ... 352 - 353
- SQZ timing-belt unit ... 354 - 355

## Accessories

**Fixing**
- Slot stones ... 356

**Drive**
- Connecting/transmission unit ... 358 - 359
- Motor adaptor/couplings ... 360 - 362

**Position determination**
- Limit switches ... 364 - 365

# SQZ – Technical data

## General information/operating conditions

| | |
|---|---|
| Design | Profile, aluminium, timing-belt drive |
| Guide | Roller, external |
| Installation position | Any position |
| Repeatability | 0.05 mm |
| Ambient temperature | 0°C to +60°C |
| Protection class | IP 20 |

| Type | Timing-belt | Pitch/ width | Eff. diam. of lock washer [mm] | Max. input torque [Nm] | Max. speed [m/s] | Max. acceleration [m/s] |
|---|---|---|---|---|---|---|
| SQZ 30 | GT 5MR | 5/8 | 23.87 | 5 | 5 | 20 |
| SQZ 40 | GT 5MR | 5/11 | 27.06 | 8.5 | | |
| SQZ 40 x 80 | GT 5MR | 5/11 | 27.06 | 8.5 | | |
| SQZ 60 | GT 5MR | 5/25 | 44.56 | on request | 10 | |
| SQZ 60 x 120 | GT 5MR | 5/25 | 44.56 | on request | | |
| SQZ 80 | GT 8MR | 8/40 | 61.12 | 90 | | |
| SQZ 80 x 160 | GT 8MR | 8/28 | 61.12 | 55 | | |

## No-load torques

[Nm]

| Type | SQZ |
|---|---|
| 30 | 0.30 |
| 40 | 0.35 |
| 60 | 0.80 |
| 80 | 1.00 |

## Load data*

F Force [N]

M Moment [Nm]

I Geometric moment of inertia [$cm^4$]

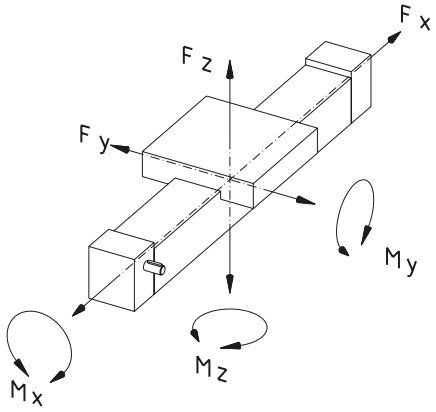


* With reference to carriage (static values, guide element resting on full surface)

| | Fx** | Fy | Fz | Mx | My | Mz |
|---|---|---|---|---|---|---|
| **SQ (guides)** | | | | | | |
| SQ 30 | – | 790 | 790 | 14 | 20 | 22 |
| SQ 40 | – | 1020 | 1020 | 23 | 33 | 33 |
| SQ 40 x 80 | – | 1020 | 1020 | 23 | 33 | 33 |
| SQ 60 | – | 2550 | 2550 | 99 | 143 | 143 |
| SQ 60 x 120 | – | 2550 | 2550 | 99 | 143 | 143 |
| SQ 80 x 40 | – | 2550 | 2550 | 124 | 168 | 169 |
| SQ 80 | – | 2550 | 2550 | 124 | 168 | 169 |
| SQ 80 x 160 | – | 2550 | 2550 | 124 | 168 | 169 |
| **SQZ linear unit** | | | | | | |
| SQZ 30 | 160 | 790 | 790 | 14 | 20 | 22 |
| SQZ 40 | 230 | 1020 | 1020 | 23 | 33 | 33 |
| SQZ 40 x 80 | 230 | 1020 | 1020 | 23 | 33 | 33 |
| SQZ 60 | 800 | 2550 | 2550 | 99 | 143 | 143 |
| SQZ 60 x 120 | 800 | 2550 | 2550 | 99 | 143 | 143 |
| SQZ 80 | 2810 | 2550 | 2550 | 124 | 168 | 169 |
| SQZ80 x 160 | 1900 | 2550 | 2550 | 124 | 168 | 169 |

** Initial tension of the timing belt 0,8 x Fx

## Geometric moment of inertia

[$cm^4$]

| Type | Iy | Iz |
|---|---|---|
| 30 | 3.4 | 3.4 |
| 40 | 11.3 | 11.3 |
| 40 x 80 | 19.4 | 76.0 |
| 60 | 51.2 | 51.2 |
| 60 x 120 | 94.7 | 372.3 |
| 80 x 40 | 76.0 | 19.4 |
| 80 | 155.3 | 155.3 |
| 80 x 160 | 292.4 | 1090.0 |

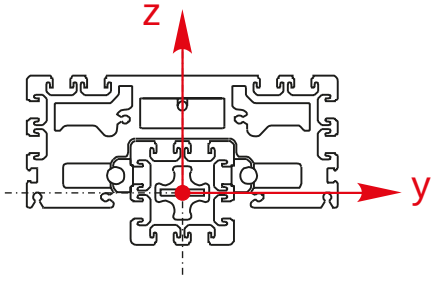

# SQ – Versions

**Order information:**

- Longer travel lengths on request
- Second or extended carriage available on request

## Version

## ■ Guide

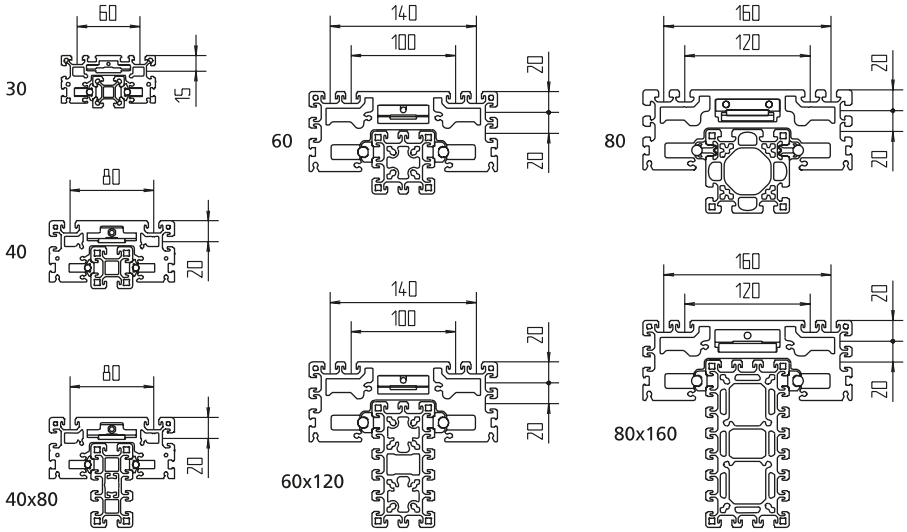




| Code No. | Type | Basic length | B | C | F | H | J | O |
|---|---|---|---|---|---|---|---|---|
| MDA3030AA | SQ II 30 | 148 | 90 | 50 | 4.5 | 30 | 102 | 30 |
| MDA4040AA | SQ II 40 | 180 | 120 | 65 | 6.5 | 40 | 132 | 40 |
| MDA4080AA | SQ II 40 x 80 | 180 | 120 | 105 | 46.5 | 80 | 132 | 40 |
| MDA6060AA | SQ II 60 | 240 | 180 | 98 | 21.5 | 60 | 192 | 60 |
| MDA6012AA | SQ II 60 x 120 | 240 | 180 | 158 | 81.5 | 120 | 192 | 60 |
| MDA8040AA | SQ II 80 x 40 | 260 | 200 | 78 | 1.5 | 40 | 212 | 80 |
| MRA8080AA | SQ III 80 | 260 | 200 | 118 | 41.5 | 80 | 212 | 80 |
| MDA8016AA | SQ II 80 x 160 | 260 | 200 | 198 | 121.5 | 160 | 212 | 80 |

_ _ _ _ Total length = basic length + travel [mm]

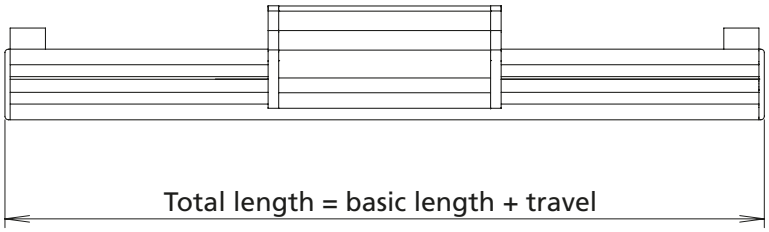


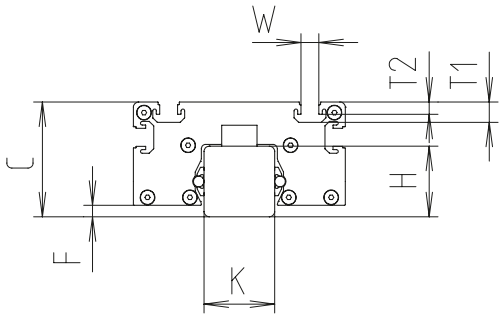


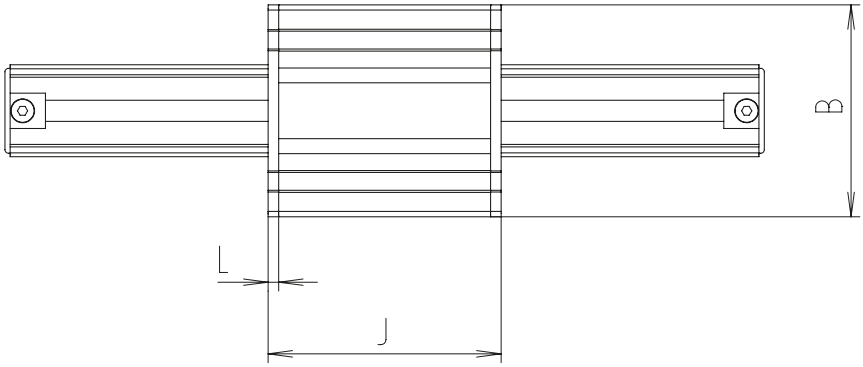


[mm]

| L | T1 | T2 | W | Max. travel | Mass [kg] | |
|---|---|---|---|---|---|---|
| | | | | | Basic length | per 100 mm travel |
| 6 | 8.5 | 4.5 | 10.1 | 5448 | 1.3 | 0.15 |
| 6 | 11.5 | 7 | 10.1 | 5418 | 2.1 | 0.22 |
| 6 | 11.5 | 7 | 10.1 | 5418 | 2.4 | 0.39 |
| 6 | 11.5 | 7 | 10.1 | 5768 | 5.6 | 0.50 |
| 6 | 11.5 | 7 | 10.1 | 5768 | 7.7 | 0.90 |
| 6 | 11.5 | 7 | 10.1 | 5748 | 6.9 | 0.57 |
| 6 | 11.5 | 7 | 10.1 | 5748 | 7.3 | 0.77 |
| 6 | 11.5 | 7 | 10.1 | 5748 | 8.9 | 1.39 |

# SQZ – Versions

**Order information:**

- Longer travel lengths on request
- Second non driven or extended carriage available on request

## Version

### ■ Timing-belt unit

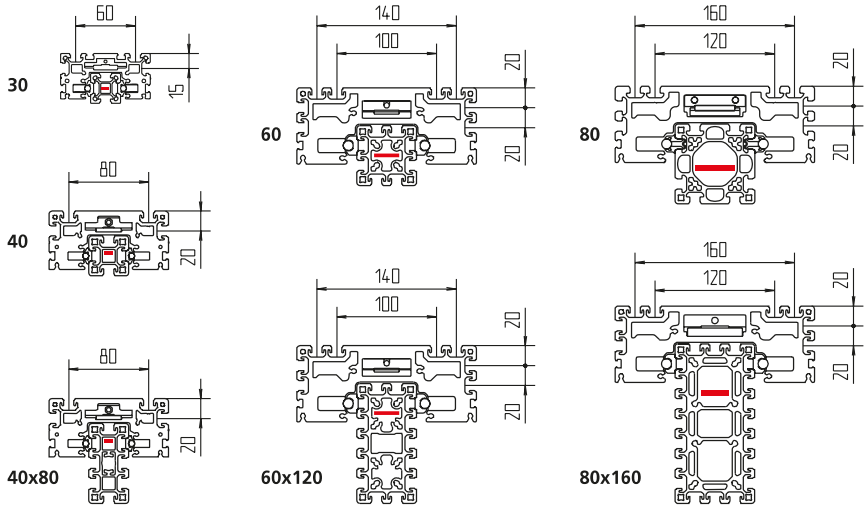


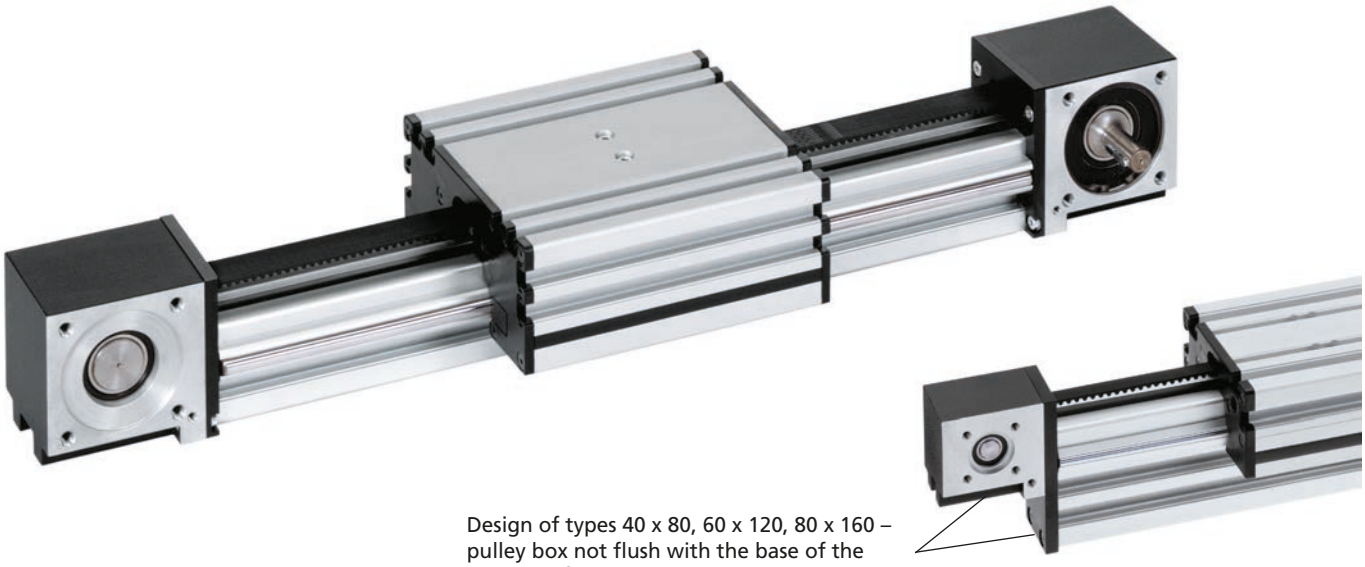

Design of types 40 x 80, 60 x 120, 80 x 160 – pulley box not flush with the base of the guide profile

| Code No. | Type | Timing-belt | Basic length | B | C | D1 | D2 | F | G1 | G2 | G3 | H | I | J |
|---|---|---|---|---|---|---|---|---|---|---|---|---|---|---|
| FEA3030 _ A | SQZ 30 | 5M-8 | 220 | 90 | 50 | 22H7 | 10 | 4.5 | M4 | M5 | M5 | 25.5 | 6 | 102 |
| FEA4040 _ A | SQZ 40 | 5M-11 | 270 | 120 | 65 | 28H7 | 10 | 6.5 | M5 | M6 | M5 | 35.1 | 8 | 132 |
| FEA4080 _ A | SQZ 40 x 80 | 5M-11 | 270 | 120 | 105 | 28H7 | 10 | 46.5 | M5 | M6 | M5 | 35.1 | 8 | 132 |
| FEA6060 _ A | SQZ 60 | 5M-25 | 391 | 180 | 98 | 70H7 | 15 | 21.5 | M8 | M8 | M5 | 52 | 8 | 192 |
| FEA6012 _ A | SQZ 60 x 120 | 5M-25 | 391 | 180 | 158 | 70H7 | 15 | 81.5 | M8 | M8 | M5 | 52 | 8 | 192 |
| TGA8080 _ A | SQZ 80 | 8M-40 | 428 | 200 | 118 | 70H7 | 25 | 41.5 | M8 | M8 | M5 | 66 | 10 | 212 |
| FFA8016 _ A | SQZ 80 x 160 | 8M-28 | 428 | 200 | 198 | 70H7 | 20 | 121.5 | M8 | M8 | M5 | 66 | 10 | 212 |

FFA8016 _ _ _ _ Total length = basic length + travel [mm]

FFA8016 _ A Configuration of drive shaft

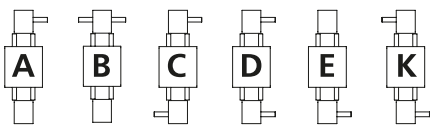

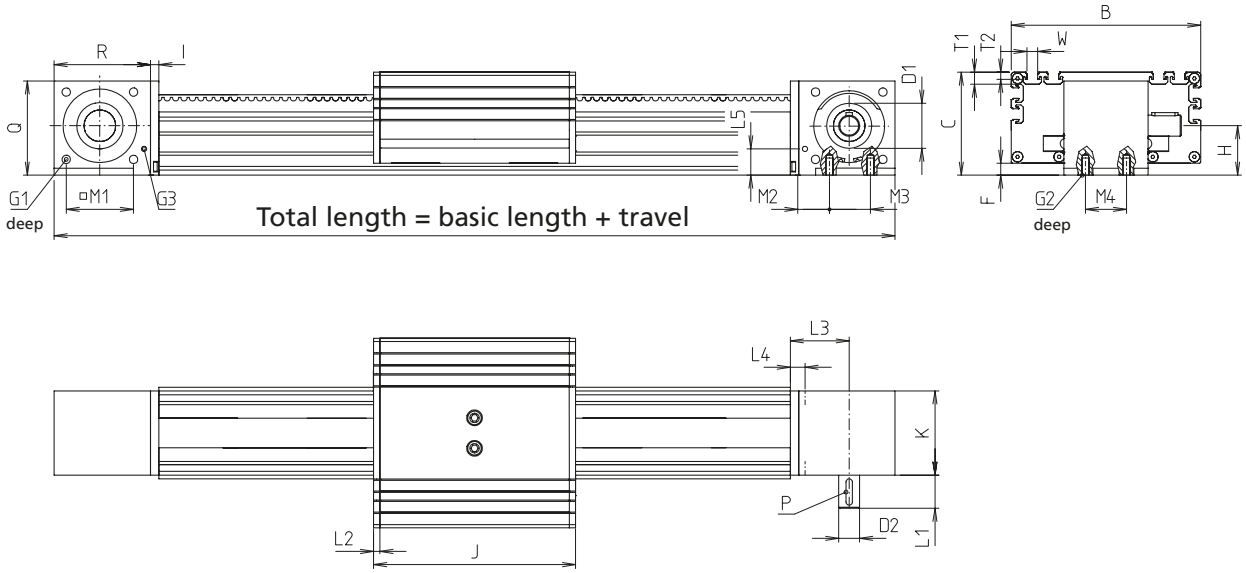


[mm]

| O | L1 | L2 | C | L4 | L5 | M1 | M2 | M3 | M4 | P | Q | R | T1 | T2 | W | Max. travel | Mass [kg] | |
|---|---|---|---|---|---|---|---|---|---|---|---|---|---|---|---|---|---|---|
| | | | | | | | | | | | | | | | | | Basic length | per 100 mm travel |
| 38 | 25 | 6 | 34 | 13 | 10 | 21 | 17 | 20 | 20 | 3 x 3 x 20 | 48 | 53 | 8.5 | 4.5 | 10.1 | 5898 | 1.23 | 0.17 |
| 48 | 28 | 6 | 40 | 16 | 15 | 29 | 20 | 20 | 20 | 3 x 3 x 20 | 61 | 61 | 11.5 | 7 | 10.1 | 5868 | 2.76 | 0.23 |
| 48 | 28 | 6 | 40 | 16 | 15 | 29 | 20 | 20 | 20 | 3 x 3 x 20 | 61 | 61 | 11.5 | 7 | 10.1 | 5868 | 3.09 | 0.41 |
| 80 | 31.5 | 6 | 56 | 16 | 29 | 64 | 30 | 40 | 40 | 5 x 5 x 25 | 94.5 | 91.5 | 11.5 | 7 | 10.1 | 5808 | 9.33 | 0.56 |
| 80 | 31.5 | 6 | 56 | 16 | 29 | 64 | 30 | 40 | 40 | 5 x 5 x 25 | 94.5 | 91.5 | 11.5 | 7 | 10.1 | 5808 | 10.67 | 0.94 |
| 100 | 31.5 | 6 | 63 | 18 | 29 | 64 | 35 | 40 | 40 | 8 x 7 x 25 | 109.5 | 98 | 11.5 | 7 | 10.1 | 5788 | 13.42 | 0.79 |
| 100 | 31.5 | 6 | 63 | 18 | 29 | 64 | 35 | 40 | 40 | 6 x 6 x 25 | 109.5 | 98 | 11.5 | 7 | 10.1 | 5788 | 16.08 | 1.40 |

**Order instruction:**

- **Purchase only in lot sizes and a multiple of that, see product table below**

- Slot stones can be inserted and positioned at the guide profile and carriage

**Material:** Galvanised steel

## Slot stones

**Slot stone -N-**



**Slot stone -N-**

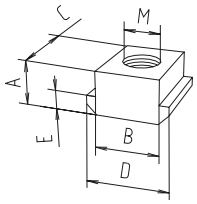


**Slot stone -N-**
can be slid into the slot

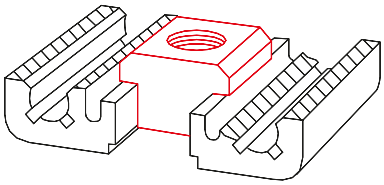

**Slot stone -K-**



**Slot stone -K-**

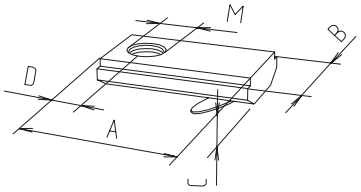


**Slot stone -K-**
can be swivelled into the slot

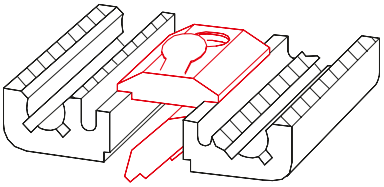

[mm] 


| Code No. | Type | lot sizes | Version | A | B | C | D | E | M | F [N] |
|---|---|---|---|---|---|---|---|---|---|---|
| **Slot stone -N-** | | | | | | | | | | |
| 4006201 | SQZ 30 | 10, 20, 30... pcs | M5 | 5 | 10 | 13 | 13 | 3 | M5 | 4000 |
| 4006203 | SQZ 30 | 10, 20, 30... pcs | M6 | 5 | 10 | 13 | 13 | 3 | M6 | 4000 |
| 4006202 | SQZ 30 | 10, 20, 30... pcs | M8 | 5 | 10 | 13 | 13 | 3 | M8 | 4000 |
| 4026207 | SQZ 40-80 | 10, 20, 30... pcs | M5 | 8 | 10 | 13 | 15 | 4 | M5 | 4000 |
| 4026203 | SQZ 40-80 | 10, 20, 30... pcs | M6 | 8 | 10 | 13 | 15 | 4 | M6 | 9000 |
| 4026206 | SQZ 40-80 | 10, 20, 30... pcs | M8 | 8 | 10 | 13 | 15 | 4 | M8 | 9000 |
| **Slot stone -K-** | | | | | | | | | | |
| 4006211 | all | 10, 20, 30... pcs | M5 | 21 | 12 | 4 | 7 | – | M5 | 5000 |
| 4006212 | all | 10, 20, 30... pcs | M6 | 21 | 12 | 4 | 7 | – | M6 | 5000 |
| 4006213 | all | 10, 20, 30... pcs | M8 | 21 | 12 | 4 | 7 | – | M8 | 5000 |
| 4016212 | SQZ 40-80 | 10, 20, 30... pcs | M6 | 21 | 14 | 4 | 7 | – | M6 | 5000 |
| 4016213 | SQZ 40-80 | 10, 20, 30... pcs | M8 | 21 | 14 | 4 | 7 | v | M8 | 8000 |



3-axis portal system of a machining centre

## Connecting adaptor 30-40



- Connecting piece between linear unit and transmission unit

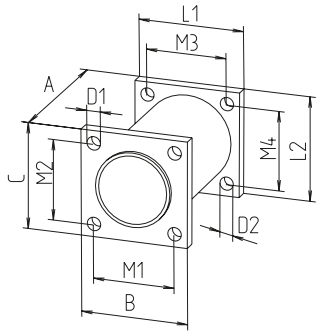


**Material:**
Aluminium, black anodised
Fastenings, galvanised
**Scope of delivery:**
Adaptor with fastenings

[mm]

| Code No. | Type | A | B | C | D1 | D2 | L1 | L2 | M1 | M2 | M3 | M4 |
|---|---|---|---|---|---|---|---|---|---|---|---|---|
| 91305 | 30 | 62 | 30 | 30 | 4.3 | 4.3 | 48 | 30 | 21 | 21 | 21 | 21 |
| 91306 | 40 | 68 | 40 | 40 | 5.4 | 5.4 | 40 | 40 | 29 | 29 | 29 | 29 |

## Connecting and transmission unit 30-40



- Transmission of torques or as connecting unit between two parallel linear units

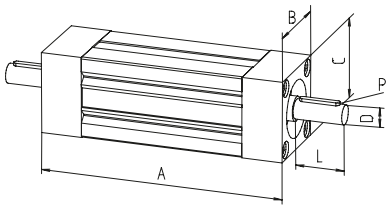


**Material:** Aluminium, anodised

[mm]

| Code No. | Type | A (basic length) | B | C | D | L | P |
|---|---|---|---|---|---|---|---|
| 92503_ _ _ _ | Transmission unit 30 | 60 | 30 | 30 | 8 | 25 | 2 x 2 x 20 |
| 92513_ _ _ _ | Connecting unit 30 | 60 | 30 | 30 | – | – | – |
| 92504_ _ _ _ | Transmission unit 40 | 80 | 40 | 40 | 10 | 28 | 3 x 3 x 20 |
| 92514_ _ _ _ | Connecting unit 40 | 80 | 40 | 40 | – | – | – |

Length [mm]

## Coupling for transmission unit 30-40



- Shaft connection without back-lash
- Easy plug-in assembly

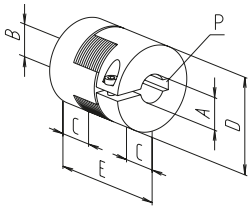


**Material:** Hub, aluminium
Gear ring, polyurethane

[mm]

| Code No. | Type | A | B | C | D | E | P | Torque [Nm] with feather key | Torque [Nm] without feather key |
|---|---|---|---|---|---|---|---|---|---|
| 9109200810 | SQZ 30 | 8 | 10 | 10 | 20 | 30 | 2x2 / 3x3 | 5 | 3 |
| 9109201010 | SQZ 40 | 10 | 10 | 10 | 20 | 30 | 3x3 / 3x3 | 5 | 3 |

## Transmission unit 60-80

- Transmission of high torques up to 120 Nm on parallel linear units
- Synchronisation of carriages via zero point alignment

### Synchronous version

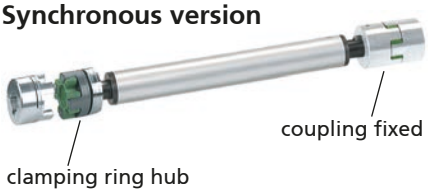


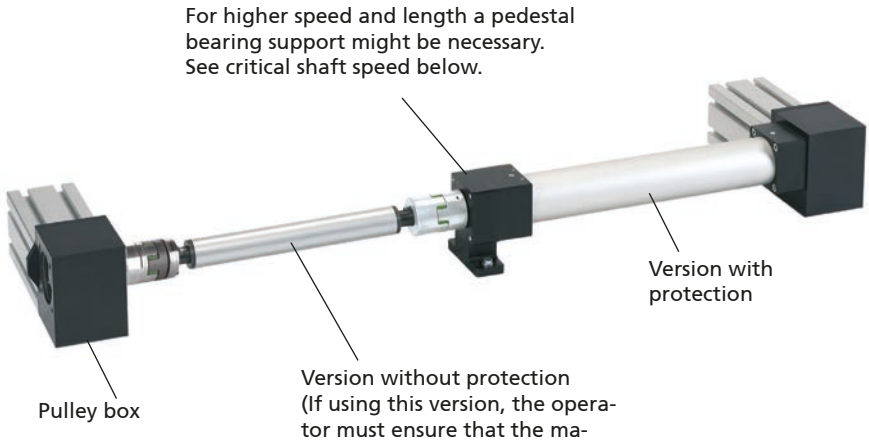


### Critical shaft speed:

max. unsupported length [mm] = (2720 - speed [rpm]) + 2 x 107.5

max. speed [rpm] = 2720 - L [mm]

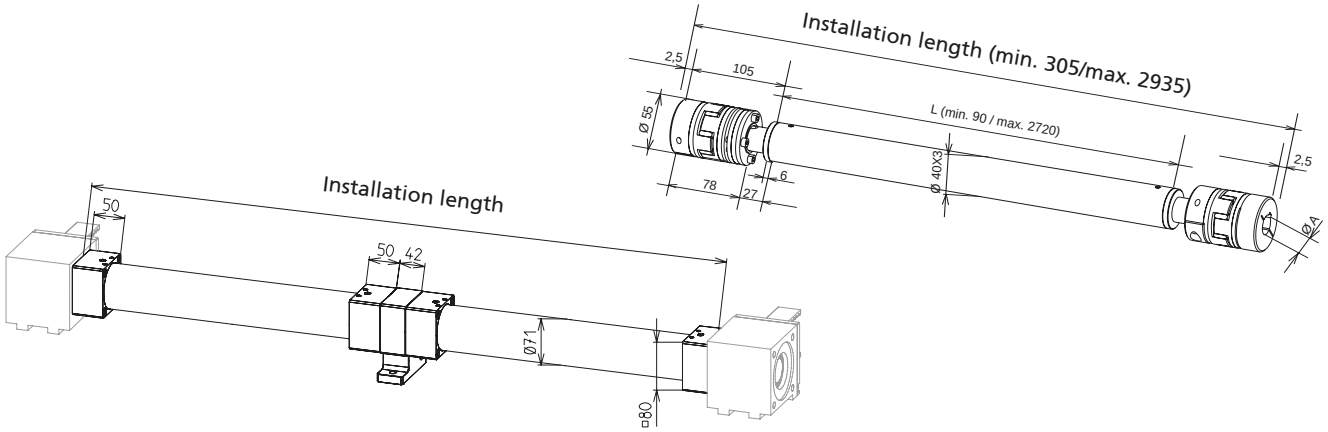


[mm]

| Code No. | Version | for linear unit | A [mm] | Weight [kg] | | |
|---|---|---|---|---|---|---|
| | | | | 1000 mm | /100 mm | Pedestal bearing support |
| 9252046 _ _ _ _ _ | Without protection | SQZ 60x102 | 15 | 5.23 | 0.23 | 1.4 |
| 9252146 _ _ _ _ _ | With protection | SQZ 60x120 | 15 | 8.56 | 0.4 | 1.4 |
| 9252048 _ _ _ _ _ | Without protection | SQZ 80 | 25 | 5.23 | 0.23 | 1.5 |
| 9252148 _ _ _ _ _ | With protection | SQZ 80 | 25 | 8.56 | 0.4 | 1.5 |
| 9252036 _ _ _ _ _ | Without protection | SQZ 80x160 | 20 | 5.23 | 0.23 | 1.4 |
| 9252136 _ _ _ _ _ | With protection | SQZ 80x160 | 20 | 8.56 | 0.4 | 1.4 |

Installation length [mm]

2 = without pedestal bearing support
3 = with pedestal bearing support

## Selection table - motor adaptor/coupling

| Type | Servo motors without gear | | | Servo motors with gear | | | Three-phase motor | |
|---|---|---|---|---|---|---|---|---|
| | RK-AC 118 | RK-AC 240 | RK-AC 470 | RK-AC 112 | RK-AC 260<br>RK-AC 280 | RK-AC 345 | 90/120W | 180/250 W |
| SQZ 30 | 949215 | – | – | – | – | – | 94995 | – |
| | 911430 1011 | – | – | – | – | – | 910920<br>1012 | – |
| SQZ 40<br>40x80 | 949216 | 949235 | – | 949438 | 949439 | – | 94987 | 94988 |
| | 911430 1011 | 911430 1014 | – | 911430 1014 | 911940<br>1020 | – | 911430<br>1012 | 911430<br>1014 |
| SQZ 60<br>60x120 | 949217 | 949236 | 949245 | 949440 | 949441 | 949442 | 949029 | 949030 |
| | 911430 1115 | 911940 1415 | 911430<br>1519 | 911940 1415 | 911940<br>1520 | 912855<br>1519 | 911940<br>1215 | 911940<br>1415 |
| SQZ 80 | – | 949683 | 949687 | 949681 | 949685 | 949686 | 949695 | 949697 |
| | – | 912855 1425 | 912855<br>1925 | 912855 1425 | 912855<br>2025 | 912855<br>2525 | 912855<br>1225 | 912855<br>1425 |
| SQZ<br>80x160 | – | 949237 | 949246 | 949443 | 949444 | 949445 | 94956 | 94950 |
| | – | 911940 1420 | 911940<br>1920 | 912855 1420 | 912855<br>2020 | 912855<br>2025 | 911940<br>1220 | 911940<br>1420 |

Code No. Motor adaptor:
**949237**

Code No. Coupling with specification of shaft diameter
1st end = 14 mm
2nd end = 14 mm:
**911940 1414**

**Note:**
For further details on motor versions, please refer to the chapter "Motors and controls"

## Motor adaptor

- Simple assembly
- Exact fit due to centring shoulders

**Material:**
Aluminium, black anodised

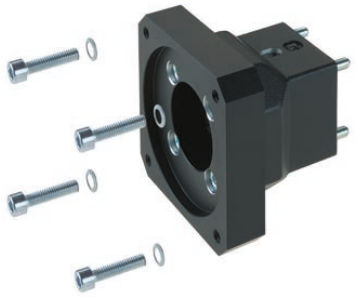

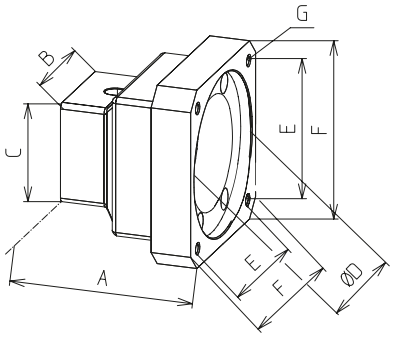


[mm]

| Code No. | Type | A | B | C | D | E | F | G |
|---|---|---|---|---|---|---|---|---|
| 949215 | 30 | 63 | 40 | 40 | 60 | 53 | 70 | M5 |
| 94995 | 30 | 65 | 40 | 40 | 50 | 46 | 80 | M5 |
| 949438 | 40 | 75 | 50 | 50 | 40 | 53 | 70 | Ø5,5 |
| 949216 | 40 | 65 | 50 | 50 | 60 | 53 | 70 | M5 |
| 949235 | 40 | 73 | 50 | 50 | 80 | 70,7 | 90 | M6 |
| 949439 | 40 | 93 | 50 | 50 | 60 | 70,7 | 90 | Ø5,5 |
| 94987 | 40 | 73 | 50 | 50 | 50 | 46 | 80 | M5 |
| 94988 | 40 | 73 | 50 | 50 | 80 | 100 | Ø120 | Ø6,6 |
| 949440 | 60,60x120 | 84 | 80 | 80 | 40 | 53 | 70 | Ø5,5 |
| 949217 | 60,60x120 | 67,5 | 80 | 80 | 60 | 53 | 70 | M5 |
| 949236 | 60,60x120 | 79 | 80 | 80 | 80 | 70,7 | 90 | M6 |
| 949441 | 60,60x120 | 89 | 80 | 80 | 60 | 70,7 | 90 | Ø5,5 |
| 949442 | 60,60x120 | 114 | 80 | 80 | 80 | 91,9 | 115 | M8 |
| 949245 | 60,60x120 | 86 | 80 | 80 | 95 | 81,3 | 115 | M8 |
| 949029 | 60,60x120 | 79 | 80 | 80 | 50 | 46 | 80 | M5 |
| 949030 | 60,60x120 | 79 | 80 | 80 | 80 | 100 | Ø120 | Ø6,6 |
| 949681 | 80 | 99 | 80 | 80 | 40 | 53 | 70 | Ø5,5 |
| 949683 | 80 | 86 | 80 | 80 | 80 | 70,7 | 90 | M6 |
| 949685 | 80 | 96 | 80 | 80 | 60 | 70,7 | 70 | Ø6,6 |
| 949686 | 80 | 111 | 80 | 80 | 80 | 91,9 | 115 | Ø9 |
| 949687 | 80 | 96 | 80 | 80 | 95 | 81,3 | 115 | M8 |
| 949695 | 80 | 89 | 80 | 80 | 50 | 46 | 80 | M5 |
| 949697 | 80 | 86 | 80 | 80 | 80 | 100 | Ø120 | Ø6,6 |
| 949443 | 80x160 | 99 | 80 | 80 | 40 | 53 | 70 | Ø5,5 |
| 949237 | 80x160 | 79 | 80 | 80 | 80 | 70,7 | 90 | M6 |
| 949444 | 80x160 | 96 | 80 | 80 | 60 | 70,7 | 90 | Ø6,6 |
| 949445 | 80x160 | 111 | 80 | 80 | 80 | 91,9 | 115 | M8 |
| 949246 | 80x160 | 89 | 80 | 80 | 95 | 81,3 | 115 | M8 |
| 94956 | 80x160 | 79 | 80 | 80 | 50 | 46 | 80 | M5 |
| 94950 | 80x160 | 79 | 80 | 80 | 80 | 100 | Ø120 | Ø6,6 |

## Coupling

- Shaft connection without backlash
- Easy plug-in assembly

**Material:** Hub, aluminium
Gear ring, polyurethane



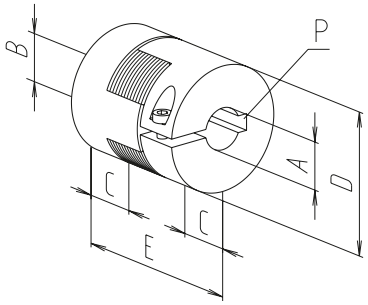


[mm]

| Code No. | A | B | C | D | E | P | Torque [Nm] | |
|---|---|---|---|---|---|---|---|---|
| | | | | | | | with feather key | without feather key |
| 9109209510 | 9,5 | 10 | 10 | 20 | 30 | – / 3x3 | 5 | 3 |
| 9109201012 | 10 | 12 | 10 | 22 | 30 | 3x3 / 4x4 | 5 | 3 |
| 9114309510 | 9,5 | 10 | 11 | 30 | 35 | – / 3x3 | 12 | 6 |
| 9114301011 | 10 | 11 | 11 | 30 | 35 | 3x3 / 4x4 | 12 | 6 |
| 9114301012 | 10 | 12 | 11 | 30 | 35 | 3x3 / 4x4 | 12 | 6 |
| 9114301014 | 10 | 14 | 11 | 30 | 35 | 3x3 / 5x5 | 12 | 6 |
| 9114301115 | 11 | 15 | 11 | 30 | 35 | 4x4 / 5x5 | 12 | 6 |
| 9114301519 | 15 | 19 | 11 | 30 | 35 | 5x5 / 6x6 | 12 | 6 |
| 9119409515 | 9,5 | 15 | 25 | 40 | 65 | – / 5x5 | 17 | 10 |
| 9119401215 | 12 | 15 | 25 | 40 | 65 | 4x4 / 5x5 | 17 | 10 |
| 9119401220 | 12 | 20 | 25 | 40 | 65 | 4x4 / 6x6 | 17 | 10 |
| 9119401415 | 14 | 15 | 25 | 40 | 65 | 5x5 / 5x5 | 17 | 10 |
| 9119401420 | 14 | 20 | 25 | 40 | 65 | 5x5 / 6x6 | 17 | 10 |
| 9119401920 | 19 | 20 | 25 | 40 | 65 | 6x6 / 6x6 | 17 | 10 |
| 9128551225 | 12 | 25 | 30 | 55 | 78 | 4x4 / 8x7 | 60 | 35 |
| 9128551420 | 14 | 20 | 30 | 55 | 78 | 5x5 / 6x6 | 60 | 35 |
| 9128551425 | 14 | 25 | 30 | 55 | 78 | 5x5 / 8x7 | 60 | 35 |
| 9128551925 | 19 | 25 | 30 | 55 | 78 | 6x6 / 8x7 | 60 | 35 |
| 9128552020 | 20 | 20 | 30 | 55 | 78 | 6x6 / 6x6 | 60 | 35 |




Headlight adjustment system

# SQZ – Position determination

## Holder for mechanical limit switch

**Note:** The Code No. does not include the limit switch.
For limit switch, please see page 365.



- Limit switch can be moved and fixed axially
- Guide rail made of profile F-20 x 20
- Connecting cables can be placed in the profile slots

**Material:** Aluminium, anodised
Galvanised fastenings
**Scope of delivery:** Guide rail, spacer, 2 fixing plates, caps and fastenings

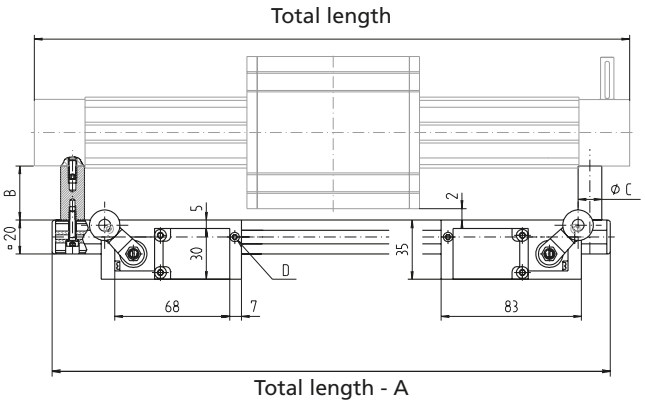


[mm]

| Code No. | Type | A | B | C | D |
|---|---|---|---|---|---|
| 92780 _ _ _ _ | SQZ 30 | 66 | 28 | 14 | M3 x 10 |
| 92781 _ _ _ _ | SQZ 40 | 80 | 38 | 16 | M3 x 10 |
| 92782 _ _ _ _ | SQZ 60 | 140 | 52 | 16 | M3 x 10 |
| 92783 _ _ _ _ | SQZ 80 | 150 | 52 | 16 | M3 x 10 |

Total length of linear unit [mm]

## Holder for inductive limit switch

**Note:** The Code No. does not include the limit switch.
For limit switch, please see page 365.



- Limit switch can be moved and fixed axially
- Guide rail made of profile F-20 x 20
- Connecting cables can be laid in the profile slots

**Material:** Aluminium, anodised
Galvanised fastenings
**Scope of delivery:** Guide rail, spacer, 2 fixing plates, caps and fastenings

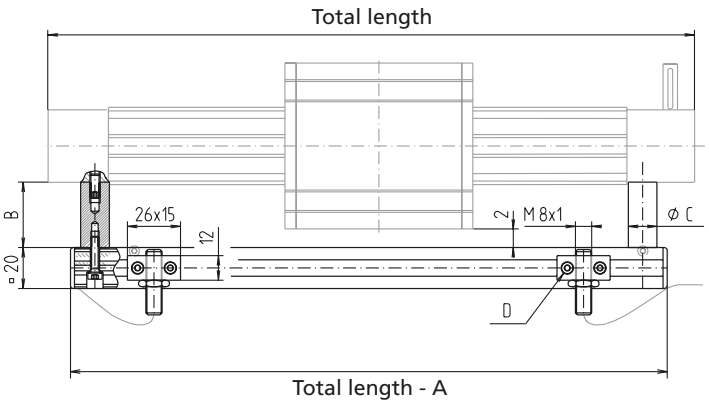


[mm]

| Code No. | Type | A | B | C | D |
|---|---|---|---|---|---|
| 92980 _ _ _ _ | SQZ 30 | 66 | 28 | 14 | M3 x 16 |
| 92981 _ _ _ _ | SQZ 40 | 80 | 38 | 16 | M3 x 16 |
| 92982 _ _ _ _ | SQZ 60 | 140 | 52 | 16 | M3 x 16 |
| 92983 _ _ _ _ | SQZ 80 | 150 | 52 | 16 | M3 x 16 |

Total length of linear unit [mm]

## Holder for inductive limit switch

For technical data of the limit switch, please refer to the next page

- Fixing bracket for limit switches
- Fixing in the profile slot of the guide profile
- Simple axial displacement and adjustment of holder is possible

**Material:** AlMgSi, vibratory finished

**Scope of delivery:** Holder with fastenings

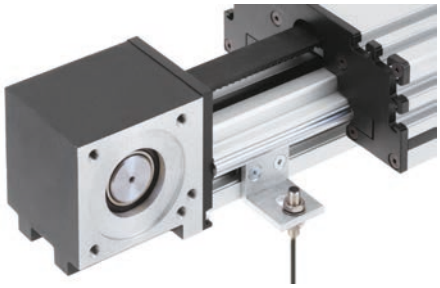

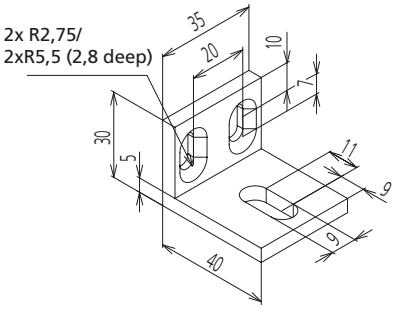


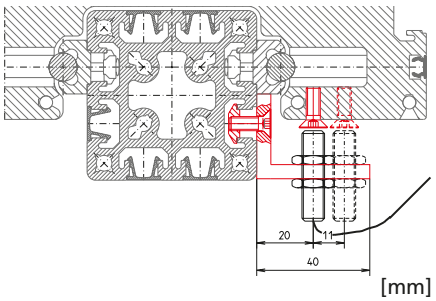


[mm]

The Order No. does not include the limit switch! (see below)

| Code No. | Type |
|---|---|
| 92909 | SQZ- 40 x 80, 60, 60 x 120, 80, 80 x 160 |

## Mechanical limit switch

- Limit switch with angle lever
- Compact design

**Material:** Thermoplastic, fully insulated



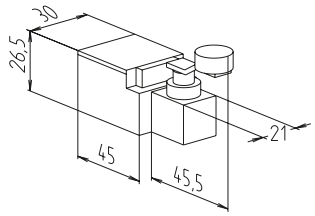


| | |
|---|---|
| Max. voltage | 250 V AC |
| Max. switching current | 6 A |
| Max. starting current | 16 A |
| Operating cycles | Max. 6,000/h |
| Mechanical lifetime | 1 x $10^7$ switching cycles |
| Axis lever adjustment | locking by 360° |
| Protection class | IP 65 |
| Ambient temperature | -30°C to +80°C |

| Code No. | Type | Switching function |
|---|---|---|
| 91905 | SQZ 30-80 | NC/NO |
| 92767 | Fixing plate (same version as for limit switch holder on page 364, with fastenings) | |

## Inductive limit switch

- Function indicator (LED)
- Maintenance-free

**Material:** Housing: stainless steel



| Type | 30-80 |
|---|---|
| Voltage | 10 - 30 V DC |
| Max. switching current | 150 mA |
| Operating distance | 2 mm for steel |
| Protection class | IP 67 |
| Ambient temperature | -25°C to +70°C |
| Cable lengths | 2m |

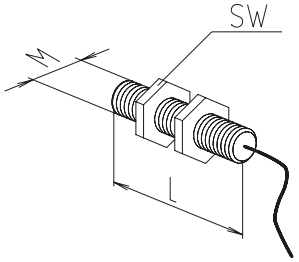


[mm]

| Code No. | Type | Switching function | L | M | Wrench size (SW) |
|---|---|---|---|---|---|
| 92826 | SQZ 30-80 | Changeover | 40 | 8x1 | 13 |
| 92967 | Fixing element (same version as for limit switch holder on page 364 - with fastenings) | | | | |

# Roller guide actuators/guides – LM/LMZ

## Robust linear actuator that takes high moments and forces

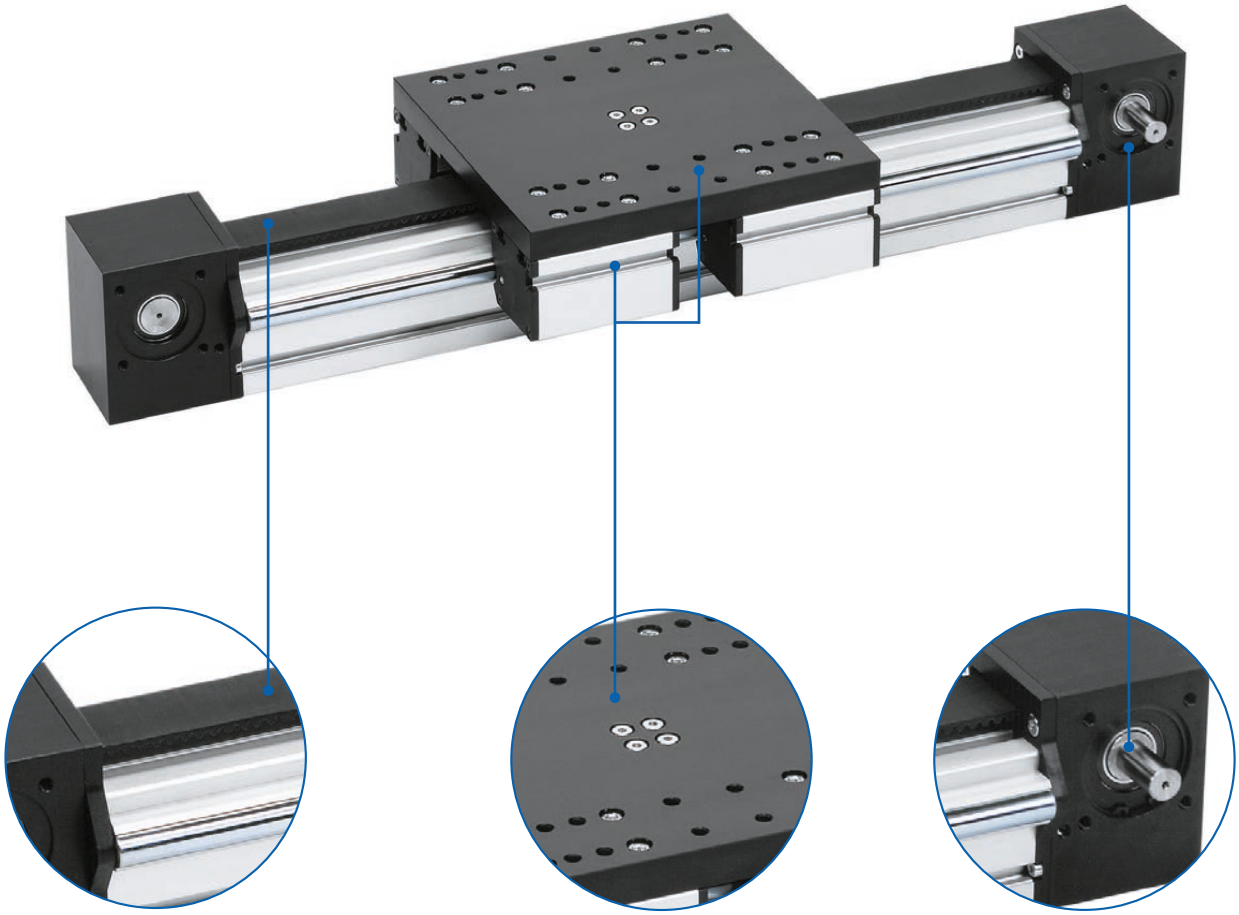

**Wide timing-belt**
✓ Transmission of large axial forces

**Large fixing plate**
✓ Simple connection of attachments
✓ Enables high moments

**Configuration of drive shaft**
✓ Freely configurable acc. to your requirements

### Features:

- Simple, robust and cost-effective design
- Guide profile from BLOCAN® F-100 x 100
- Timing-belt with a width of 50 mm
- Guide shafts diam. 20 mm
- Roller modules with external lubrication and wipers

### Options:

- Second non driven carriage
- Longer stroke lengths

# LM/LMZ - Table of contents


## Properties/Technical data

- General information/operating conditions ... 368
- Load data ... 369

## Versions
(Dimensions, order numbers)

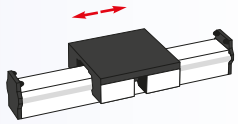

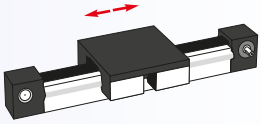

- LM guide unit ... 370 - 371
- LMZ timing-belt unit ... 372 - 373

## Accessories

**Fixing**
- Slot stones ... 374

**Drive**
- Transmission unit ... 375
- Motor adaptor/couplings ... 376

**Position determination**
- Limit switches ... 377

# LMZ – Technical data

## General information/operating conditions

| | |
|---|---|
| Design | Aluminium profile, timing-belt drive |
| Guide | Roller with individual modules, external |
| Installation position | Any position |
| Repeat accuracy | 0.05 mm |
| Ambient temperature | 0°C to +60°C |
| Protection class | IP 20 |

| Type | Toothed belt | Pitch/ width | Eff. diam pulley [mm] | Max. input torque [Nm] | Max. speed [m/s] | Max. acceleration [m/s] |
|---|---|---|---|---|---|---|
| LMZ 100 | GT 8MR | 8/50 | 61.12 | 90 | 10 | 20 |

## No-load torque

[Nm]

| Type | No-load torque |
|---|---|
| LMZ 100 | 1.20 |

## Load data*

F Force [N]

M Moment [Nm]

I Geometric moment of inertia [$cm^4$]

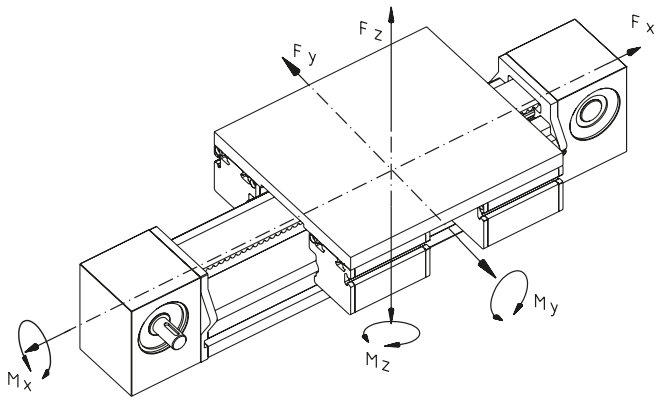


* With reference to carriage (static values, guide element resting on full surface)

| | Fx** | Fy*** | Fz*** | Mx | My | Mz |
|---|---|---|---|---|---|---|
| **LM (guide roller unit)** | | | | | | |
| **LM 100** | – | 7000 | 7000 | 441 | 609 | 609 |
| **LMZ with external timing-belt** | | | | | | |
| **LMZ 100** | 3400 | 7000 | 7000 | 441 | 609 | 609 |

** The design should incorporate appropriate safety factors for these values, depending on application.
Initial tension of the timing belt 0,8 x Fx

*** Force evenly distributed on the carriage and fixed

## Geometric moment of inertia

[$cm^4$]

| Type | Iy | Iz |
|---|---|---|
| LMZ 100 | 304 | 304 |

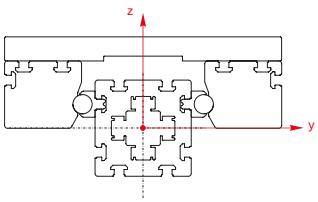

# LM – Versions

**Order information:**

- Longer travel lengths on request
- Second carriage available

**Version** ■ **Guide**



[mm]

| Code No. | Type | Basic length | Max. travel | Mass [kg] | |
|---|---|---|---|---|---|
| | | | | Basic length | per 100 mm travel |
| MNA1010AL | LM 100 | 356 | 5670 | 16.4 | 3.11 |

_ _ _ _ Total length = basic length + travel [mm]

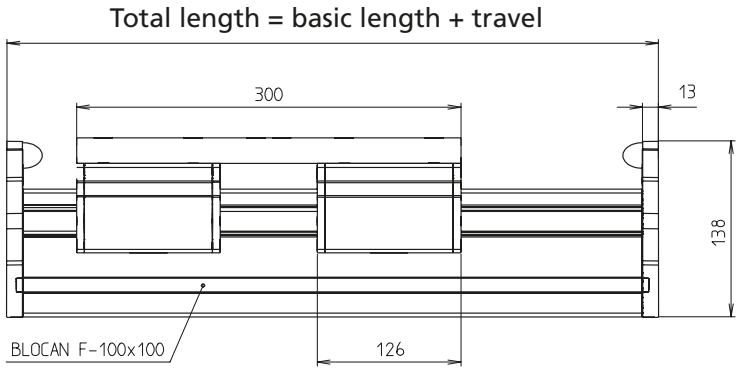
Total length = basic length + travel
300
13
138
126
BLOCAN F-100x100

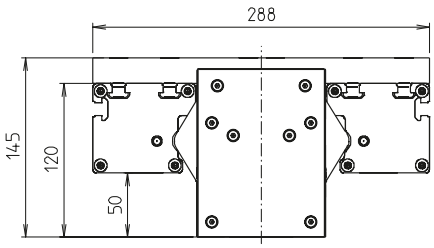
288
145
120
50

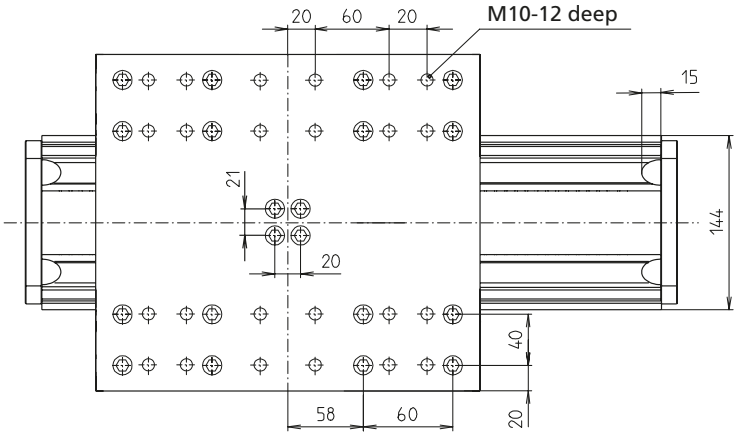
20
60
20
M10-12 deep
15
21
144
20
40
58
60
20

# LMZ – Versions

**Order information:**

- Longer travel lengths on request
- Second non driven carriage available on request

**Version** ■ **Timing-belt unit**



[mm]

| Code No. | Type | Timing-belt | Basic length | Max. travel | Mass [kg] | |
|---|---|---|---|---|---|---|
| | | | | | Basic length | per 100 mm travel |
| FDA1010 _ L | LMZ 100 | GT8 MR-50 | 516 | 5700 | 22.8 | 1.47 |

_ _ _ _ Total length = basic length + travel [mm]

Configuration of drive shaft

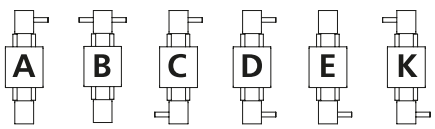

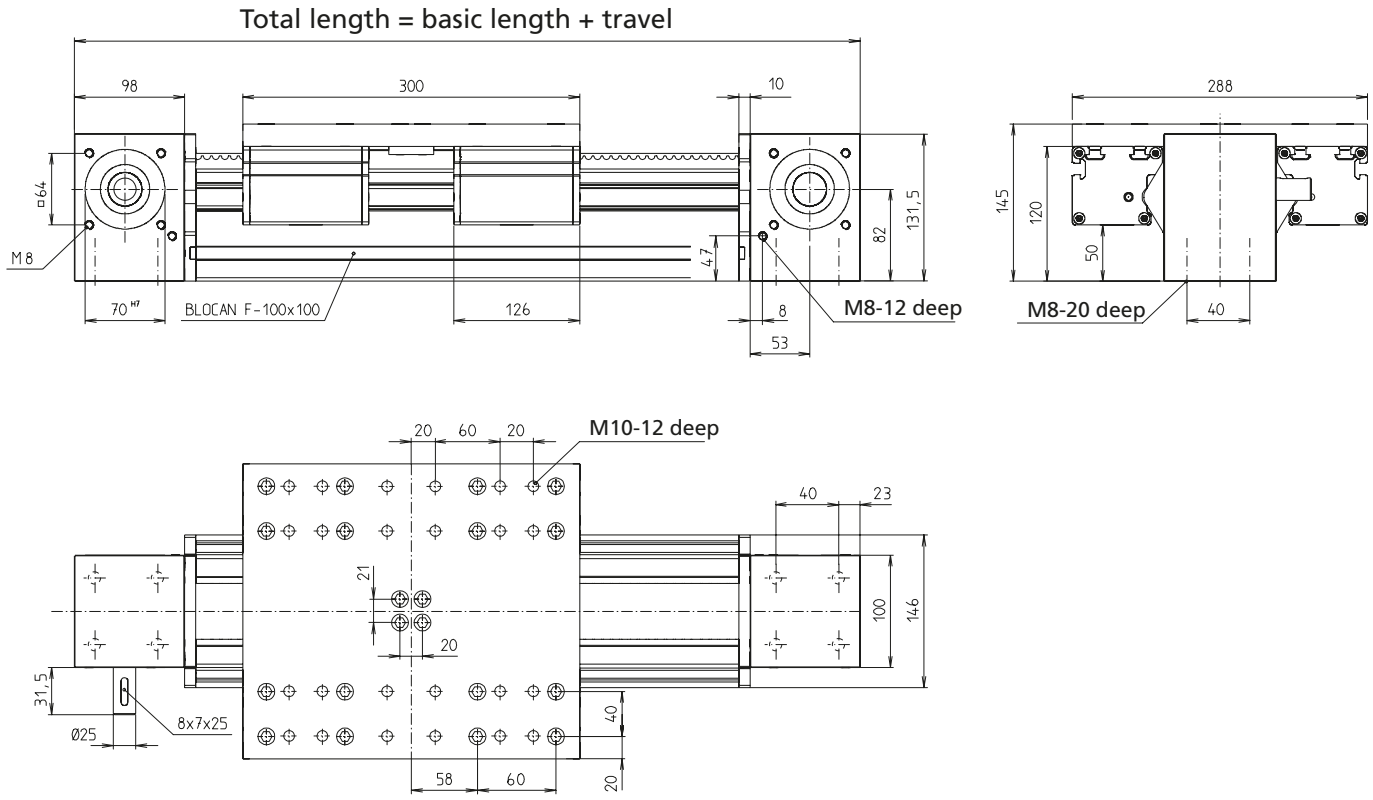
Total length = basic length + travel
98
300
10
288
ø64
M8
70 H7
BLOCAN F-100x100
126
8
53
47
82
131,5
M8-12 deep
145
120
50
M8-20 deep
40
20
60
20
M10-12 deep
40
23
21
20
100
146
31,5
Ø25
8x7x25
40
58
60
20

# LMZ – Fixing/Drive

**Order instruction:**

- **Purchase only in lot sizes and a multiple of that, see product table below**

- Slot stones can be inserted and positioned at the guide profile

**Material:** galvanised steel

## Slot stones

**Slot stone -N-**



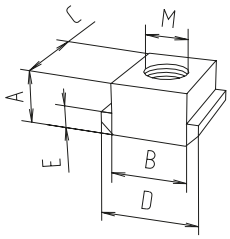


**Slot stone -N-**
can be slid into the slot

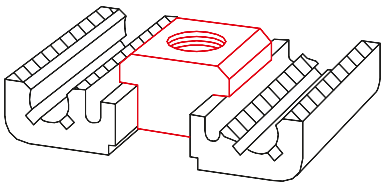

**Slot stone -K-**



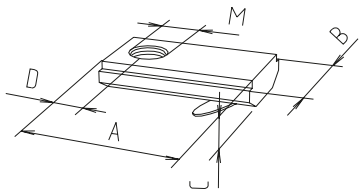


**Slot stone -K-**
can be swivelled into the slot

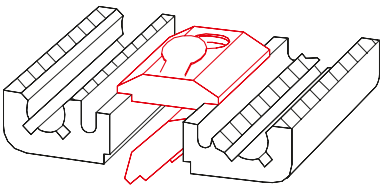

[mm] 


| Code No. | Version | lot sizes | A | B | C | D | E | M | F [N] |
|---|---|---|---|---|---|---|---|---|---|
| **Slot stone -N-** | | | | | | | | | |
| 4026207 | M5 | 10, 20, 30... pcs | 8 | 10 | 13 | 15 | 4 | M5 | 4000 |
| 4026203 | M6 | 10, 20, 30... pcs | 8 | 10 | 13 | 15 | 4 | M6 | 9000 |
| 4026206 | M8 | 10, 20, 30... pcs | 8 | 10 | 13 | 15 | 4 | M8 | 9000 |
| **Slot stone -K-** | | | | | | | | | |
| 4006211 | M5 | 10, 20, 30... pcs | 21 | 12 | 4 | 7 | M5 | 5000 | 5000 |
| 4006212 | M6 | 10, 20, 30... pcs | 21 | 12 | 4 | 7 | M6 | 5000 | 5000 |
| 4006213 | M8 | 10, 20, 30... pcs | 21 | 12 | 4 | 7 | M8 | 5000 | 5000 |
| 4016212 | M6 | 10, 20, 30... pcs | 21 | 14 | 4 | 7 | M6 | 5000 | 5000 |
| 4016213 | M8 | 10, 20, 30... pcs | 21 | 14 | 4 | 7 | M8 | 8000 | 8000 |

## Transmission unit 60-80

- Transmission of high torques up to 120 Nm on parallel linear units
- Synchronisation of carriages via zero point alignment

### Synchronous version

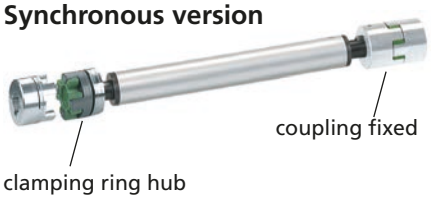


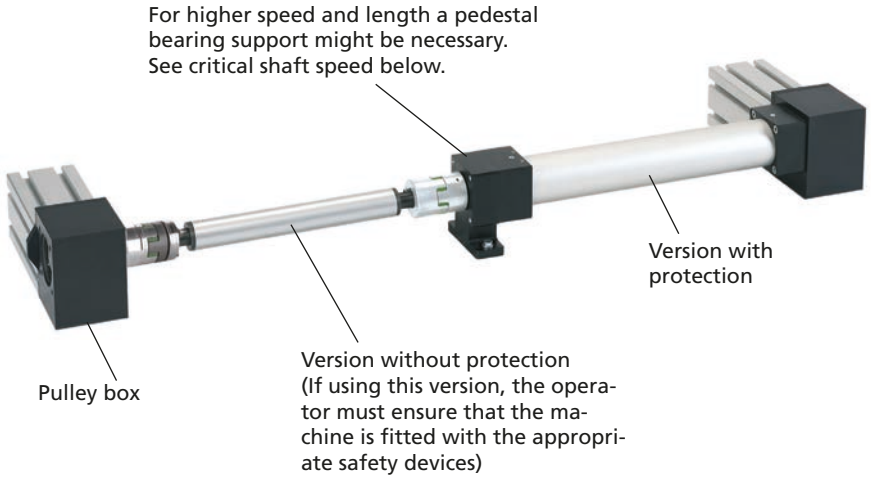


### Critical shaft speed:

max. unsupported length [mm] = (2720 - speed [rpm]) + 2 x 107.5

max. speed [rpm] = 2720 - L [mm]

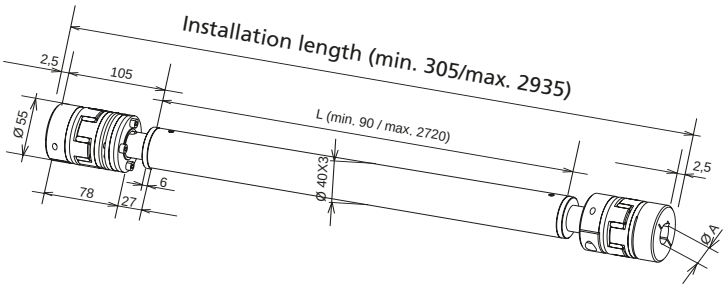


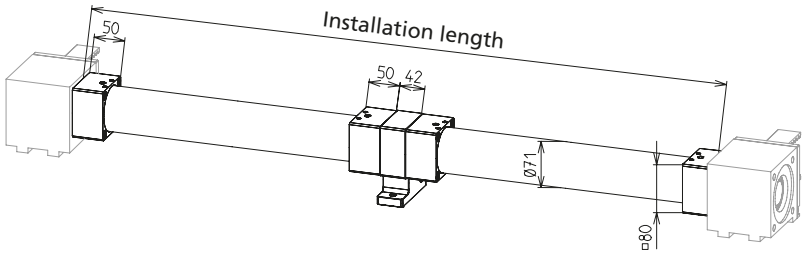


[mm]

| Code No. | Version | for linear unit | A [mm] | Weight [kg] | | |
|---|---|---|---|---|---|---|
| | | | | 1000 mm | /100 mm | Pedestal bearing support |
| 9252011 _ _ _ _ _ | Without protection | LMZ | 25 | 5.23 | 0.23 | 1.7 |
| 9252111 _ _ _ _ _ | With protection | LMZ | 25 | 8.56 | 0.4 | 1.7 |

Installation length [mm]

2 = without pedestal bearing support
3 = with pedestal bearing support

## Selection table motor adaptor/coupling

| Type | Servo motors without gear | | Servo motors with gear | | | Three-phase motor | |
|---|---|---|---|---|---|---|---|
| | RK-AC 240 | RK-AC 470 | RK-AC 112 | RK-AC 260<br>RK-AC 280 | RK-AC 345 | 90/120W | 180/250 W |
| LMZ | 949037 | 949038 | 949449 | 949450 | 949451 | 949039 | 949114 |
| | 912855<br>1425 | 912855<br>1925 | 912855 1425 | 912855 2025 | 912855 2525 | 912855<br>1225 | 912855<br>1425 |

**Note:** For further details on motor versions, please refer to the chapter "Motors and controls"

## Motor adaptor

- Simple assembly
- Exact fit due to centering shoulders

**Material:**
Aluminium, black anodised

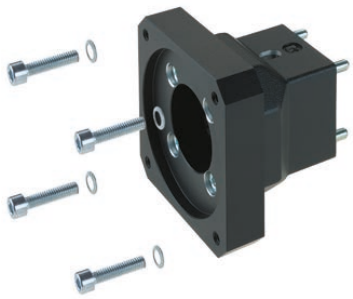

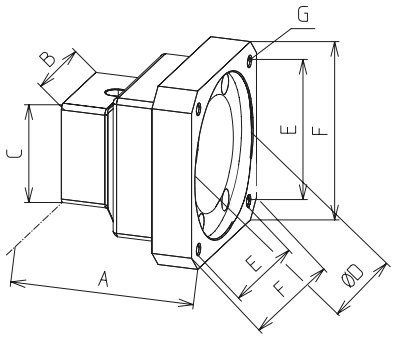


[mm]

| Code No. | A | B | C | D | E | F | G |
|---|---|---|---|---|---|---|---|
| 949449 | 102 | 80 | 80 | 40 | 53 | 70 | Ø5,5 |
| 949037 | 86 | 80 | 80 | 80 | 70,7 | 90 | M6 |
| 949450 | 96 | 80 | 80 | 60 | 70,7 | 90 | Ø6,6 |
| 949451 | 111 | 80 | 80 | 80 | 91,9 | 115 | Ø9 |
| 949038 | 96 | 80 | 80 | 95 | 81,3 | 115 | M8 |
| 949039 | 86 | 80 | 80 | 50 | 65 | 80 | M5 |
| 949114 | 86 | 80 | 80 | 80 | 100 | Ø120 | Ø6,6 |

## Coupling

- Shaft connection without back-lash
- Easy plug-in assembly

**Material:** Aluminium hub, polyurethane gear ring



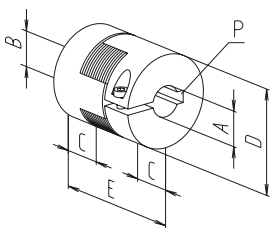


[mm]

| Code No. | ØA | ØB | C | D | E | P | Torque [Nm] | |
|---|---|---|---|---|---|---|---|---|
| | | | | | | | with feather key | without feather key |
| 9128559525 | 9,5 | 25 | 30 | 55 | 78 | – / 8x7 | 60 | 35 |
| 9128551225 | 12 | 25 | 30 | 55 | 78 | 4x4 / 8x7 | 60 | 35 |
| 9128551425 | 14 | 25 | 30 | 55 | 78 | 5x5 / 8x7 | 60 | 35 |
| 9128551925 | 19 | 25 | 30 | 55 | 78 | 6x6 / 8x7 | 60 | 35 |

## Bracket for mechanical limit switch

- Limit switch with angle lever
- Compact design

**Material:** limit switch housing made of thermoplastic, self-extinguishing, bracket made of aluminium profile



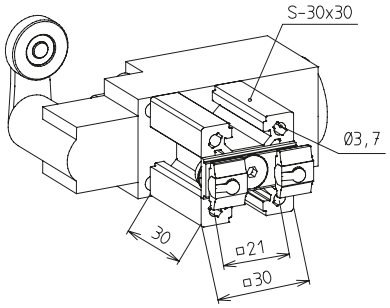


| | |
|---|---|
| Max. voltage | 230 V AC |
| Max. switching current | 4 A |
| Max. starting current | 10 A |
| Operating cycles | Max. 5,000/h |
| Mechanical lifetime | 20 x $10^6$ switching cycles |
| Axis lever adjustment | locking by 360° |
| Protection class | IP 67 |
| Ambient temperature | -30°C to +80°C |

| Code No. | Type |
|---|---|
| 92710 | Limit switch NC/NO with bracket |

## Bracket for inductive limit switch

- Fixing in the profile slot of the guide profile
- Function indicator
- Maintenance-free

**Material:** Limit switch housing made of stainless steel, bracket made of aluminium



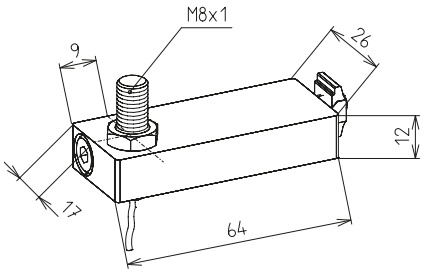


| Type | 100 |
|---|---|
| Voltage | 10 - 30 V DC |
| Max. switching current | 150 mA |
| Operating distance | 2 mm for steel |
| Protection class | IP 67 |
| Ambient temperature | -25°C to +70°C |
| Cable lengths | 2m |

| Code No. | Type |
|---|---|
| 92960 | Limit switch changeover, with bracket |

# Ball rail actuator/guide - MultiLine / R

## Compact ball rail actuator for high loads

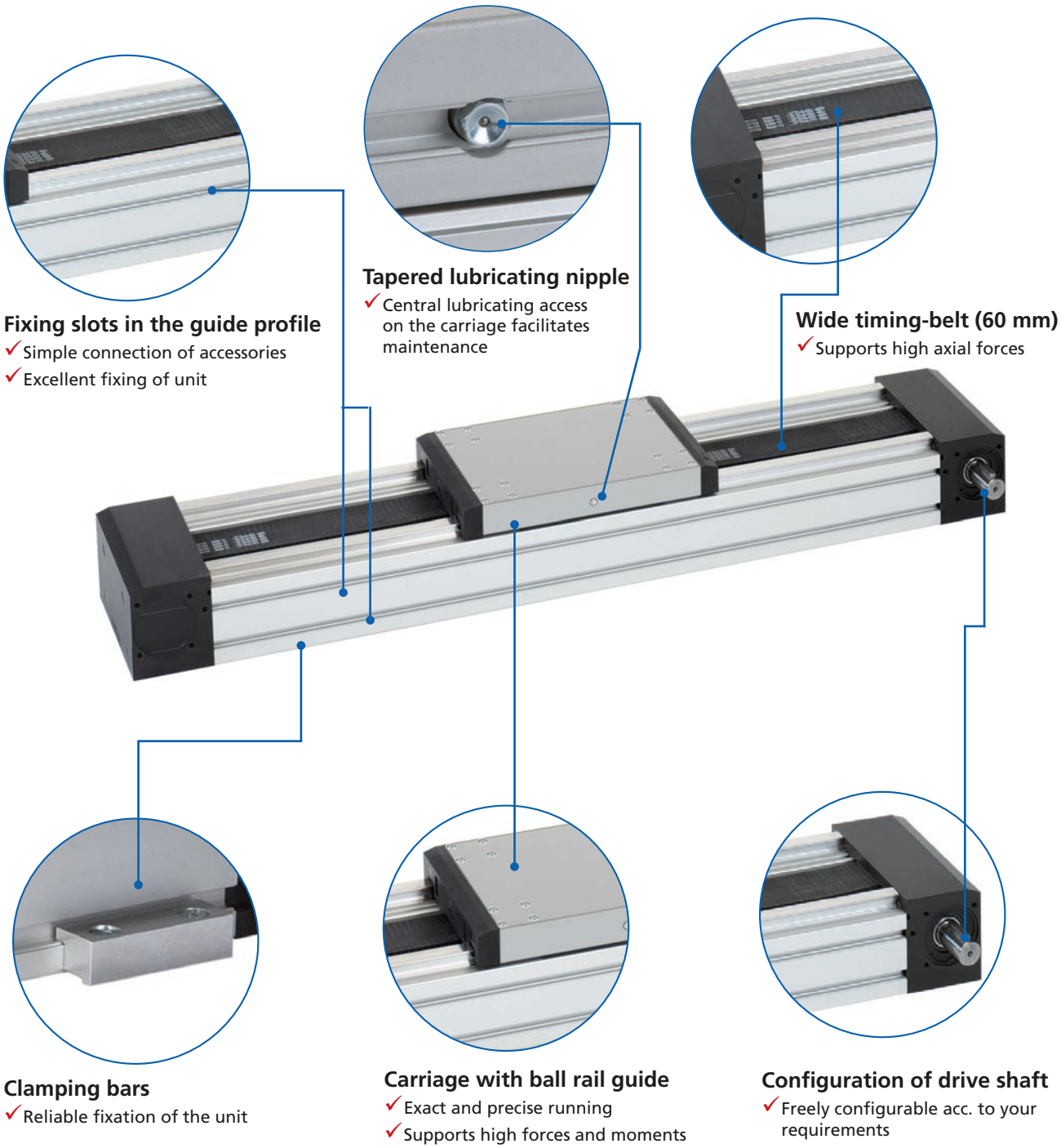

**Fixing slots in the guide profile**
- ✓ Simple connection of accessories
- ✓ Excellent fixing of unit

**Tapered lubricating nipple**
- ✓ Central lubricating access on the carriage facilitates maintenance

**Wide timing-belt (60 mm)**
- ✓ Supports high axial forces

**Clamping bars**
- ✓ Reliable fixation of the unit

**Carriage with ball rail guide**
- ✓ Exact and precise running
- ✓ Supports high forces and moments

**Configuration of drive shaft**
- ✓ Freely configurable acc. to your requirements

### Features:

- Guide profile 100 x 200 compatible with BLOCAN® profile system
- Durable ball rail guide
- Flat and compact design

### Options:

- Longer stroke lengths
- Second non driven carriage
- Extended carriage

# MultiLine / R - Table of contents


## Properties/Technical data

- General information/operating conditions ... 380
- Load data ... 380

## Versions
(Dimensions, order numbers)

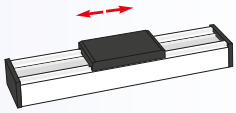

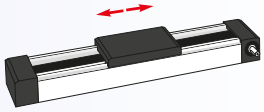

- MultiLine R guide unit ... 382 - 383
- MultiLine timing-belt unit ... 384 - 385

## Accessories

**Fixing**
- Slot stones ... 386

**Drive**
- Transmission unit ... 387
- Motor adaptor/couplings ... 388

**Position determination**
- Limit switches ... 389

# MultiLine – Technical data

## General information/operating conditions

| | MultiLine |
|---|---|
| Design | Aluminium profile, timing-belt drive |
| Guidance system | 2 parallel ball rails, external |
| Installation position | Any position |
| Max. input torque [Nm] | 161 |
| Max. speed [m/s] | 5 |
| Max. acceleration [m/s$^2$] | 50 |
| Repeatability | ± 0,05 mm |
| No-load torque [Nm] | 2,00 |
| Drive | GT-Toothed belt, Pitch 8 mm, Width 60 mm |
| Eff. diam. of pulley [mm] | 68,75, |
| Pulley wheel circumference | 216 |
| Ambient temperature | 0°C to +60°C |
| Protection class | IP 20 |

## Dynamic load data

F Force [N]

M Moment [Nm]

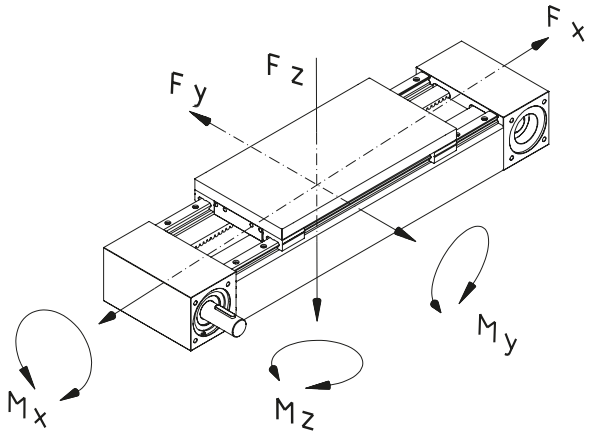


| Type | Fx* | Fy | Fz | Mx | My | Mz |
|---|---|---|---|---|---|---|
| MultiLine (Ball rail system) | | | | | | |
| MultiLine R | – | 8200 | 12000 | 920 | 1600 | 1500 |
| MultiLine with external timing-belt | | | | | | |
| MultiLine | 4700 | 8200 | 12000 | 920 | 1600 | 1500 |

* Initial tension of the timing belt 0,8 x Fx

## Geometric moment of inertia

[cm$^4$]

| Type | Iy | Iz |
|---|---|---|
| MultiLine | 630,85 | 2643,85 |

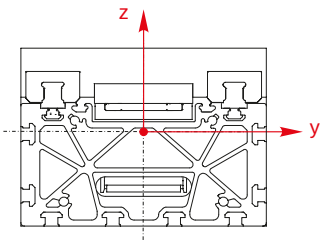

## Calculation of the load characteristic to define the lifetime

- The lifetime of linear units are in accordance with the average loads and moments of an application. The load characteristic can approximately calculated by following equation with simultaneously appearing load and moments.

$$\text{Load characteristic} = \frac{\text{Application values (z.B. Fy)}}{\text{Catalog values (z.B. Fy}_{max}\text{)}}$$

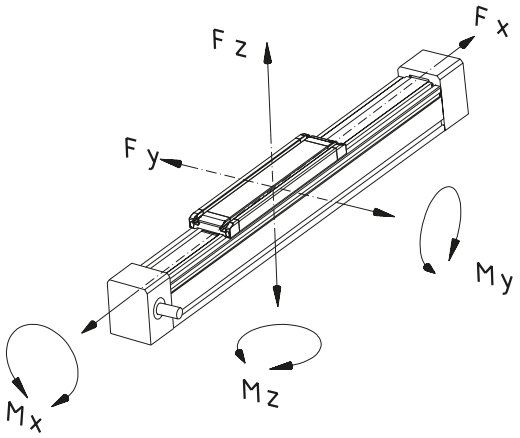


$$\text{Load characteristic } B_K = \frac{Fy}{Fy_{max}} + \frac{Fz}{Fz_{max}} + \frac{Mx}{Mx_{max}} + \frac{My}{My_{max}} + \frac{Mz}{Mz_{max}} \leq 1$$

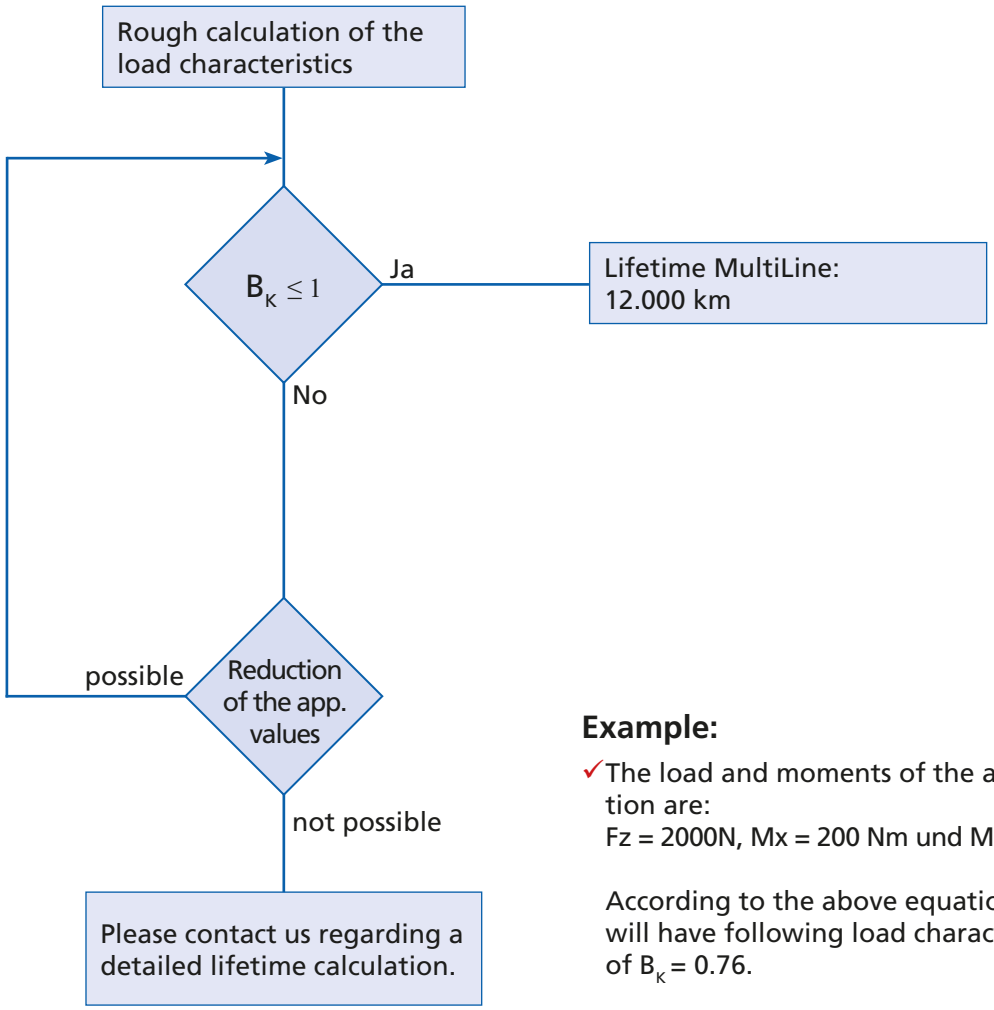


**Example:**

✓ The load and moments of the application are:
Fz = 2000N, Mx = 200 Nm und Mz = 450 Nm

According to the above equation you will have following load characteristic of $B_K = 0.76$.

**Order information:**

- Longer travel lengths on request
- Second or extended carriage available on request

**Version** ■ **Guide**



[mm]

| Code No. | Type | Basic length | Max. travel | Mass [kg] | |
|---|---|---|---|---|---|
| | | | | Basic length | per 100 mm travel |
| MSA2010IA | Ball rail system | 420 | 5620 | 31.11 | 2.00 |

_ _ _ _ Total length = basic length + travel [mm]

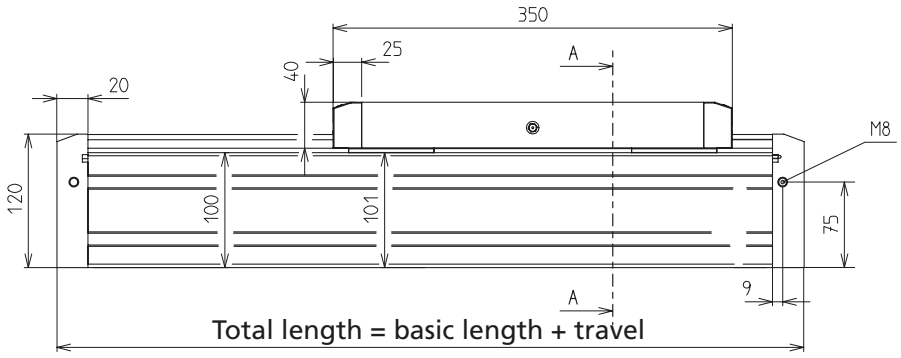
350
25
A
40
20
M8
120
100
101
75
9
A
Total length = basic length + travel

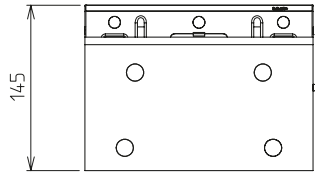
145

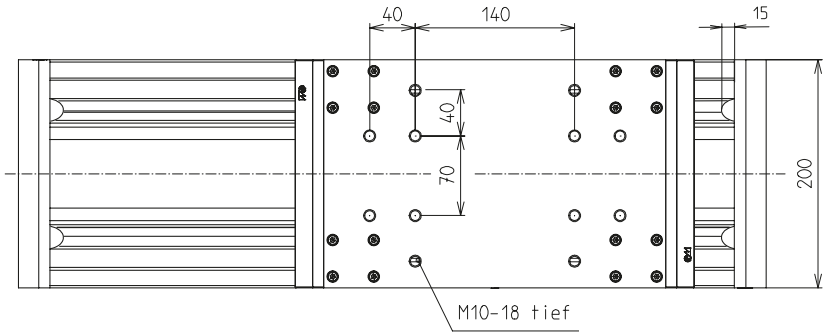
40
140
15
40
70
200
M10-18 tief

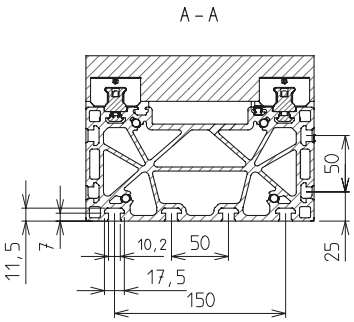
A - A
50
11,5
7
10,2
50
25
17,5
150

# MultiLine - Versions

**Order information:**

- Longer travel lengths on request
- Second non driven or extended carriage available on request

**Version** ■ **Timing-belt unit**

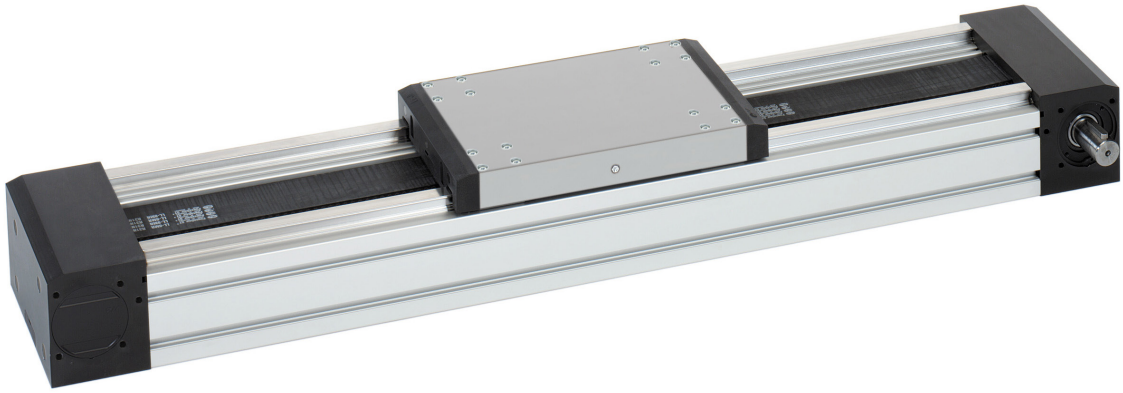

[mm]

| Code No. | Type | Toothed belt | Basic length | Max. travel | Mass [kg] | |
|---|---|---|---|---|---|---|
| | | | | | Basic length | per 100 mm travel |
| TAA2010 _ I | Ball rail system | 8 M60 | 550 | 5620 | 29.90 | 2.05 |

_ _ _ _ Total length = basic length + travel [mm]

Configuration of drive shaft

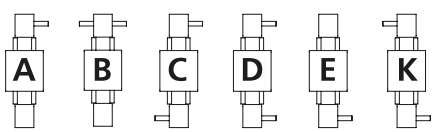

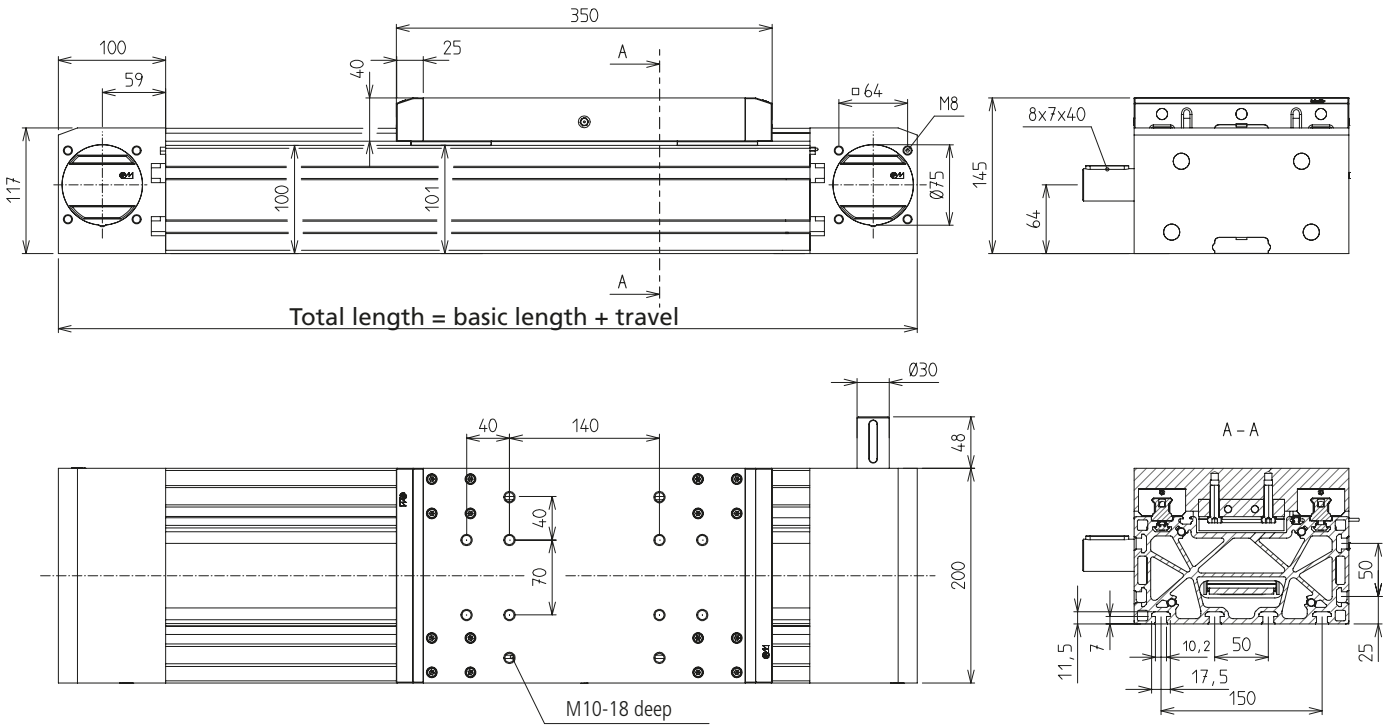
350
100
59
25
40
A
□64
M8
117
100
101
Ø75
145
8x7x40
64
A
Total length = basic length + travel
Ø30
40
140
48
40
70
200
M10-18 deep
A – A
50
11,5
7
10,2
50
17,5
25
150

**Order instruction:**

- **Purchase only in lot sizes and a multiple of that, see product table below**

- Slot stones can be inserted and positioned at the guide profile and carriage

**Material:** galvanised steel

## Slot stones

Slot stone -N-



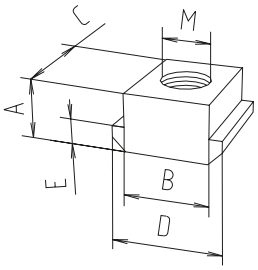


**Slot stone -N-**
can be slid into the slot

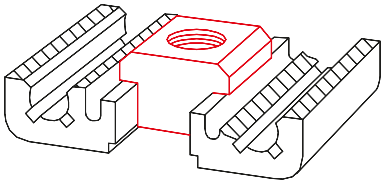

Slot stone -K-



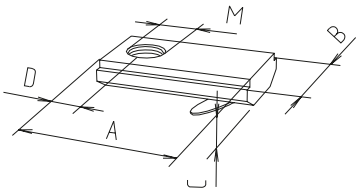


**Slot stone -K-**
can be swivelled into the slot

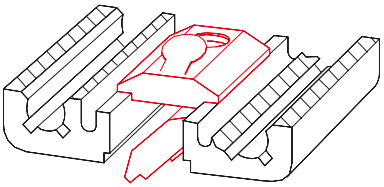

[mm] 


| Code No. | Version | lot sizes | A | B | C | D | E | M | F [N] |
|---|---|---|---|---|---|---|---|---|---|
| **Slot stone -N-** | | | | | | | | | |
| 4026207 | M5 | 10, 20, 30... pcs | 8 | 10 | 13 | 15 | 4 | M5 | 4000 |
| 4026203 | M6 | 10, 20, 30... pcs | 8 | 10 | 13 | 15 | 4 | M6 | 9000 |
| 4026206 | M8 | 10, 20, 30... pcs | 8 | 10 | 13 | 15 | 4 | M8 | 9000 |
| **Slot stone -K-** | | | | | | | | | |
| 4016212 | M6 | 10, 20, 30... pcs | 21 | 14 | 4 | 7 | – | M6 | 5000 |
| 4016213 | M8 | 10, 20, 30... pcs | 21 | 14 | 4 | 7 | – | M8 | 8000 |

## Transmission unit

- Transmission of high torques up to 120 Nm on parallel linear units
- Synchronisation of carriages via zero point alignment

### Synchronous version

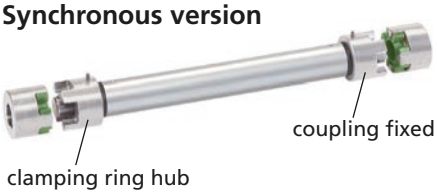


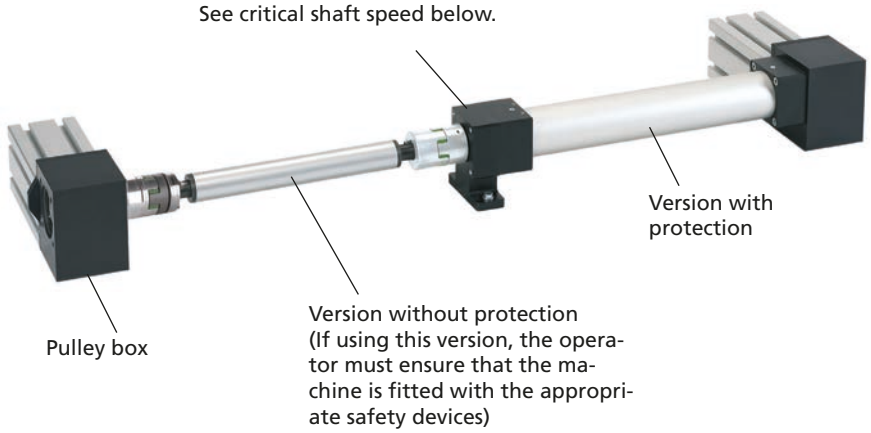


### Critical shaft speed:

max. unsupported length [mm] = (2720 - speed [rpm]) + 2 x 107.5

max. speed [rpm] = 2720 - L [mm]

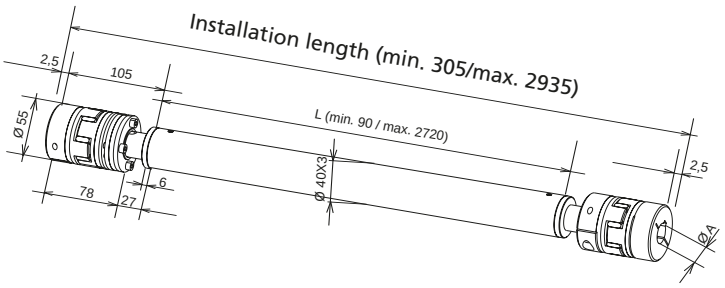


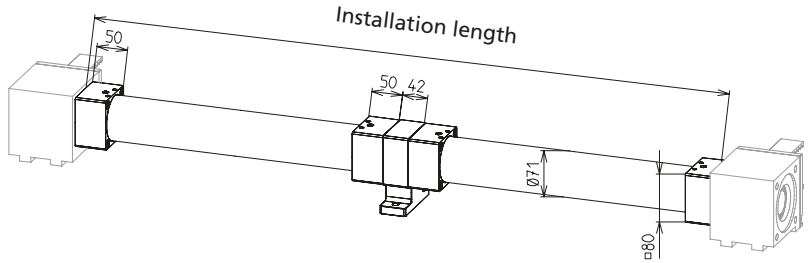


[mm]

| Code No. | Version | for linear unit | A [mm] | Weight [kg] | | |
|---|---|---|---|---|---|---|
| | | | | 1000 mm | /100 mm | Pedestal bearing support |
| 9252052 _ _ _ _ _ | Without protection | MultiLine | 30 | 5.23 | 0.23 | 1.7 |
| 9252152 _ _ _ _ _ | With protection | MultiLine | 30 | 8.56 | 0.4 | 1.7 |

Installation length [mm]

**Standard:**
0 = without pedestal bearing support
1 = with pedestal bearing support

2 = without pedestal bearing support
3 = with pedestal bearing support

## Selection table Motor adaptor/coupling

| Type | Servo motors without gear | | Servo motors with gear | | | Three-phase motor | |
|---|---|---|---|---|---|---|---|
| | RK-AC 240 | RK-AC 470 | RK-AC 112 | RK-AC 260<br>RK-AC 280 | RK-AC 345 | 90/120 W | 180/250 W |
| MultiLine | 949962 | 949964 | 949446 | 949447 | 949448 | 949968 | 949969 |
| | 912855<br>1430 | 912855<br>1930 | 912855<br>1430 | 912855<br>2030 | 912855<br>2530 | 912855<br>1230 | 912855<br>1430 |

**Note:** For further details on motor versions, please refer to the chapter "Motors and controls"

## Motor adaptor

- Simple assembly
- Exact fit due to centering shoulders

**Material:** Aluminium, black anodised

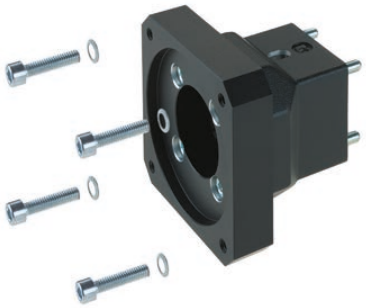

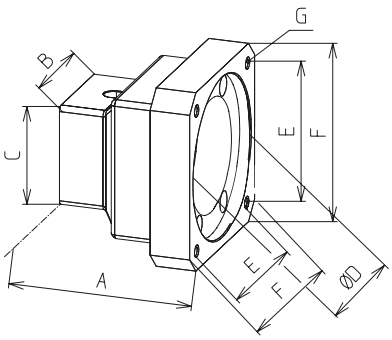


[mm]

| Code No. | A | B | C | D | E | F | G |
|---|---|---|---|---|---|---|---|
| 949446 | 112 | 80 | 80 | 40 | 53 | 70 | Ø5,5 |
| 949962 | 99 | 80 | 80 | 80 | 70,7 | 90 | M6 |
| 949447 | 106 | 80 | 80 | 60 | 70,7 | 90 | Ø6,6 |
| 949448 | 120 | 80 | 80 | 80 | 91,9 | 115 | Ø9 |
| 949964 | 106 | 80 | 80 | 95 | 81,3 | 115 | M8 |
| 949968 | 99 | 80 | 80 | 50 | 46 | 80 | M5 |
| 949969 | 99 | 80 | 80 | 80 | 100 | Ø120 | Ø6,6 |

## Coupling

- Shaft connection without backlash
- Easy plug-in assembly

**Material:** Aluminium hub, polyurethane gear ring



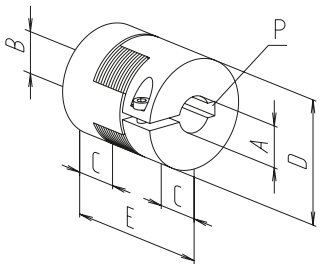


[mm]

| Code No. | ØA | ØB | C | D | E | P | Torque [Nm] | |
|---|---|---|---|---|---|---|---|---|
| | | | | | | | with feather key | without feather key |
| 9128551430 | 14 | 30 | 30 | 55 | 78 | 5x5 / 8x7 | 60 | 35 |
| 9128551930 | 19 | 30 | 30 | 55 | 78 | 6x6 / 8x7 | 60 | 35 |

## Bracket for mechanical limit switch

- Limit switch with angle lever
- Compact design

**Material:** Limit switch housing made of thermoplastic, self-extinguishing, bracket made of aluminium profile

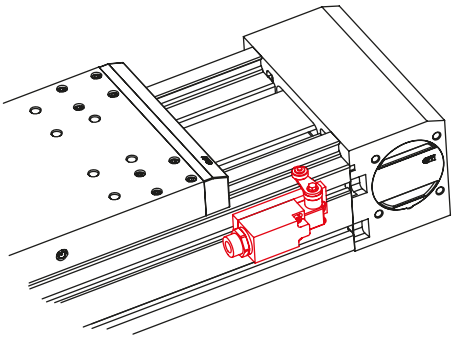

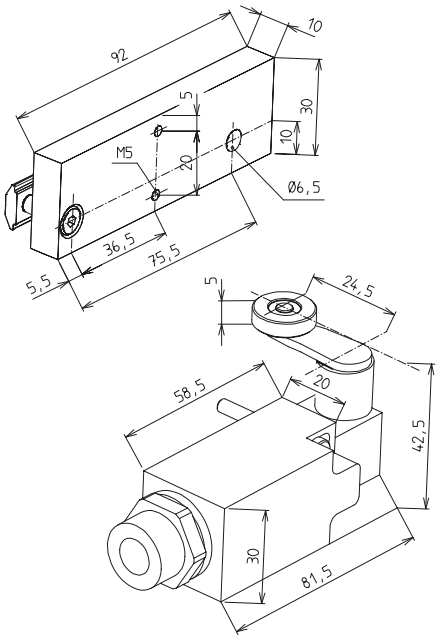


[mm]

| | |
|---|---|
| Max. voltage | 230 V AC |
| Max. switching current | 4 A |
| Max. starting current | 10 A |
| Operating cycles | Max. 5,000/h |
| Mechanical lifetime | 20 x $10^6$ switching cycles |
| Axis lever adjustment | locking by 360° |
| Protection class | IP 67 |
| Ambient temperature | -30°C to +80°C |

| Code No. | Type |
|---|---|
| 92711 | Limit switch NC/NO with bracket |

## Bracket for inductive limit switch

- Fixing in the profile slot of the guide profile
- Function indicator
- Maintenance-free

**Material:** Limit switch housing made of stainless steel, bracket made of aluminium

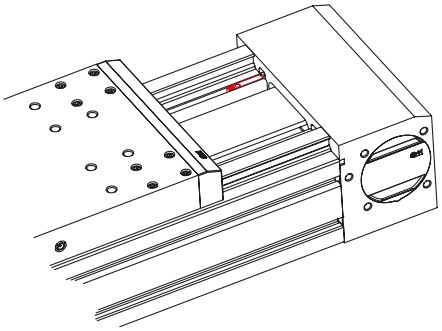

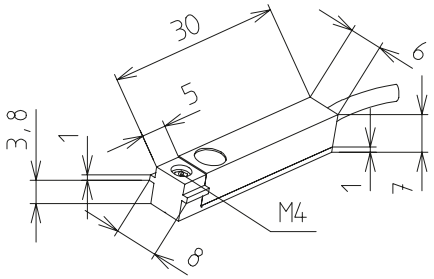


| | |
|---|---|
| Voltage | 10-30 V DC |
| Max. switching current | 10 mA |
| Max. starting current | 100 mA |
| Operating frequency | Max. 5 kHz |
| Mechanical lifetime | independent of operating cycles |
| Operating distance | 1.5 mm |
| Protection class | IP 67 |
| Ambient temperature | -25°C to +70°C |

| Code No. | Type |
|---|---|
| 92929 | Limit switch NC, with bracket |

# RK DuoLine Z / R – Key features / technical benefits

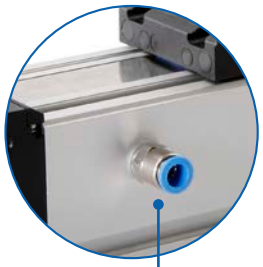

**Connection**
- ✓ For sealing air or vacuum available on request

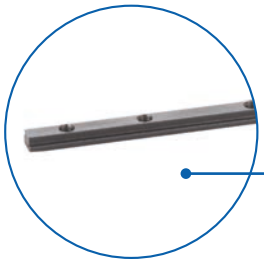

**Slot stone strip**
- ✓ To hold your load securely

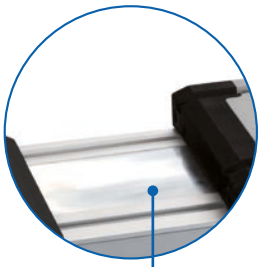

**Cover strip**
- ✓ Degree of protection mode IP40

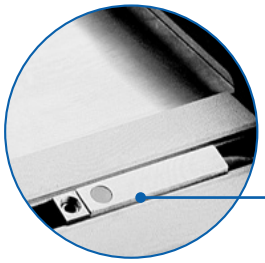

**Proximity switch**
- ✓ Simple installation without protruding contours
- ✓ Up to 3 sensors per slot
- ✓ Can be installed and changed subsequently

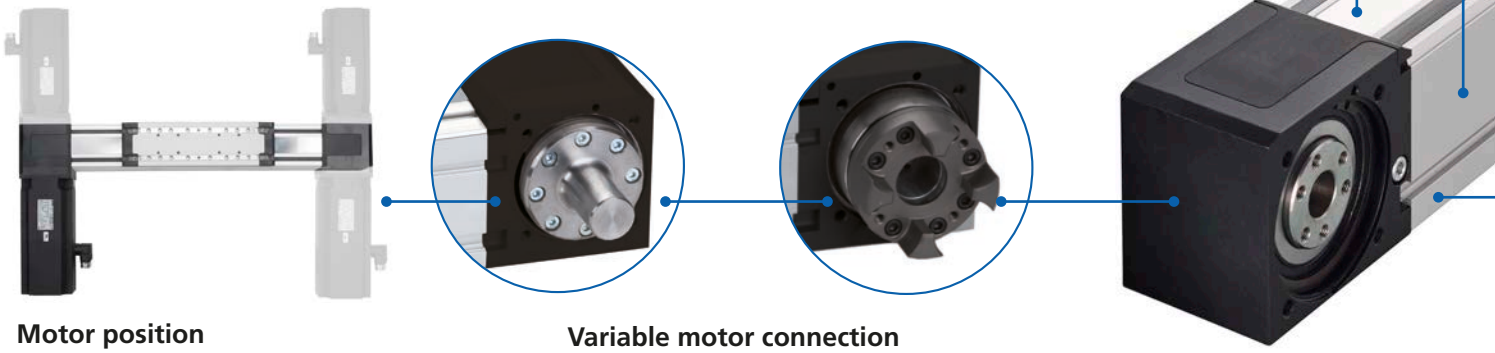

**Motor position**
- ✓ Can be modified at a later stage
- ✓ Freely selectable motor position
- ✓ Motor can be rotated in 90° carriage

**Variable motor connection**
- ✓ For metal bellows coupling
- ✓ For elastomer coupling

## Key features general

- High efficiency
- Low idle torque
- Max. usable travel speed regardless of length
- Central lubricating access on the carriage facilitates maintenance
- Profile slots for fastening the axis both at the sides and underneath
- Slot stones can be subsequently inserted in the side and bottom slots

### RK DuoLine Z (toothed-belt drive)

- Degree of protection IP20
- Flexible positioning of motor thanks to pulley boxes with hollow shafts
- Repeat accuracy ±0.05 mm

### RK DuoLine Z Protect (toothed-belt drive)

- Degree of protection IP40 provided by steel cover strip and seals
- Flexible positioning of motor thanks to pulley boxes with hollow shafts
- Repeat accuracy ±0.05 mm

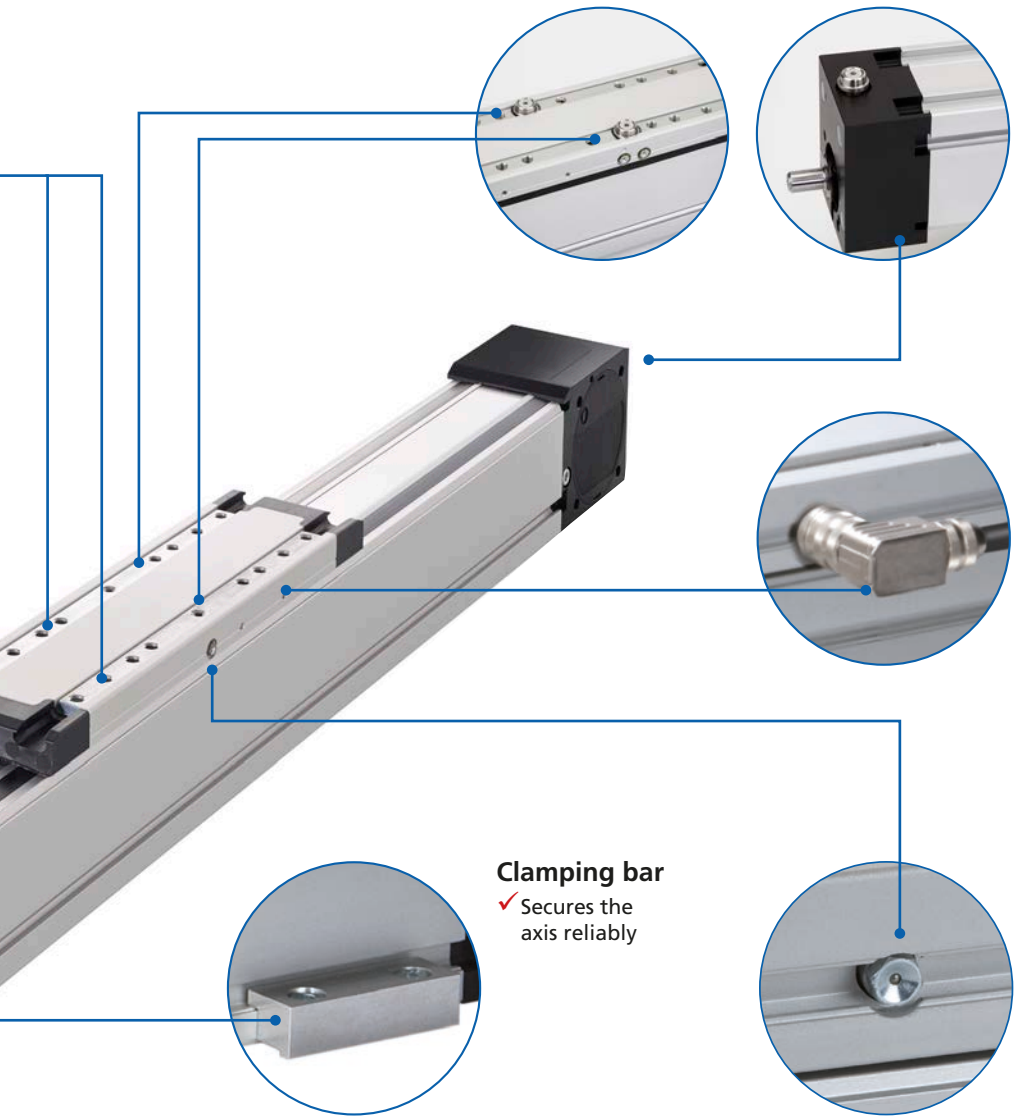

### Centring holes
- ✓ Reproducible payload position/linear unit

### Integr. position sensing system
- ✓ High positioning accuracy across the entire unit lengthe
- ✓ Direct detection of carriage position
- ✓ Elasticities of the drive train identifiable and can be offset by the motor controller

### Clamping bar
- ✓ Secures the axis reliably

### Tapered lubricating nipple
- ✓ Central lubricating access on the carriage facilitates maintenance
- ✓ RK DuoLine S with trapezoidal thread is lifetime lubricated*
- ✓ Alternative connection to permanent lubrication available on request

**RK DuoLine R Protect (guide axis)**
- Without dedicated drive
- Freely movable carriage

## Variants

RK DuoLine Clean suitable for use in cleanrooms up to ISO class 1

Fraunhofer IPA TESTED DEVICE
RK Rose+Krieger GmbH
RK DuoLine S60 Clean
Report No. RK 1404-704

**Note:**
More information in chapter RK DuoLine Clean (p. 410)

* up to approximately 30 km running performance

# RK DuoLine Safelock

## Timing-belt- and Spindle units with secure locking function

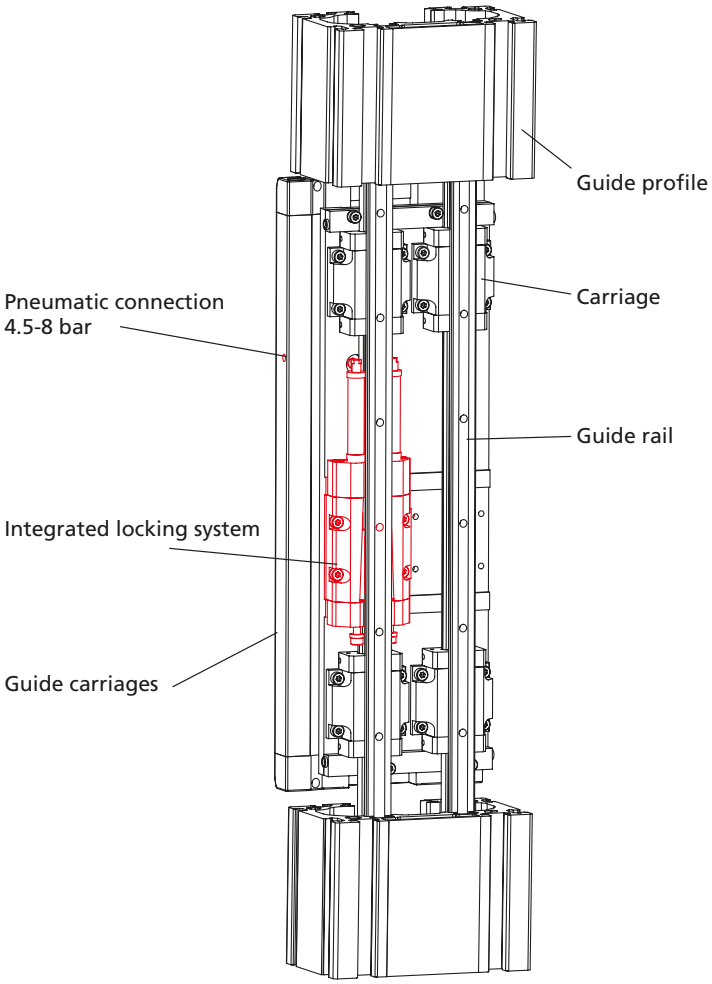




- ✓ As a safeguard for installation, removal and maintenance work
- ✓ Guaranteed nominal holding force on greased ball rails thanks to self-amplifying system
- ✓ „Safelock" safety locking device is an approved component in accordance with category 1 of DIN EN ISO 13849-1, which should be considered
- ✓ $B_{10}$ = 1.000.000 operations (static)
- ✓ Performance level PL D achievable. PL E as redundant version available on request
- ✓ Integrated locking system. No protruding contours outside the linear axis.
- ✓ Overload-proof locking element

| | Recirculating ball | Toothed belt | |
|---|---|---|---|
| | RK Duoline S 160 | RK Duoline Z 120 one ball rail | RK Duoline Z 160 |
| Nominal holding force Safelock (at $B_{10}$ = 1.000.000 operations) | 1800 N | 2500 N | 1800 N |
| DGUV test certification | Tested based on testing principles GS-MF-01 and GS-MF-28 | DGUV Test MF 15007 Sicherheit geprüft tested safety | Tested based on testing principles GS-MF-01 and GS-MF-28 |

**Note:**
Maximum holding force = 2x nominal holding force.
Emergency braking of a moving load is not proper use.
If the nominal holding force is exceeded, or after every emergency braking, a functional check has to be performed in normal mode as per the operating instructions.
www.rk-rose-krieger.com/fileadmin/catalogue/manuals_lineartechnik/99399_safelock15_ph.pdf

# RK DuoLine Z 80/120/160 - Table of contents


## Properties/Technical data

- General information/operating conditions ... 394
- Load data ... 394
- Calculation of the load characteristic ... 395

## Versions
(Dimensions, order numbers)

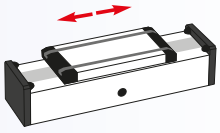

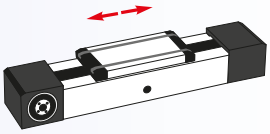

- RK DuoLine R guide unit ... 396
- RK DuoLine Z timing-belt uni ... 398 - 399
- RK DuoLine Z Safelock ... 400

## Accessories

**Fixing**
- Fixing the rated load ... 402
- Fixing the linear unit ... 403
- Slot stones ... 403
- Centering Sets ... 404

**Drive**
- Drive shaft ... 406
- Motor adaptor kit ... 406
- Synchronisation shaft ... 407

**Position determination**
- Limit switch ... 408 - 409

# RK DuoLine Z 60/80/120/160 – Technical data

## General information / operating conditions

| | RK DuoLine Z 60 | RK DuoLine Z 80 | RK DuoLine Z 120 | RK DuoLine Z 120 II | RK DuoLine Z 160 |
|---|---|---|---|---|---|
| Guidance system | 1 Ball rail system | 1 Ball rail system | 1 Ball rail system | 2 Ball rail system | 2 Ball rail system |
| Installation position | any position | | | | |
| Max. driving torque | 28 Nm | 67 Nm | 141 Nm | 141 Nm | 220 Nm |
| Max. speed | 5 m/s | 5 m/s | 5 m/s (10m/s) | 5 m/s | 5 m/s |
| Max. acceleration | 50 m/s² | 50 m/s² | 50 m/s² | 50 m/s² | 50 m/s² |
| Repeat accuracy | ± 0,05 mm | ± 0,05 mm | ± 0,05 mm | ± 0,05 mm | ± 0,05 mm |
| Positioning accuracy | with integrated linear encoder ± (0.025 + 0.01 x L) mm; L = travel in meters | | | | |
| Max. no-load torque | 2 Nm | 2,2 Nm | 2,3 Nm | 2,3 Nm | 2,5 Nm |
| Drive | GT Belts from neoprene, Pitch 5 mm, Width 20 mm | GT Belts from neoprene, Pitch 8 mm, Width 30 mm | GT Belts from neoprene, Pitch 8 mm, Width 50 mm | GT Belts from neoprene, Pitch 8 mm, Width 50 mm | GT Belts from neoprene, Pitch 8 mm, Width 75 mm |
| Active Ø pulley wheel | 52,52 mm | 66,21 mm | 76,39 mm | 76,39 mm | 76,39 mm |
| Pulley wheel circumference | 165 mm | 208 mm | 239,99 mm | 239,99 mm | 239,99 mm |
| Ambient temperature | 0 to +60°C | 0 to +60°C | 0 to +60°C | 0 to +60°C | 0 to +60°C |
| Degree of protection | Basic IP 20 / Protect IP 40 | Basic IP 20 / Protect IP 40 | Basic IP 20 / Protect IP 40 | Basic IP 20 / Protect IP 40 | Basic IP 20 / Protect IP 40 |

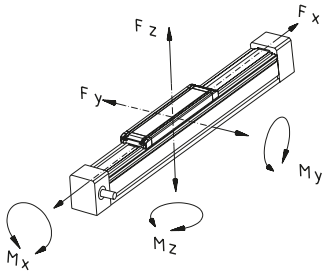


## Dynamic load data

Force [N]

Torque [Nm]

| Toothed-belt drive | | | | | | |
|---|---|---|---|---|---|---|
| Load data | Fx* | Fy | Fz | Mx | My | Mz |
| Standard guide carriagew | | | | | | |
| RK Duoline Z 60 | 900 | 700 | 2500 | 48 | 160 | 140 |
| RK Duoline Z 80 | 2000 | 1000 | 4100 | 100 | 340 | 300 |
| RK DuoLine Z 120<br>RK DuoLine Z 120 Safelock | 3600 | 1400 | 6400 | 125 | 550 | 530 |
| RK Duoline Z 120 II | 3600 | 2000 | 6900 | 205 | 620 | 560 |
| RK DuoLine Z 160<br>RK DuoLine Z 160 Safelock | 6000 | 5100 | 8900 | 500 | 840 | 810 |
| Extended guide carriage | | | | | | |
| RK Duoline Z 60 | 900 | 700 | 2500 | 48 | 250 | 220 |
| RK Duoline Z 80 | 2000 | 1000 | 4100 | 100 | 590 | 520 |
| RK Duoline Z 120 | 3600 | 1400 | 6400 | 125 | 890 | 680 |
| RK Duoline Z 120 II | 3600 | 2000 | 6900 | 205 | 940 | 790 |
| RK Duoline Z 160 | 6000 | 5100 | 8900 | 500 | 1200 | 1150 |

* Initial tension of the timing belt 0,8 x Fx

## Geometric moment of inertia

[$cm^4$]

| | Iy | Iz |
|---|---|---|
| RK DuoLine Z 60 | 52,54 $cm^4$ | 67,41 $cm^4$ |
| RK DuoLine Z 80 | 127,90 $cm^4$ | 172,80 $cm^4$ |
| RK DuoLine Z 120 | 289,5 $cm^4$ | 627,8 $cm^4$ |
| RK DuoLine Z 120 II | 287,3 $cm^4$ | 597,9 $cm^4$ |
| RK DuoLine 160 | 437,70 $cm^4$ | 1455,90 $cm^4$ |

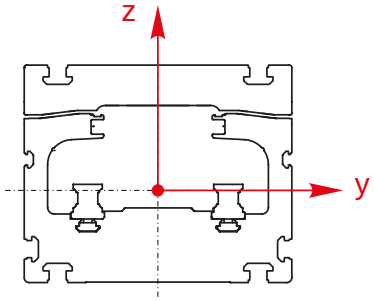

## Calculation of the load characteristic to define the lifetime

- The lifetime of linear units are in accordance with the average loads and moments of an application. The load characteristic can approximately calculated by following equation with simultaneously appearing load and moments.

$$\text{Load characteristic} = \frac{\text{Application values (z.B. Fy)}}{\text{Catalog values (z.B. Fy}_{max}\text{)}}$$

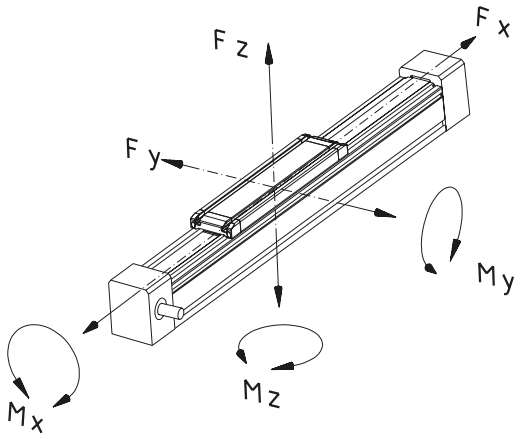


$$\text{Load characteristic } B_K = \frac{Fy}{Fy_{max}} + \frac{Fz}{Fz_{max}} + \frac{Mx}{Mx_{max}} + \frac{My}{My_{max}} + \frac{Mz}{Mz_{max}} \leq 1$$

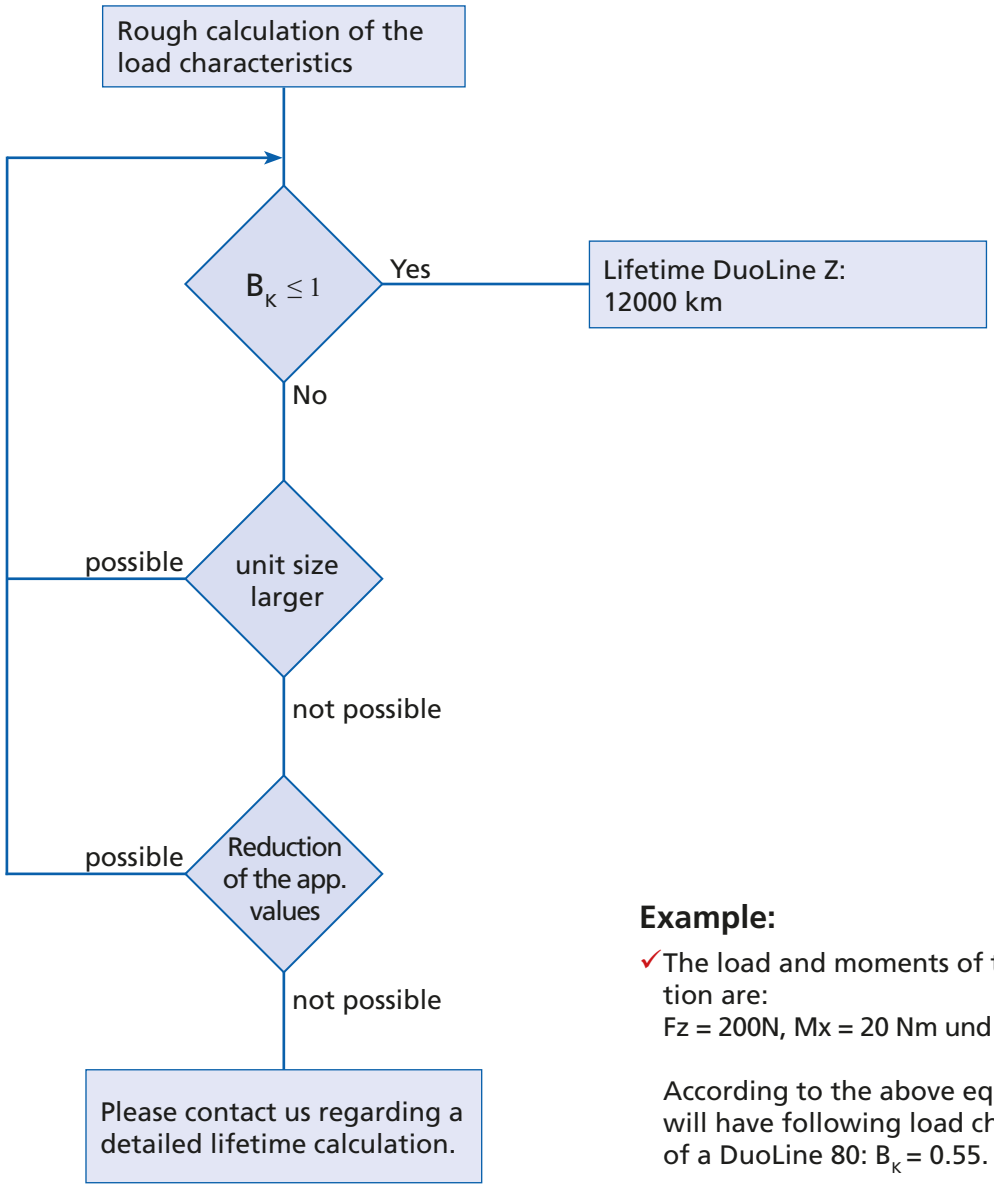


**Example:**

✓ The load and moments of the application are:
Fz = 200N, Mx = 20 Nm und Mz = 45 Nm

According to the above equation you will have following load characteristic of a DuoLine 80: $B_K = 0.55$.

# RK DuoLine R 60/80/120 – Versions

**Bestellhinweise:**

- Longer travel lengths on request
- Integrated linear encoder as Option

**Version**

## Guide

Ideal as additional / secondary support for the Duoline with toothed belt or spindle.



| Code No. | Type | Basic length | B | C |
|---|---|---|---|---|
| TD14A5T1A11A0 _ _ _ _ | RK DuoLine R 60 Protect | 295 | 60 | 80 |
| TD14A5T1B11A0 _ _ _ _ | RK DuoLine R 60 Protect with extended guide carriage | 385 | | |
| TD14A2T1A11A0 _ _ _ _ | RK DuoLine R 80 Protect | 352 | 80 | 100 |
| TD14A2T1B11A0 _ _ _ _ | RK DuoLine R 80 Protect with extended guide carriage | 484 | | |
| TD14A3T1A11A_ _ _ _ _ | RK DuoLine R 120 Protect one ball rail guide | 472 | 120 | 115 |
| TD14A3T1B11A_ _ _ _ _ | RK DuoLine R 120 Protect one ball rail guide with extended guide carriage | 616 | | |

Total lenght = basic length + total travel (mm)

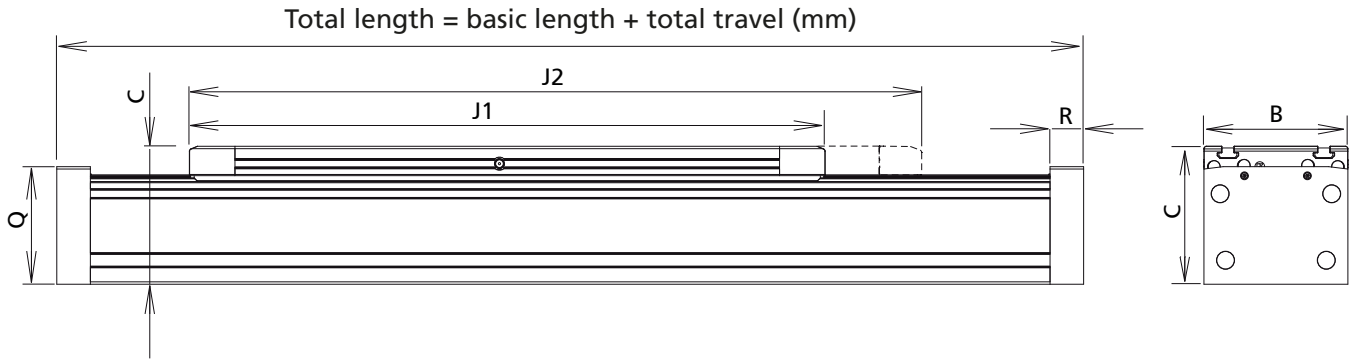


[mm]

| J1 | J2 | Q | R | max. travel | Mass [kg] | |
|---|---|---|---|---|---|---|
| | | | | | Basic length | per 100 mm travel |
| 245 | – | 70 | 22 | 3587 | 3,73 | 0,54 |
| – | 335 | | | 3497 | 4,46 | 0,54 |
| 278 | – | 97 | 22 | 7692 | 5,22 | 0,83 |
| – | 410 | | | 7560 | 6,89 | 0,83 |
| 386 | – | 98 | 28 | 7584 | 9,76 | 1,19 |
| – | 530 | | | 7440 | 12,16 | 1,19 |

# RK DuoLine Z 60/80/120/160 – Versions

**Order information:**

- Longer travel lengths on request
- Also available without screw drive as a torque support

## Timing-belt unit RK DuoLine Z Place-Tec



| Code No. | Type | Basic length | B | C | D1 | D2 |
|---|---|---|---|---|---|---|
| TD1_A5F1A11A0_ _ _ _ | RK DuoLine Z 60 | 405 | 60 | 80 | $62^{H7}$ 5 deep | $15^{H6}$ |
| TD1_A5F1B11A0_ _ _ _ | RK DuoLine Z 60 one ball rail guide with extended guide carriage | 495 | | | | |
| TD1_A2F1A_1A_ _ _ _ _ | RK DuoLine Z 80 | 468 | 80 | 100 | $75^{H7}$ 7 deep | $16^{H6}$ |
| TD1_A2F1B_1A_ _ _ _ _ | RK DuoLine Z 80 with extended guide carriage | 600 | | | | |
| TD1_A3F1A_1A_ _ _ _ _ | RK DuoLine Z 120 one ball rail guide | 606 | 120 | 115 | $90^{H7}$ 3,5 deep | $20^{H6}$ |
| TD1_A3F1B_1A_ _ _ _ _ | RK DuoLine Z 120 one ball rail guide with extended guide carriage | 750 | | | | |
| TD1_A4F1A_1A_ _ _ _ _ | RK DuoLine Z 120 two ball rail guides | 606 | | | | |
| TD1_A4F1B_1A_ _ _ _ _ | RK DuoLine Z 120 two ball rail guides with extended guide carriage | 750 | | | | |
| TD1_A1F1A_1A_ _ _ _ _ | RK DuoLine Z 160 | 630 | 160 | 130 | $90^{H7}$ 3,5 deep | $25^{H6}$ |
| TD1_A1F1B_1A_ _ _ _ _ | RK DuoLine Z 160 with extended guide carriage | 780 | | | | |

Total lenght = basic length + total travel (mm)

**Integrated linear encoder:**
1 = without
2 = with plug-in coupling and 20 m of cable
3 = with 20 m of cable

**Version:**
1 = Basic
2 = Protect

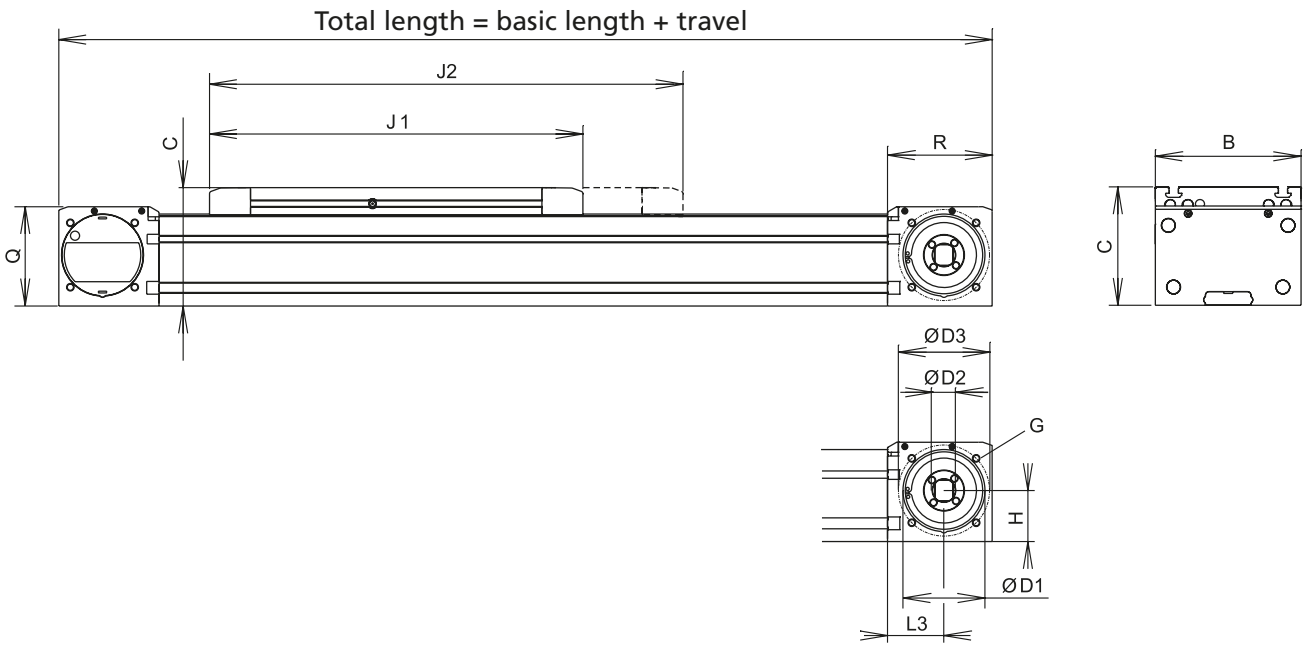


[mm]

| D3 | G | H | J1 | J2 | L3 | Q | R | max. travel | Mass [kg] | |
|---|---|---|---|---|---|---|---|---|---|---|
| | | | | | | | | | Basic length | pro 100 mm travel |
| 72,1±0.2 | M6-12 deep | 33.8 | 245 | – | 44 | 70 | 80 | 5753 | 4.65 | 0.54 |
| | | | – | 335 | | | | 5665 | 5.38 | 0.54 |
| 90.5±0.2 | M8-12 deep | 40.1 | 278 | – | 52 | 85 | 95 | 7722 | 7.84 | 0.83 |
| | | | – | 410 | | | | 7590 | 9.51 | 0.83 |
| 100±0.2 | M8-16 deep | 46.8 | 386 | – | 62 | 98 | 110 | 7614 | 16.33 | 1.19 |
| | | | – | 530 | | | | 7470 | 18.72 | 1.19 |
| | | | 386 | – | | | | 5614 | 16.33 | 1.19 |
| | | | – | 530 | | | | 5470 | 18.72 | 1.19 |
| 100±0.2 | M8-28 deep | 56 | 410 | – | 62 | 109 | 110 | 9010 | 25.76 | 1.80 |
| | | | – | 560 | | | | 8860 | 28.16 | 1.80 |

# RK DuoLine Z Safelock

**Order information:**

- Longer travel lengths on request



| Code No. | Type | Basic length | B | C | ØD1 | ØD2 | ØD3 |
|---|---|---|---|---|---|---|---|
| TD1_A3A1C_1_ _ _ _ _ | RK DuoLine Z Safelock 120 | 836 | 120 | 115 | 90 | $20^{H6}$ | 100±0.2 |
| TD1_A1A1C_1_ _ _ _ _ | RK DuoLine Z Safelock 160 | 820 | 160 | 130 | $90^{H7}$ | $25^{H6}$ | 100±0.2 |

Total length (basic length + travel) in mm

**Version:**
Q = Motor at top / Profile moves
L = Motor at top / Carriage moves
T = Motor at bottom / Carriage moves

| Q | L | T |
|---|---|---|
| 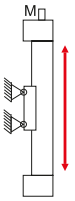 | 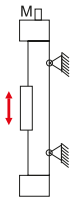 | 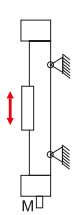 |

**Integrated position sensing system:**
1 = without
2 = with plug-in coupling and 20 m of cable
3 = with 20 m of cable

**Degree of protection:**
1 = Basic
2 = Protect (IP 40 via cover strip)

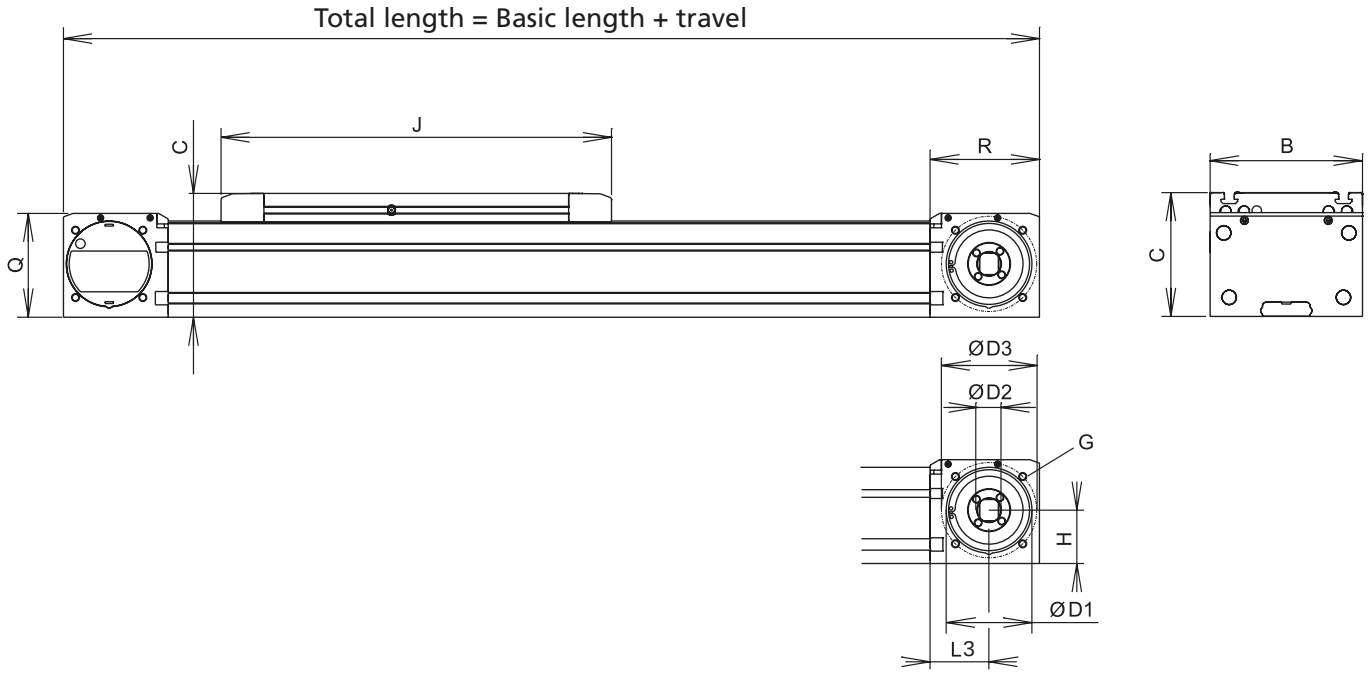


[mm]

| G | H | J | L | Q | R | Max. travel | Mass [kg] | |
|---|---|---|---|---|---|---|---|---|
| | | | | | | | Basic length | per 100 mm travel |
| M8-16 deep | 46.8 | 616 | 62 | 98 | 110 | 7384 | 21.27 | 1.19 |
| M8-28 deep | 56 | 600 | 62 | 109 | 110 | 9380 | 30.20 | 1.80 |

# RK DuoLine Z 60/80/120/160 – Fixing

## Fixation of payload RK DuoLine S/Z 80

- Two slot stone strips have been inserted in the guide carriage on which fittings can be securely attached in a variety of ways
- Profile slots in the guide carriage and guide profiles facilitate fixation

## RK DuoLine R/Z 60

*only with version with extended guide carriage

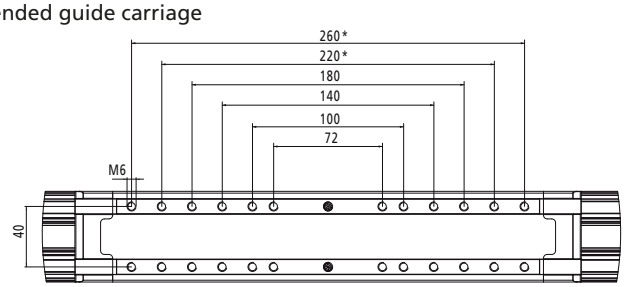


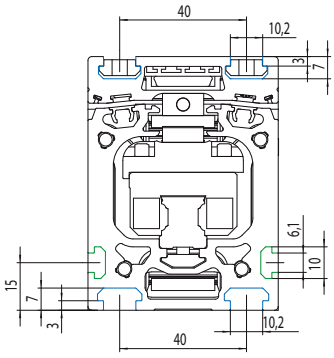


20 slot geometry
30 slot geometry

## RK DuoLine R/Z 80

*only with version with extended guide carriage

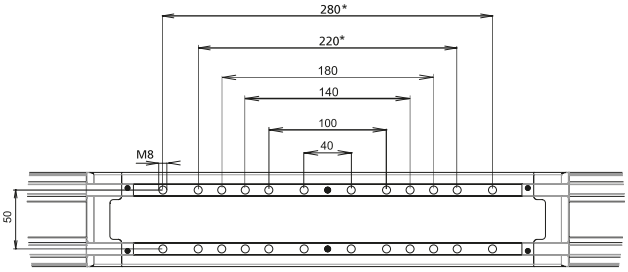


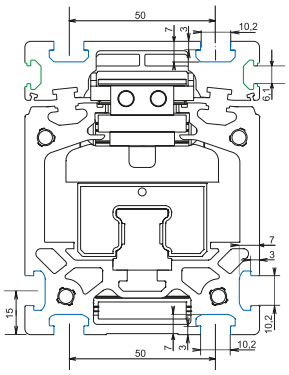


20 slot geometry
30 slot geometry

## RK DuoLine R/Z 120

*only with version with extended guide carriage

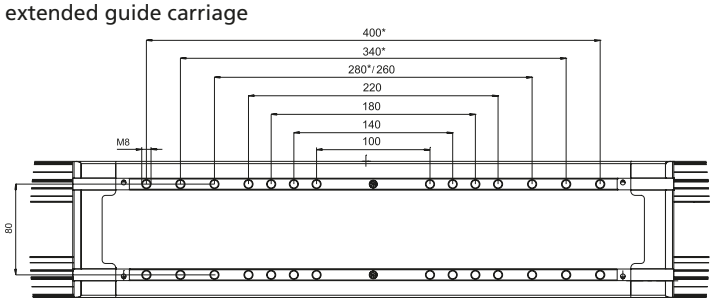


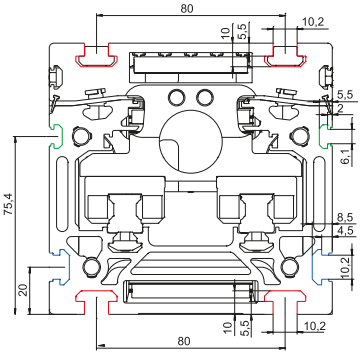


20 slot geometry
30 slot geometry
40 slot geometry

## RK DuoLine Z 160

*only with version with extended guide carriage

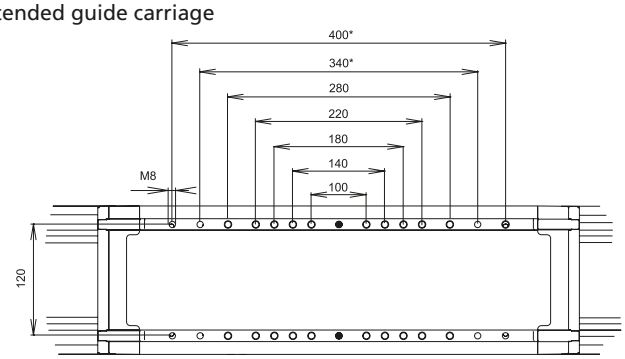


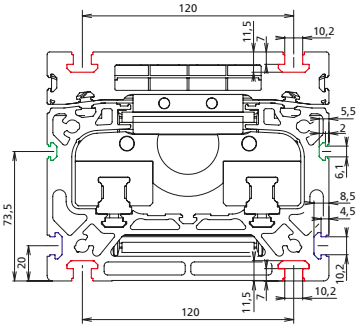


20 slot geometry
30 slot geometry
40 slot geometry

## Clamping strips

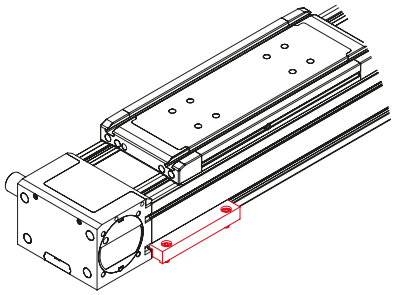

Fig.1: Ground assembly

- Clamping strips facilitate fixation of the linear unit to the chassis or two units to a crossing table

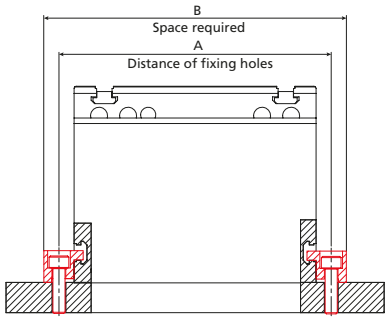


**Material**:
Natural anodised aluminium, galvanised fixation material.
**Scope of delivery**:
2 clamping strips with fixation material

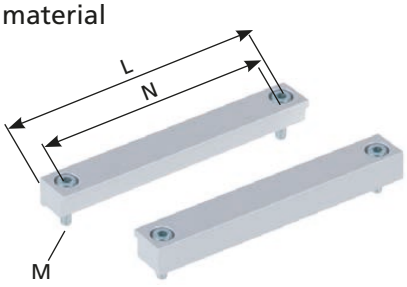


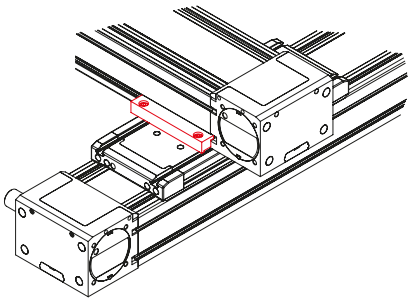

Fig.2: Crossing units

[mm]

| Code No. | Type | Abb. | A | B | L | M | N |
|---|---|---|---|---|---|---|---|
| 91818 | RK DuoLine 60 ground assembly | 1 | 72 | 91 | 57 | M6 | 40 |
| | RK DuoLine 60 crossing to 60 | 2 | | | | | |
| 91806 | RK DuoLine 80 ground assembly | 1 | 100 | 122 | 76 | M8 | 50 |
| | RK DuoLine 80 crossing to 80 | 2 | | | | | |
| 91812 | RK DuoLine 120 ground assembly | 1 | 140 | 160 | 116 | M8 | 80 |
| | RK DuoLine 120 crossing to 120 | 2 | | | | | |
| | RK DuoLine 160 crossing to 120 | 2 | | | | | |
| 91802 | RK DuoLine 160 ground assembly | 1 | 180 | 200 | 156 | M8 | 120 |
| | RK DuoLine 160 crossing to 160 | 2 | | | | | |
| | RK DuoLine 120 crossing to 160 | 2 | | | | | |

**Order instruction square nut:**

- **Purchase only in lot sizes and a multiple of that, see product table below**

## Slot stones

- Slot stones can be inserted and positioned at the guide profile and guide carriage

**Material:** galvanised steel

**Slot stone -B-**
can be swivelled into the slot

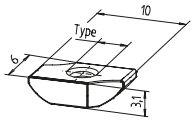


**Slot stone -N-**
can be slid into the slot

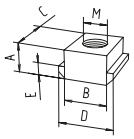


**Slot stone -K-**
can be swivelled into the slot

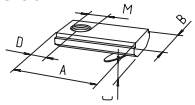


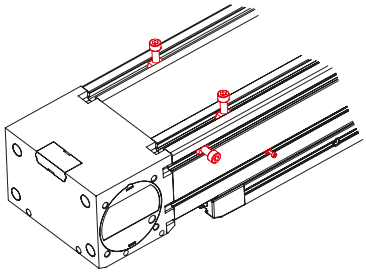

View of DuoLine from below

[mm] 


| Code No. | Type | lot sizes | Slot geometry | A | B | C | D | E | M | F [N] |
|---|---|---|---|---|---|---|---|---|---|---|
| **Slot stone -B-** | | | | | | | | | | |
| E00017CEE | M3 | 10, 20, 30... pcs | 20 | | | | | | | |
| E00058CEE | M4 | 10, 20, 30... pcs | 20 | | | | | | | |
| **Slot stone -N-** | | | | | | | | | | |
| 4006202 | M8 | 10, 20, 30... pcs | 30 | 5 | 10 | 13 | 13 | 3 | M8 | 4000 |
| 4026206 | M8 | 10, 20, 30... pcs | 40 | 8 | 10 | 13 | 15 | 4 | M8 | 9000 |
| **Slot stone -K-** | | | | | | | | | | |
| 4006211 | M5 | 10, 20, 30... pcs | 30 | 21 | 12 | 4 | 7 | – | M5 | 5000 |
| 4006212 | M6 | 10, 20, 30... pcs | 30 | 21 | 12 | 4 | 7 | – | M6 | 5000 |
| 4016212 | M6 | 10, 20, 30... pcs | 40 | 21 | 14 | 4 | 7 | – | M6 | 5000 |

## Centering Sets for RK DuoLine

- The following positions could be defined exactly during the design process per set
  - Load capacity
  - Linear unit
- Reproductable position of the load capacity
- Reduced assembly/disassembly time of the load capacity or the linear unit
- Accuracy of the centering bolts h6
- **To use for all RK DuoLine linear units in Basic and Protect design from October 2015 production date**

**Scope of delivery per set:**
2 centering bolts and fixing material

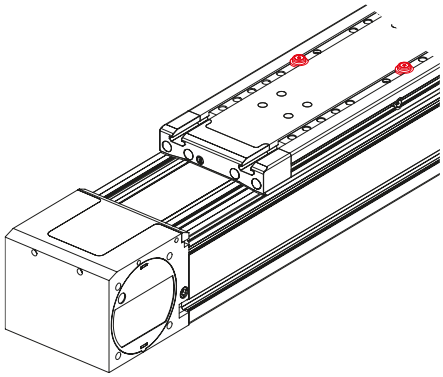

Abb.1: Slide centering

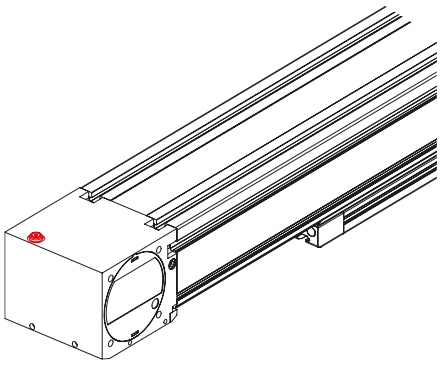

Abb.2: Base centering

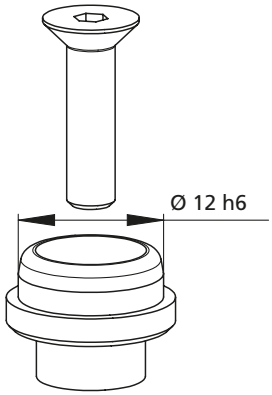


**Size -A-**

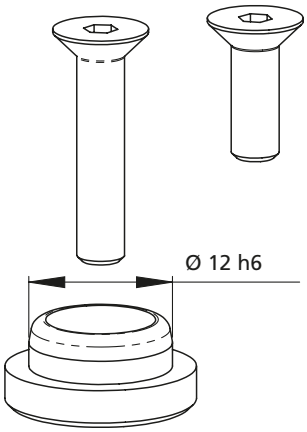


**Size -B-**

| Code No. | Type | Use for |
|---|---|---|
| 91898 | Centering Set Size -A- | Slide centering RK DuoLine Z 60 + Z 80 |
| 91899 | Centering Set Size -B- | Slide centering RK DuoLine Z 120 + Z 160<br>Base centering RK DuoLine Z 60 + Z 80 + Z 120 + Z 160 |

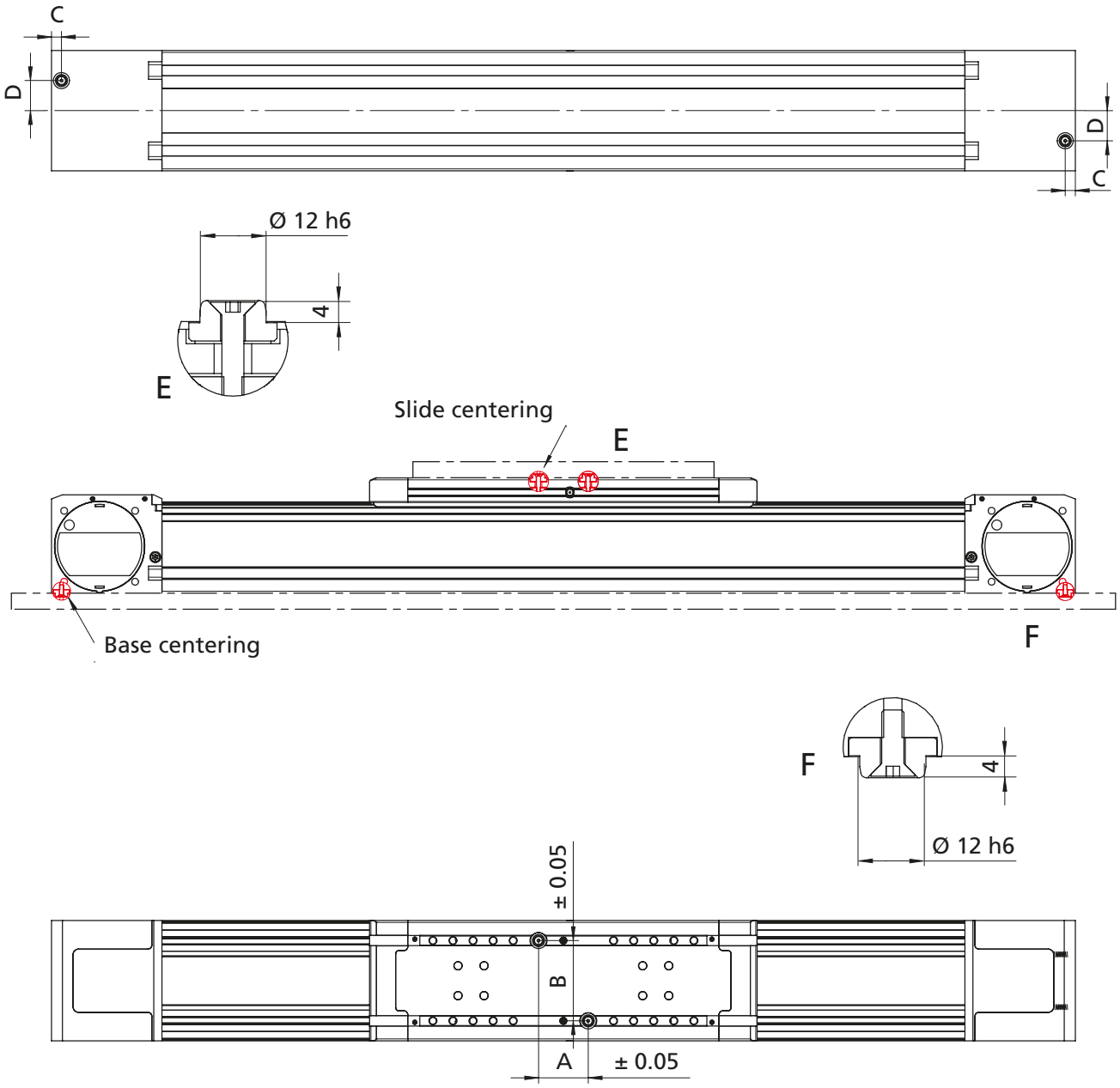


[mm]

| Type | A | B | C | D |
|---|---|---|---|---|
| RK DuoLine Z 60 | 42 | 40 | 10 | 0 |
| RK DuoLine Z 60 with extended guide carriage | 48 | 40 | 10 | 0 |
| RK DuoLine Z 80 | 65 | 50 | 10 | 15 |
| RK DuoLine Z 80 with extended guide carriage | 70 | 50 | 10 | 15 |
| RK DuoLine Z 120 | 49.5 | 80 | 10 | 30 |
| RK DuoLine Z 120 with extended guide carriage | 250 | 80 | 10 | 30 |
| RK DuoLine Z 160 | 70 | 120 | 10 | 40 |
| RK DuoLine Z 160 with extended guide carriage | 366 | 120 | 10 | 40 |

## Motor adapter kit for RK AC servomotors

- Servomotors from the RK standard range can be easily connected
- Complete motor adapter kits manufactured to your specifications on request

**Scope of delivery:**
Motor adapter kit, elastomer coupling and fixation material

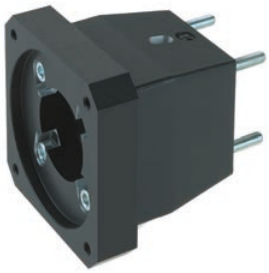

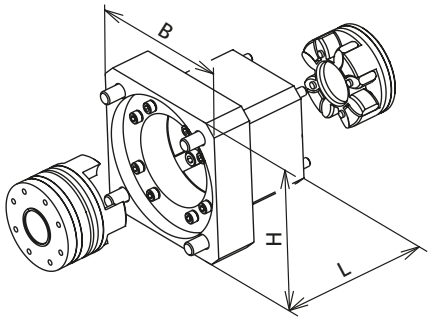


| Type | Servo motors without gearbox | | Servo motors with gearbox | | | | | Three phase motors | |
|---|---|---|---|---|---|---|---|---|---|
| | RK-AC 240 | RK-AC 470 | RK-AC 112 | RK-AC 260<br>RK-AC 280 | RK-AC 345 | RK-AC 800 | RK-AC 1252<br>RK-AC 1776<br>RK-AC 2521 | 90/120 W | 180/250 W |
| DuoLine Z 60 | 949376 | – | 949374 | 949375 | – | – | – | 949377 | 949378 |
| DuoLine Z 80 | – | 949357 | 949350 | 949353 | 949354 | – | – | 949355 | 949356 |
| DuoLine Z 120 | | | – | 949371 | 949370 | 949370 | – | 949372 | 949373 |
| DuoLine Z 160 | | | – | – | 949344 | 949344 | 949345 | – | – |

## Drive shaft

- The RK DuoLine Z is fitted as standard with a hollow shaft
- This can be retrofitted with a drive shaft as an optional extra

**Scope of delivery:**
Drive shaft with fixation material



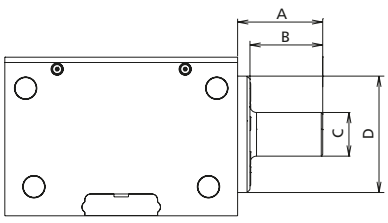


For metal bellows coupling

[mm]

| Code No. | Type | Version | A | B | C | D |
|---|---|---|---|---|---|---|
| 91328 | RK DuoLine Z 60 | Drive shaft for metal bellows coupling | 28,6 | 25 | 16 | 44 |
| 91312 | RK DuoLine Z 80 | | 35 | 31,5 | 20 | 52 |
| 91320 | RK DuoLine Z 120 | | 45,5 | 39 | 25 | 74 |
| 9720000 | RK DuoLine Z 160 | | 58,5 | 50 | 30 | 80 |

## Synchronising shaft

- For torque transmission with parallel linear units
- Synchronisation of the guide carriages by zero point alignment

**Scope of delivery:**
Synchronising shaft with fixation material

**Max. transfer torque:**

| | |
|---|---|
| RK DuoLine Z 60 | 28 Nm |
| RK DuoLine Z 80 | 67 Nm |
| RK DuoLine Z 120 | 141 Nm |
| RK DuoLine Z 160 | 220 Nm |

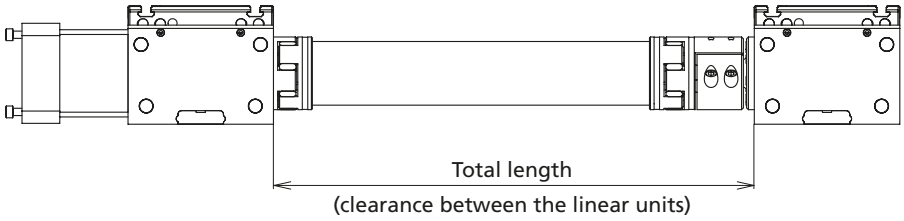


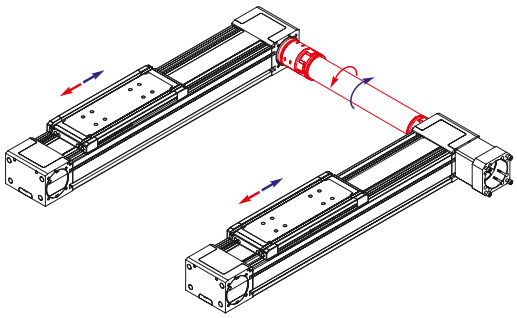

Fig. shows synchronising shaft

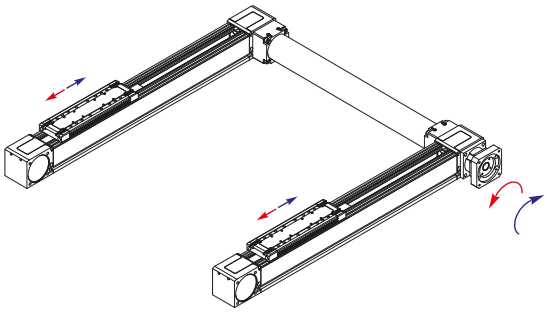

Fig. shows synchronising shaft with protection

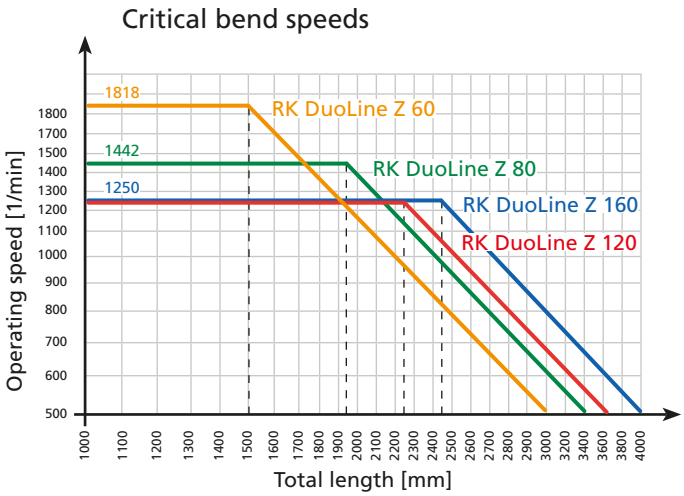


[mm]

| Code No. | Type | Basic length (minimum length) | Max. length (clearance) | Weight [kg] | |
|---|---|---|---|---|---|
| | | | | Basic length | per 100 mm travel |
| 92548_ _ _ _ | Synchronising shaft RK DuoLine Z 60 | 118 | 2985 | 0,53 | 0,09 |
| 92538_ _ _ _ | Synchronising shaft RK DuoLine Z 80 | 144 | 3400 | 1,07 | 0,12 |
| 92519_ _ _ _ | Synchronising shaft RK DuoLine Z 120 | 175 | 3994 | 1,38 | 0,15 |
| 92510_ _ _ _ | Synchronising shaft RK DuoLine Z 160 | 220 | 3991 | 3,42 | 0,22 |

Total length [mm]

[mm]

| Code No. | Type | Basic length (minimum length) | Max. length (clearance) | Weight [kg] | |
|---|---|---|---|---|---|
| | | | | Basic length | per 100 mm travel |
| 92521700_ _ _ _ | Synchronising shaft RK DuoLine Z 60 with protection | 118 | 2985 | 1,0 | 0,24 |
| 92521710_ _ _ _ | Synchronising shaft RK DuoLine Z 80 with protection | 144 | 3400 | 1,96 | 0,29 |
| 92521720_ _ _ _ | Synchronising shaft RK DuoLine Z 120 with protection | 175 | 3994 | 2,53 | 0,36 |
| 92521730_ _ _ _ | Synchronising shaft RK DuoLine Z 160 with protection | 220 | 3991 | 5,38 | 0,44 |

Total length [mm]

## Mechanical limit switch

- External fixing on the guide profile

**Scope of delivery:**
Limit switch with set of fastenings

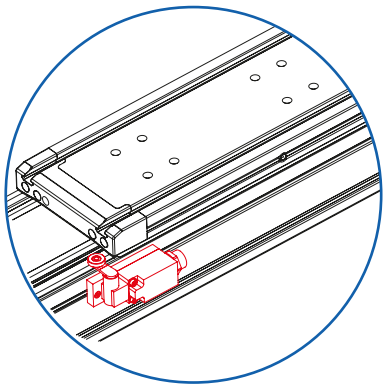

| | |
|---|---|
| Voltage | max. 230 V AC |
| Max. switching current | 4 A |
| Max. starting current | 10 A |
| Operating frequency | max. 5000/h |
| Mechanical lifetime | 20 x $10^6$ cycles |
| Axis lever adjustment | locking by 360° |
| Protection class | IP 67 |
| Ambient temperature | -30°C to +80°C |

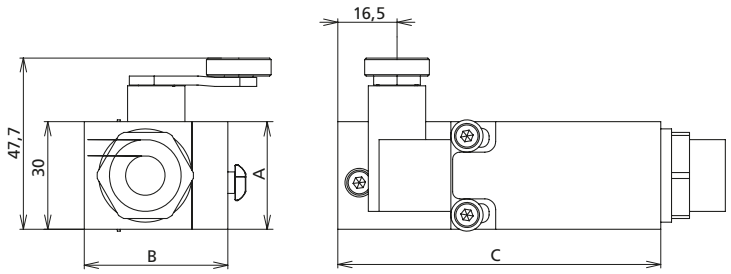


| Code No. | Type | A | B | C | Version |
|---|---|---|---|---|---|
| 92848 | RK DuoLine 60 | 49 | 39 | 82 | NO / NC, mechanical limit switch |
| 91919 | RK DuoLine 80 | 63 | 40 | 83 | |
| 92701 | RK DuoLine 120 | 31 | 40 | 97 | |
| 91910 | RK DuoLine 160 | 30 | 40 | 90 | |

## External inductive limit switch

- External fixing on the guide profile

**Scope of delivery:**
Limit switch with set of fastenings

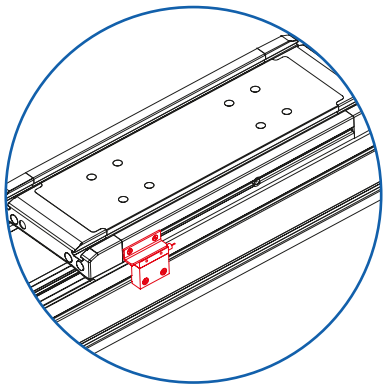

| | |
|---|---|
| Voltage | 10...30 VDC |
| Max. switching current | 100 mA |
| Operating frequency | Max. 5 kHz |
| Mechanical lifetime | independent of operating cycles |
| Operating distance | 1.5 mm |
| Protection class | IP 67 |
| Cable length | 5 m* |
| Ambient temperature | -25°C to +70°C |

*Other cable lengths available on request.

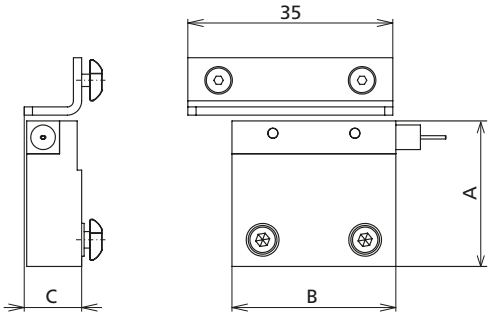


| Code No. | Type | A | B | C | Version |
|---|---|---|---|---|---|
| 92838 | RK DuoLine 60 | 52,8 | 25 | 10 | NO, External inductive limit switch |
| 92819 | RK DuoLine 80 | 71,5 | 25 | 10 | |
| 92840 | RK DuoLine 120 | 22 | 40 | 14 | |
| 92810 | RK DuoLine 160 | 35,5 | 40 | 14 | |

## Internal inductive limit switch

- Limit switch integrated in the guide profile - no protruding contours

**Scope of delivery:**
Limit switch with set of fastenings

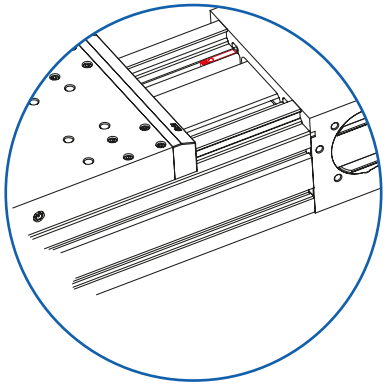

| Code No. | Type | Version |
|---|---|---|
| 92828 | RK DuoLine 60 | NC, Internal inductive limit switch |
| 92820* | RK DuoLine 80<br>RK DuoLine 120<br>RK DuoLine 160 | |

*On this limit switch, the slot must be sealed off with a cover profile

## Cover profile

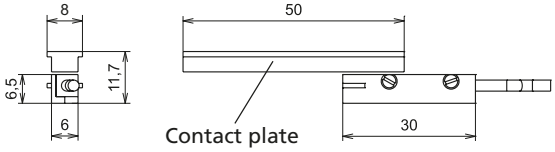


| Code No. | Version | | |
|---|---|---|---|
| E00024DAC | bar | black | 2.000 mm |

# RK DuoLine Z / R Clean Key features / technical benefits

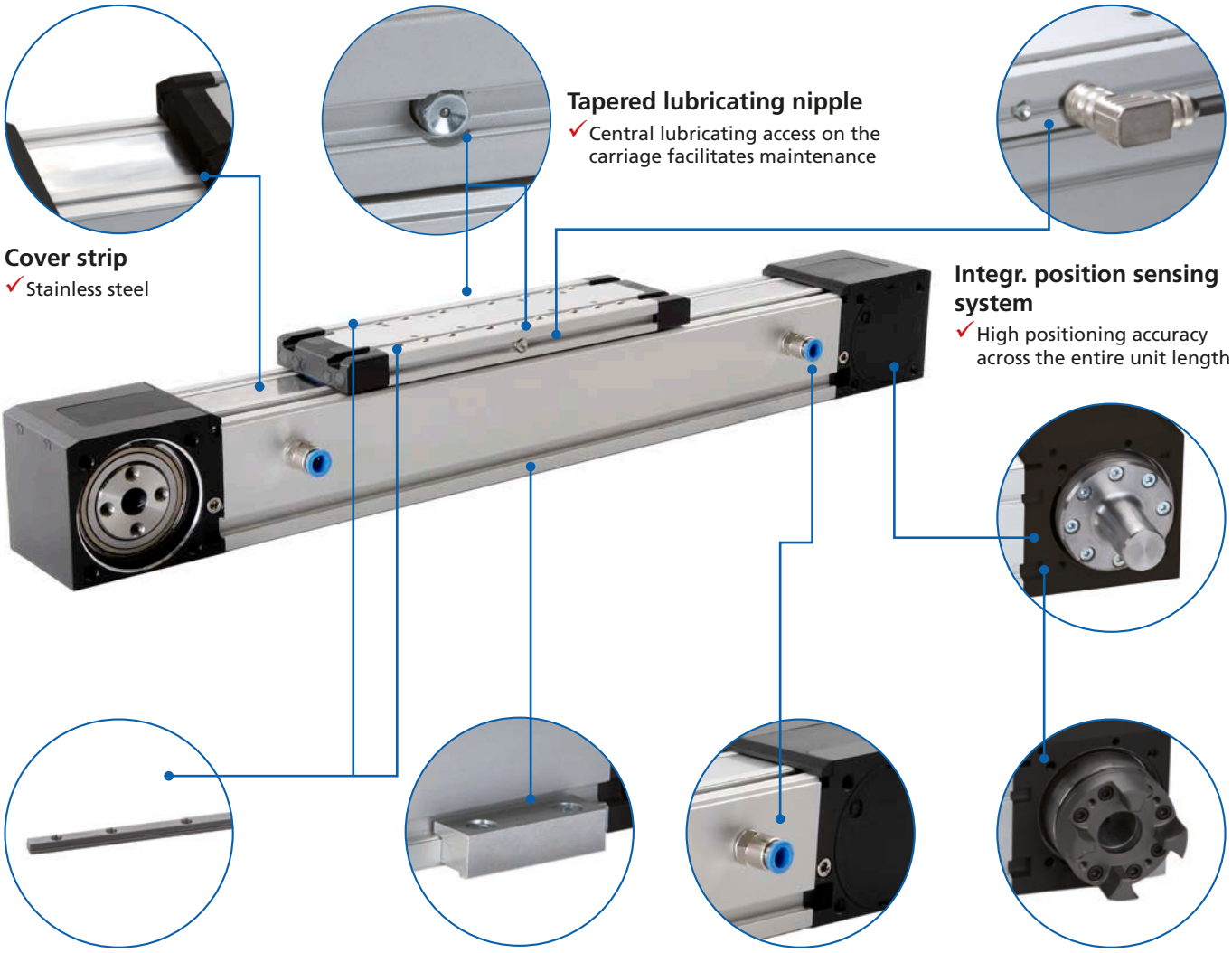

**Cover strip**
✓ Stainless steel

**Tapered lubricating nipple**
✓ Central lubricating access on the carriage facilitates maintenance

**Integr. position sensing system**
✓ High positioning accuracy across the entire unit length

**Slot stone strip**
✓ To hold your load securely
✓ Nickel-plated

**Clamping strip**
✓ Secures the axis reliably

**Vacuum extraction**
✓ Optional

**Variable motor connection**
✓ For metal bellows coupling
✓ For elastomer coupling

**Motor shaft configuration**
✓ Can be modified at a later stage

## Key features

### General

- All external steel parts nickel-plated or made of stainless steel
- Suitability according to EN ISO 14644-1 for clean rooms
- Optionally with or without vacuum extraction
- High efficiency
- Low no-load torque
- Central lubricating access on the carriage facilitates maintenance

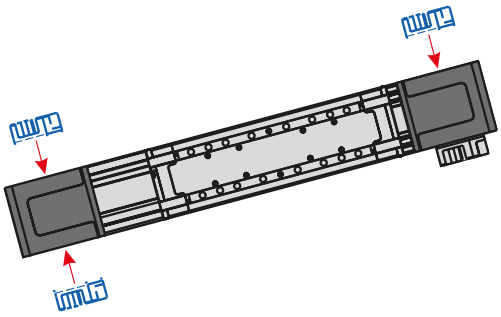

### RK DuoLine Z Clean (toothed-belt drive)

- Cover band made from stainless steel
- Flexible positioning of motor thanks to pulley boxes with hollow shafts
- Repeat accuracy ±0.05 mm

# RK DuoLine - Table of contents


## Properties / Technical data

- Load characteristic ..... 412
- General informations/operation conditions.. 413
- Cleanroom air categories ..... 413

## Version
(Dimensions, order numbers)

**Place-Tec**

- RK DuoLine R 60/80 Clean ..... 414
- RK DuoLine Z 60 Clean ..... 416
- RK DuoLine Z 80 Clean ..... 416

## Accessories

**Fixing**

- Fixation of payload ..... 418
- Clamping strips..... 419
- Slot stones ..... 419

**Drive**

- Motor adapter kit ..... 420
- Drive shaft ..... 421
- Synchronising shaft..... 422

**Position determination**

- Limit switch ..... 423

## Calculation of the load characteristic to define the lifetime

- The lifetime of linear units are in accordance with the average loads and moments of an application. The load characteristic can approximately calculated by following equation with simultaneously appearing load and moments.

$$\text{Load characteristic} = \frac{\text{Application values (z.B. Fy)}}{\text{Catalog values (z.B. Fy}_{max}\text{)}}$$

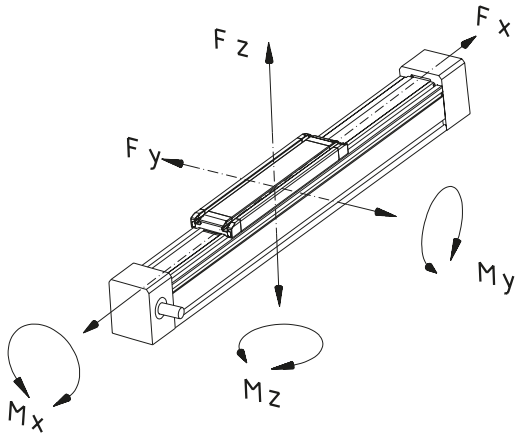


$$\textbf{Load characteristic } B_K = \frac{Fy}{Fy_{max}} + \frac{Fz}{Fz_{max}} + \frac{Mx}{Mx_{max}} + \frac{My}{My_{max}} + \frac{Mz}{Mz_{max}} \leq 1$$

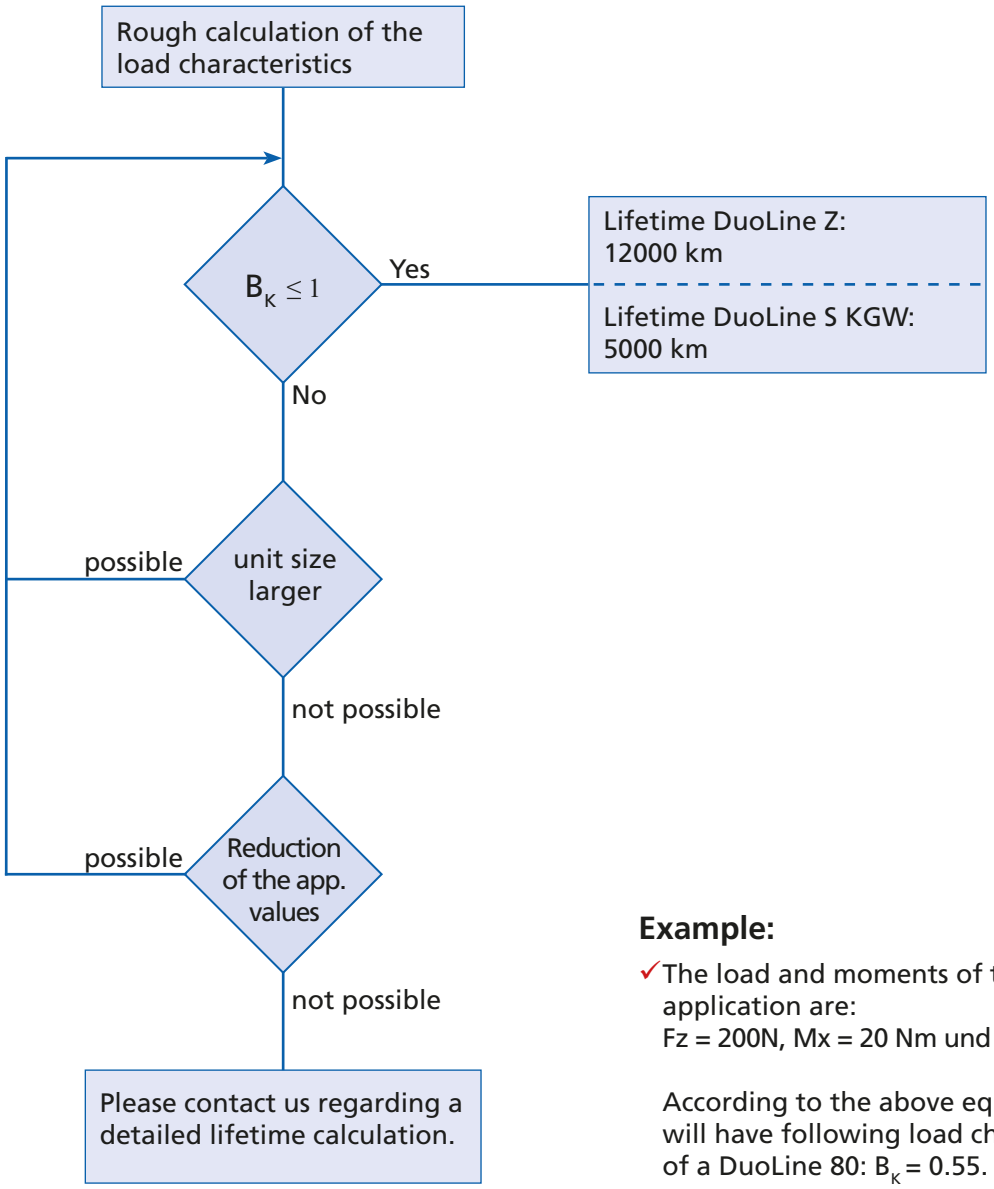


**Example:**

✓ The load and moments of the application are:
Fz = 200N, Mx = 20 Nm und Mz = 45 Nm

According to the above equation you will have following load characteristic of a DuoLine 80: $B_K = 0.55$.

## General information / operating conditions

| | RK DuoLine Z 60 Clean | RK DuoLine Z 80 Clean |
|---|---|---|
| Guidance system | 1 Ball rail system | |
| Installation position | any position | |
| Max. driving torque | 28 Nm | 67 Nm |
| Max. speed | 1 m/s | 2 m/s |
| Max. acceleration | 4 m/s² | 5 m/s² |
| Repeat accuracy | ± 0,05 mm | ± 0,05 mm |
| Positioning accuracy | only without integrated linear encoder<br>± 0,1/300 mm | with integrated linear encoder<br>± (0.025 + 0.01 x L) mm; L = travel in meters |
| Max. no-load torque | 2 Nm | 2,2 Nm |
| Drive | HTD-Belts from polyurethan,<br>Pitch 5 mm, Width 20 mm | HTD-Belts from polyurethan,<br>Pitch 8 mm, Width 30 mm |
| Active Ø pulley wheel | 52,52 mm | 66,21 mm |
| Pulley wheel circum-ference | 165 mm | 208 mm |
| Ambient temperature | 0 to +60°C | 0 to +60°C |

## Dynamic load data

Force [N]
Torque [Nm]

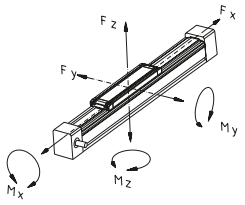


| Toothed-belt drive | | | | | | |
|---|---|---|---|---|---|---|
| Load data | Fx | Fy | Fz | Mx | My | Mz |
| Standard guide carriagew | | | | | | |
| RK Duoline Z 60 Clean | 630 | 700 | 2500 | 48 | 160 | 140 |
| RK Duoline Z 80 Clean | 1400 | 1000 | 4100 | 100 | 340 | 300 |
| Extended guide carriage | | | | | | |
| RK Duoline Z 60 Clean | 630 | 700 | 2500 | 48 | 250 | 220 |
| RK Duoline Z 80 Clean | 1400 | 1000 | 4100 | 100 | 590 | 520 |

## Suitable for use in air purity levels according to EN ISO 14644-1

You find the documents and certificates with the test parameters on the website **www.rk-rose-krieger.com**

| Type | Clean room categories | | | | |
|---|---|---|---|---|---|
| | ISO 1 | ISO 5 | ISO 6 | ISO 7 | ISO 8 |
| RK DuoLine Z 60 Clean without suction | | | 0,25 m/s | 0,5 m/s | 1 m/s |
| RK DuoLine Z 60 Clean with suction | 0,25 m/s; 0,5 m/s and 1,0 m/s | | | | |
| RK DuoLine Z 80 Clean without suction | | 0,5 m/s | 1 m/s | 2 m/s | |
| RK DuoLine Z 80 Clean with suction | 0,25 m/s; 0,5 m/s and 1,0 m/s | | | | |

## Geometric moment of inertia

[$cm^4$]

| | Iy | Iz |
|---|---|---|
| RK DuoLine Z 60 Clean | 52,54 $cm^4$ | 67,41 $cm^4$ |
| RK DuoLine Z 80 Clean | 127,90 $cm^4$ | 172,80 $cm^4$ |

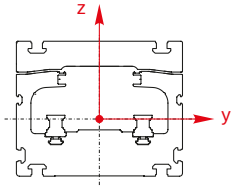

# RK DuoLine R 60 / 80 Clean – Versions

**Order information:**

- Longer travel lengths on request
- Integrated linear encoder as Option for size 80

**Version:** ■ **Guide**

Ideal as additional / secondary support for the Duoline with toothed belt or spindle. Identical construction to Z/S 60 and 80, but without drive



| Code No. | Type | Basic length | B | C |
|---|---|---|---|---|
| TD17A5T1A11_0 _ _ _ _ | RK DuoLine R 60 Clean | 295 | 60 | 80 |
| TD17A5T1B11_0 _ _ _ _ | RK DuoLine R 60 Clean with extended guide carriage | 385 | | |
| TD17A2T1A11_0 _ _ _ _ | RK DuoLine R 80 Clean | 352 | 80 | 100 |
| TD17A2T1B11_0 _ _ _ _ | RK DuoLine R 80 Clean with extended guide carriage | 484 | | |

Total lenght = basic length + total travel (mm)

A = without connection for vacuum suction
C = with connection for vacuum suction

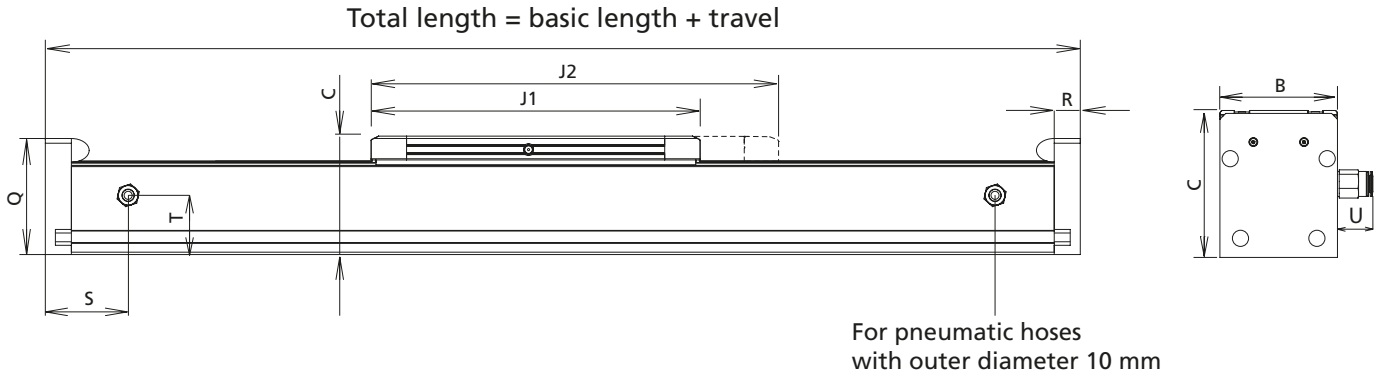


[mm]

| J1 | J2 | Q | R | S | T | U | Max. travel | Mass [kg] | |
|---|---|---|---|---|---|---|---|---|---|
| | | | | | | | | Basic length | per 100 mm travel |
| 245 | – | 70 | 22 | 72 | 38 | 24 | 3587 | 3,73 | 0,54 |
| – | 335 | | | | | | 3497 | 4,46 | 0,54 |
| 278 | – | 97 | 22 | 72 | 50 | 24 | 7692 | 5,22 | 0,83 |
| – | 410 | | | | | | 7560 | 6,89 | 0,83 |

**Order information:**

- Longer travel lengths on request
- Also available without screw drive as a torque support
- Version with vacuum extraction as option

## Timing-belt unit RK DuoLine Z Clean

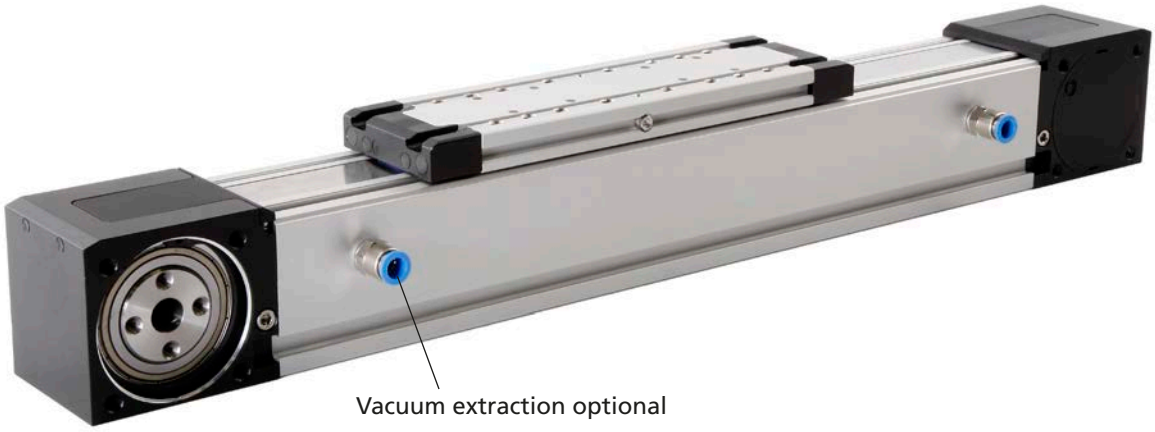


| Code No. | Type | Basic length | B | C | D1 | D2 |
|---|---|---|---|---|---|---|
| TD15A5F1A12_ 0 _ _ _ _ | RK DuoLine Z 60 Clean | 405 | 60 | 80 | $62^{H7}$ 5 deep | $15^{H6}$ |
| TD15A5F1B12_ 0 _ _ _ _ | RK DuoLine Z 60 Clean with extended guide carriage | 495 | | | | |
| TD15A2F1A_2_ _ _ _ _ _ | RK DuoLine Z 80 Clean | 468 | 80 | 100 | $75^{H7}$ 7 deep | $16^{H6}$ |
| TD15A2F1B_2_ _ _ _ _ _ | RK DuoLine Z 80 Clean with extended guide carriage | 600 | | | | |

Total lenght = basic length + total travel (mm)

A = without connection for vacuum extraction
C = with connection for vacuum extraction

**Integrated linear encoder**
1 = without
2 = with plug-in coupling and 20 m of cable
3 = with 20 m of cable

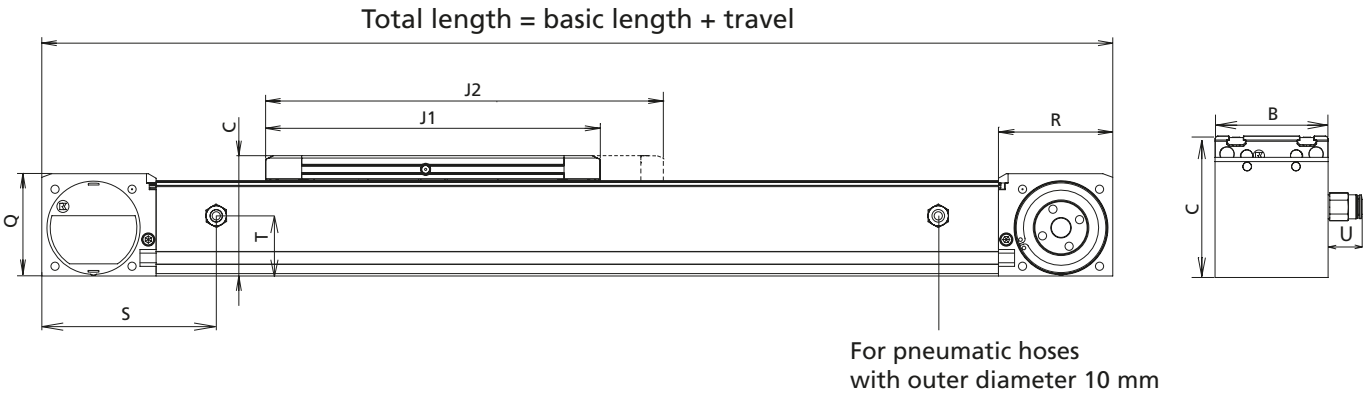


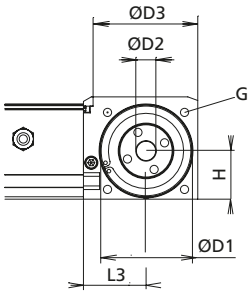


[mm]

| D3 | G | H | J1 | J2 | L3 | Q | R | S | T | U | max. travel | Mass [kg] | |
|---|---|---|---|---|---|---|---|---|---|---|---|---|---|
| | | | | | | | | | | | | Basic length | per 100 mm travel |
| 72,1±0,2 | M6-12 deep | 33,8 | 245 | – | 44 | 70 | 80 | 130 | 38 | 24 | 5753 | 4,65 | 0,54 |
| | | | – | 335 | | | | | | | 5665 | 5,38 | 0,54 |
| 90,5±0,2 | M8-12 deep | 40,1 | 278 | – | 52 | 85 | 95 | 145 | 50 | 24 | 7722 | 7,84 | 0,83 |
| | | | – | 410 | | | | | | | 7590 | 9,51 | 0,83 |

# Fixation

## Fixation of payload

- Two slot stone strips have been inserted in the guide carriage on which fittings can be securely attached in a variety of ways
- Profile slots in the guide carriage and guide profiles facilitate fixation

## RK DuoLine R/Z 60

*only with version with extended guide carriage

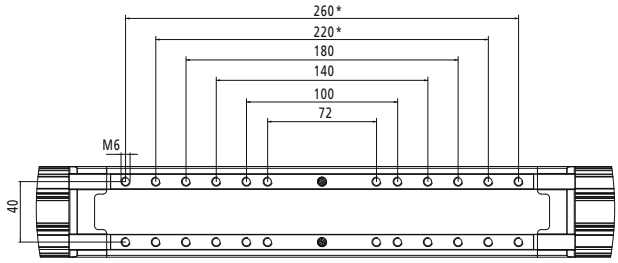


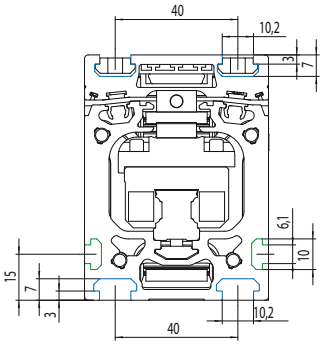


20 slot geometry

30 slot geometry

## RK DuoLine R/Z 80

*only with version with extended guide carriage

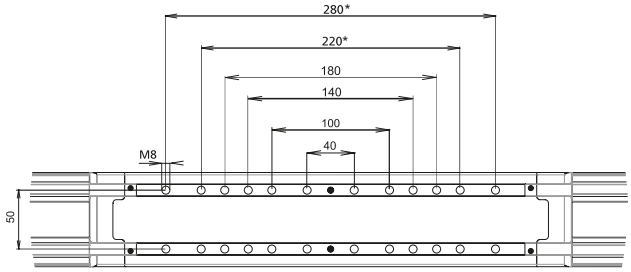


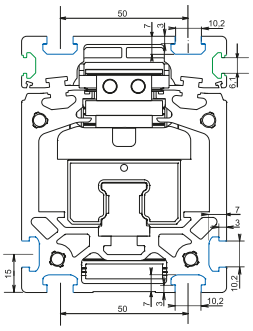


20 slot geometry

30 slot geometry

## Clamping strips

- Clamping strips facilitate fixation of the linear unit to the chassis or two units to a crossing table

**Material:**
Natural anodised aluminium, fixation material stainless steel or nickel-plated
**Scope of delivery:**
2 clamping strips with fixation material

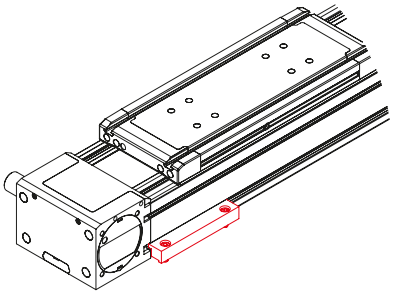

Fig.1: Ground assembly

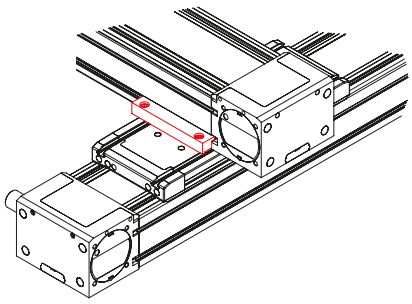

Fig.2: Crossing units

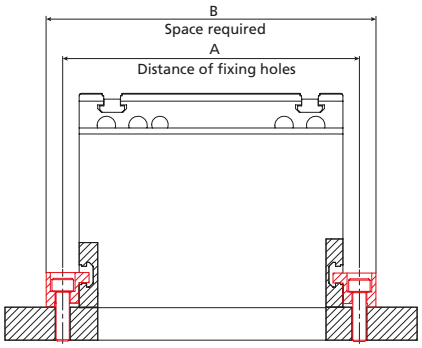


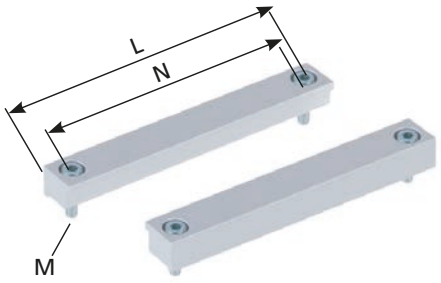


[mm]

| Code No. | Type | Fig. | A | B | L | M | N |
|---|---|---|---|---|---|---|---|
| 91819 | RK DuoLine 60 ground assembly | 1 | 72 | 91 | 57 | M6 | 40 |
| | RK DuoLine 60 crossing to 60 | 2 | | | | | |
| 91809 | RK DuoLine 80 ground assembly | 1 | 100 | 122 | 76 | M8 | 50 |
| | RK DuoLine 80 crossing to 80 | 2 | | | | | |

**Order instruction slot stones:**

- **Purchase only in lot sizes and a multiple of that, see product table below**

- Slot stones can be inserted and positioned at the guide profile and guide carriage

**Material:** Steel, nickel-plated or stainless steel

## Slot stones

**Slot stone -B-**
can be swivelled into the slot

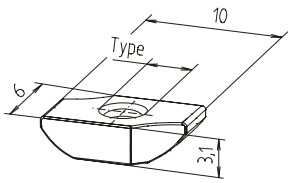


**Slot stone -N-**
can be slid into the slot

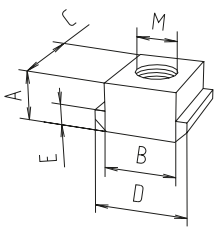


**Slot stone -P- Version K**
can be slid into the slot

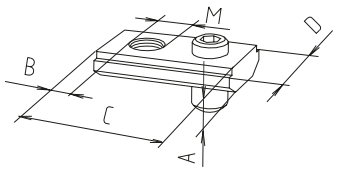


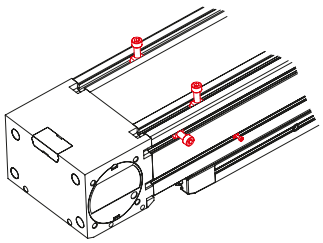

View of DuoLine from below

[mm] 


| Code No. | Type | lot sizes | Material | Slot geometry | A | B | C | D | E | M | F [N] |
|---|---|---|---|---|---|---|---|---|---|---|---|
| **Slot stone -B-** | | | | | | | | | | | |
| E00017CSE | M3 | 10, 20, 30... pcs | Nickel-plated | 20 | | | | | | | |
| E00058CSE | M4 | 10, 20, 30... pcs | Nickel-plated | 20 | | | | | | | |
| **Slot stone -N-** | | | | | | | | | | | |
| 400B202 | M8 | – | Nickel-plated | 30 | 5 | 10 | 13 | 13 | 3 | M8 | 4000 |
| 40092021 | M8 | 10, 20, 30... pcs | Stainless steel | 30 | 5 | 10 | 13 | 13 | 3 | M8 | 4000 |
| **Slot stone -P- Version K** | | | | | | | | | | | |
| 4009214 | M5 | 10, 20, 30... pcs | Stainless steel | 30 | 4 | 7 | 20 | 12 | - | M5 | 5000 |
| 4009216 | M6 | 10, 20, 30... pcs | Stainless steel | 30 | 4 | 7 | 20 | 12 | - | M6 | 5000 |

## Motor adapter kit for RK AC servomotors

- Servomotors from the RK standard range can be easily connected
- Complete motor adapter kits manufactured to your specifications on request

**Scope of delivery:**
Motor adapter kit, elastomer coupling and fixation material



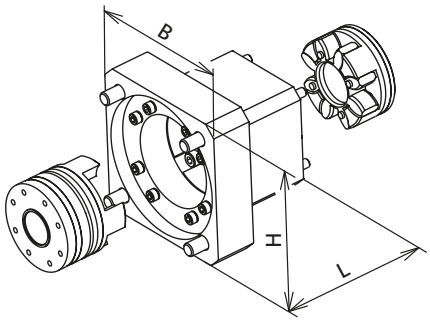


| Type | Servo motors without gearbox | | |
|---|---|---|---|
| | RK-AC 118 | RK-AC 240 | RK-AC 470 |
| DuoLine Z 60 Clean | – | 949458 | – |
| DuoLine Z 80 Clean | – | – | 949461 |

| Type | Servo motors with gearbox | | |
|---|---|---|---|
| | RK-AC 112 | RK-AC 260<br>RK-AC 280 | RK-AC 345 |
| DuoLine Z 60 Clean | 949459 | 949460 | – |
| DuoLine Z 80 Clean | 949462 | 949463 | 949464 |

## Drive shaft

- The RK DuoLine Z is fitted as standard with a hollow shaft
- This can be retrofitted with a drive shaft as an optional extra

**Scope of delivery:**
Drive shaft with fixation material

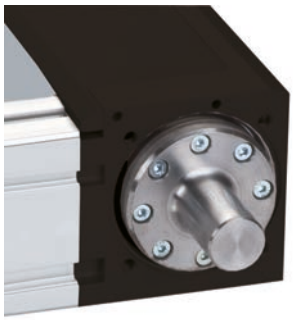

For metal bellows coupling

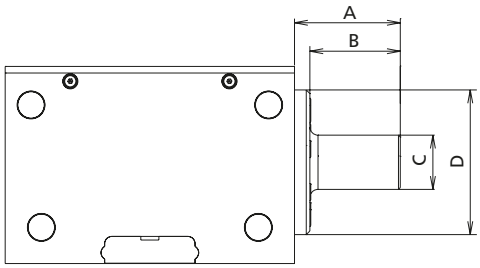


[mm]

| Code No. | Type | Version | A | B | C | D |
|---|---|---|---|---|---|---|
| 91325 | RK DuoLine Z 60 Clean | Drive shaft for metal bellows coupling | 28,6 | 25 | 16 | 44 |
| 91326 | RK DuoLine Z 80 Clean | | 35 | 31,5 | 20 | 52 |

## Synchronising shaft

- For torque transmission with parallel linear units
- Synchronisation of the guide carriages by zero point alignment

**Scope of delivery:**
Synchronising shaft with fixation material

**Max. transfer torque:**

| | |
|---|---|
| RK DuoLine Z 60 Clean | 28 Nm |
| RK DuoLine Z 80 Clean | 67 Nm |

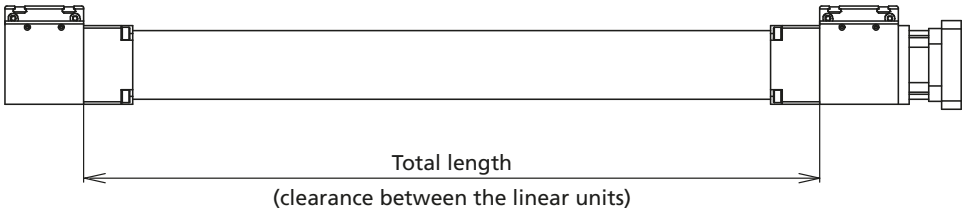


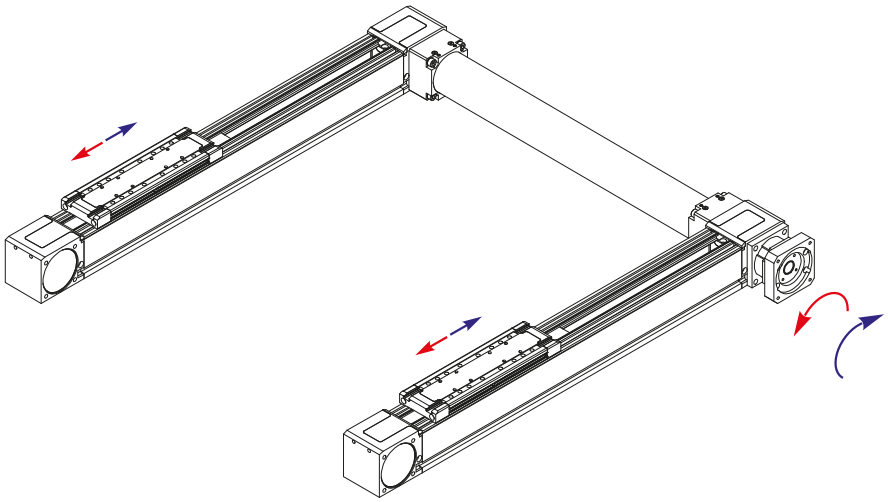

Critical bend speeds

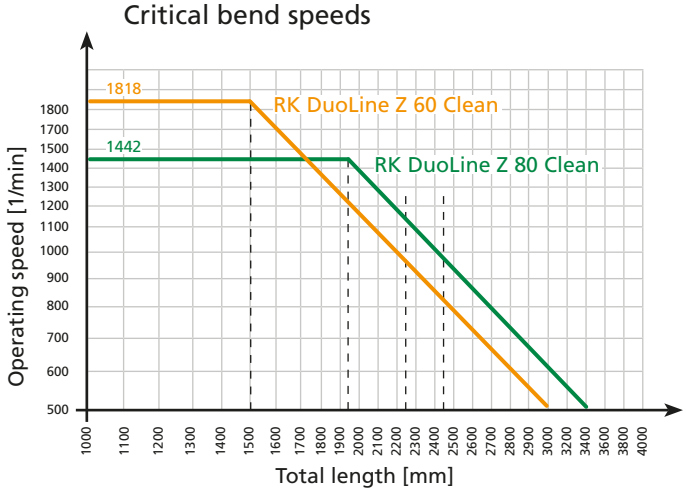


[mm]

| Code No. | Type | Basic length (minimum length) | Max. length (clearance) | Weight [kg] | |
|---|---|---|---|---|---|
| | | | | Basic length | per 100 mm travel |
| 92521740_ _ _ _ | Synchronising shaft RK DuoLine Z 60 Clean | 118 | 2985 | 1,0 | 0,24 |
| 92521750_ _ _ _ | Synchronising shaft RK DuoLine Z 80 Clean | 144 | 3400 | 1,96 | 0,29 |

## External inductive limit switch

- External fixation on the guide profilev

**Scope of delivery:**
Limit switch with set of fixing items

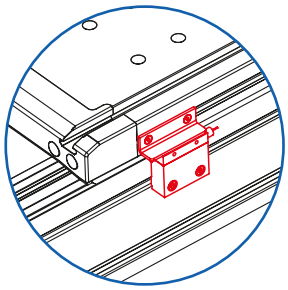

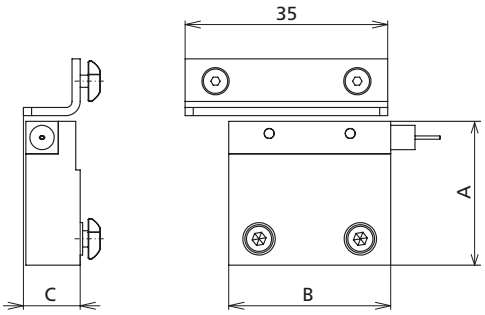


| Limit switch | external |
|---|---|
| Voltage | 10...30 VDC |
| Max. switching current | 100 mA |
| Operating frequency | max. 5 kHz |
| Mechanical lifetime | independent of operating cycles |
| Operating distance | 1,5 mm |
| Degree of protection | IP 67 |
| Cable length | 5 m |
| Ambient temperature | -25°C to +70°C |

| Code No. | Type | A | B | C | Version |
|---|---|---|---|---|---|
| 92839 | RK DuoLine 60 Clean | 52,8 | 25 | 10 | NO, Internal inductive limit switch |
| 92821 | RK DuoLine 80 Clean | 71,5 | 25 | 10 | |

# Roller guide actuators – SQ MT

## Timing-belt unit with fixed carriage, also for large travel

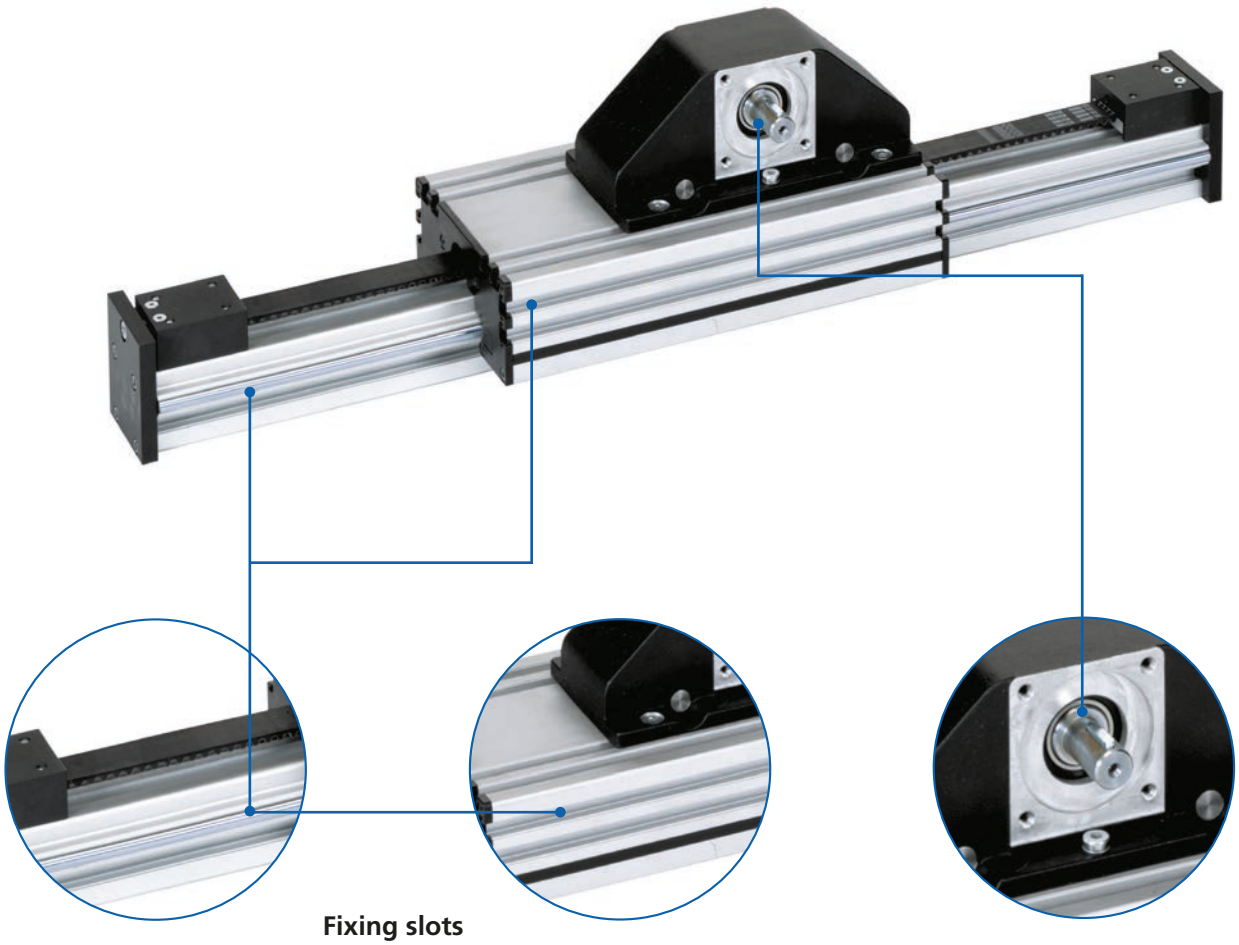

✓ Simple connection of the payload

**Fixing slots**

✓ Simple connection to the baseframe

**Drive shaft**

✓ Either at one end or both

### Features:

- Stroke lengths up to 18 m
- Travel speed up to 5 m/s
- Guide profile made from the BLOCAN® modular profile system
- Extruded carriage with fixing slots
- Guide block and drive move with carriage

### Options:

- Longer stroke lengths
- Second carriage, either non driven or driven separately
- Extended carriage

# Table of contents - SQ MT


## Properties/Technical data

- General information/operating conditions ... 426
- Timing-belt ... 426
- Load data ... 427

## Versions
(Dimensions, order numbers)

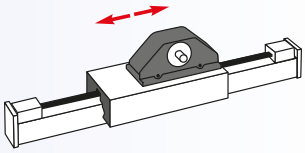

- SQ MT timing-belt unit ... 428 - 429

## Accessories

**Fixing**
- Slot stones ... 430

**Drive**
- Motor adaptor ... 432
- Coupling ... 433

**Position determination**
- Mechanical limit switch ... 434
- Inductive limit switch and holder ... 435

# SQ MT – Technical data

## General information/operating conditions

| | |
|---|---|
| Design | Aluminium profile, timing-belt drive, moving profile |
| Guide | Rollers, external |
| Installation position | Any position |
| Repeatability | ± 0.05 mm |
| Ambient temperature | 0°C to +60°C |
| Protection class | IP 20 |

## Timing-belt

| Type | Timing-belt | Pitch/width | Eff. diam. of lock washer [mm] | Max. moment via shaft [Nm] | Max. speed [m/s] | Max. acceleration [m/s$^2$] |
|---|---|---|---|---|---|---|
| SQ MT 30 | GT 5MR | 5/12 | 23.87 | 5 | 5 | 20 |
| SQ MT 40 | GT 5MR | 5/20 | 27.06 | 8.5 | 5 | |
| SQ MT 40 x 80 | GT 5MR | 5/20 | 27.06 | 8.5 | 5 | |
| SQ MT 50 | GT 5MR | 5/25 | 38.20 | 20 | 5 | |
| SQ MT 50 x 100 | GT 5MR | 5/25 | 38.20 | 20 | 5 | |
| SQ MT 60 | GT 8MR | 8/28 | 56.02 | 55 | 10 | |
| SQ MT 60 x 120 | GT 8MR | 8/28 | 56.02 | 55 | 10 | |
| SQ MT 80 | GT 8MR | 8/40 | 61.12 | 90 | 10 | |
| SQ MT 80 x 160 | GT 8MR | 8/40 | 61.12 | 90 | 10 | |

## No-load torque

[Nm]

| Type | SQ MT |
|---|---|
| 30 | 0.60 |
| 40 | 0.70 |
| 50 | 0.85 |
| 60 | 1.00 |
| 80 | 1.20 |

## Load data*

F Force [N]

M Moment [Nm]

I Geometric moment of inertia [$cm^4$]

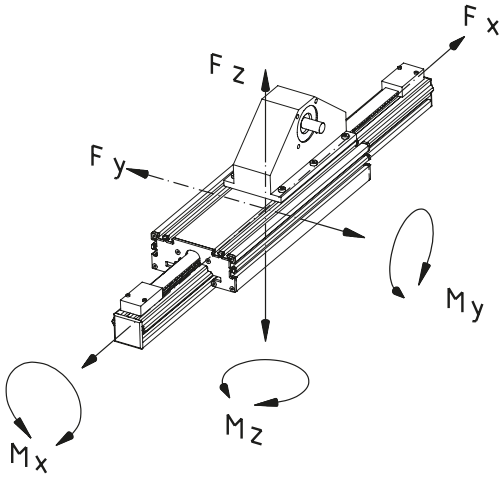


* With reference to carriage (static values, guide element resting on full surface)

| Type | Fx** | Fy | Fz | Mx | My | Mz |
|---|---|---|---|---|---|---|
| SQ MT 30 | 320 | 790 | 790 | 14 | 24 | 26 |
| SQ MT 40 | 610 | 1020 | 1020 | 23 | 40 | 40 |
| SQ MT 40 x 80 | 610 | 1020 | 1020 | 23 | 40 | 40 |
| SQ MT 50 | 1000 | 1020 | 1020 | 28 | 59 | 59 |
| SQ MT 50 x 100 | 1000 | 1020 | 1020 | 28 | 59 | 59 |
| SQ MT 60 | 1790 | 2550 | 2550 | 99 | 171 | 171 |
| SQ MT 60 x 120 | 1790 | 2550 | 2550 | 99 | 171 | 171 |
| SQ MT 80 | 2810 | 2550 | 2550 | 124 | 201 | 201 |
| SQ MT 80 x 160 | 2810 | 2550 | 2550 | 124 | 201 | 201 |

** Initial tension of the timing belt 0,8 x Fx

## Geometric moment of inertia

[$cm^4$]

| Type | Iy | Iz |
|---|---|---|
| SQ MT 30 | 3.4 | 3.4 |
| SQ MT 40 | 11.3 | 11.3 |
| SQ MT 40 x 80 | 19.4 | 76.0 |
| SQ MT 50 | 29.1 | 29.1 |
| SQ MT 50 x 100 | 43.9 | 180.8 |
| SQ MT 60 | 51.2 | 51.2 |
| SQ MT 60 x 120 | 94.7 | 372.3 |
| SQ MT 80 | 155.3 | 155.3 |
| SQ MT 80 x 160 | 292.4 | 1090 |

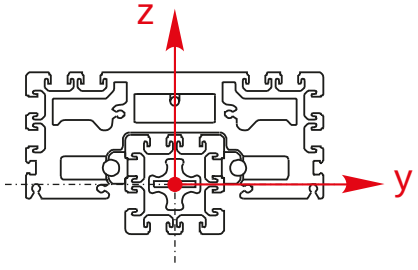

# SQ MT – Versions

**Order information:**

- Longer travel lengths on request
- Second non driven or separately driven carriage available on request
- Extended carriage available on request

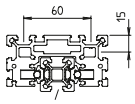

Profile S-30

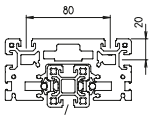

Profile S-40

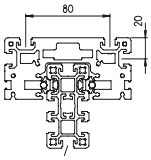

Profile S-40 x 80

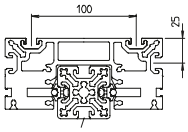

Profile F-50

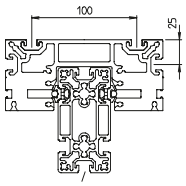

Profile F-50 x 100

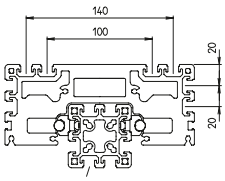

Profile F-60

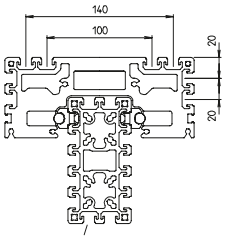

Profile F-60 x 120

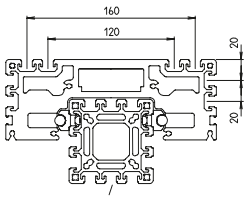

Profile F-80

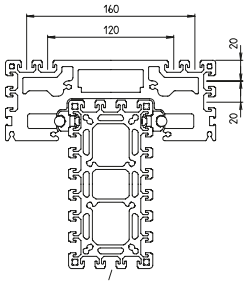

Profile F-80 x 160



| Code No. | Type | Timing-belt | Basic length | B1 | B2 | B3 | C | D1 | D2 | F | G1 | H1 | H2 |
|---|---|---|---|---|---|---|---|---|---|---|---|---|---|
| FEB3030 _ A | SQ MT 30 | 5M-12 | 278 | 91.2 | 75 | 38 | 50 | 10 | $22^{H7}$ | 4.5 | M4 | 83 | 107 |
| FEB4040 _ A | SQ MT 40 | 5M-20 | 352 | 120 | 100 | 48 | 65 | 10 | $28^{H7}$ | 6.5 | M5 | 104 | 132 |
| FEB4080 _ A | SQ MT 40 x 80 | 5M-20 | 352 | 120 | 100 | 48 | 105 | 10 | $28^{H7}$ | 46.5 | M5 | 144 | 172 |
| FEB5050 _ A | SQ MT 50 | 5M-25 | 377 | 150 | 120 | 58 | 78 | 14 | $35^{H7}$ | 9 | M6 | 119 | 155 |
| FEB5010 _ A | SQ MT 50 x 100 | 5M-25 | 377 | 150 | 120 | 58 | 128 | 14 | $35^{H7}$ | 59 | M6 | 169 | 205 |
| FFB6060 _ A | SQ MT 60 | 8M-28 | 524 | 180 | 120 | 80 | 98 | 20 | $70^{H7}$ | 21.5 | M8 | 157 | 198 |
| FFB6012 _ A | SQ MT 60 x 120 | 8M-28 | 524 | 180 | 120 | 80 | 158 | 20 | $70^{H7}$ | 81.5 | M8 | 217 | 258 |
| FFB8080 _ A | SQ MT 80 | 8M-40 | 554 | 200 | 140 | 100 | 118 | 25 | $70^{H7}$ | 41.5 | M8 | 177 | 218 |
| FFB8016 _ A | SQ MT 80 x 160 | 8M-40 | 554 | 200 | 140 | 100 | 198 | 25 | $70^{H7}$ | 121.5 | M8 | 257 | 298 |

_ _ _ _ Total length = basic length + travel [mm]

**Drive shafts:**
A = 1 shaft
B = 2 shafts

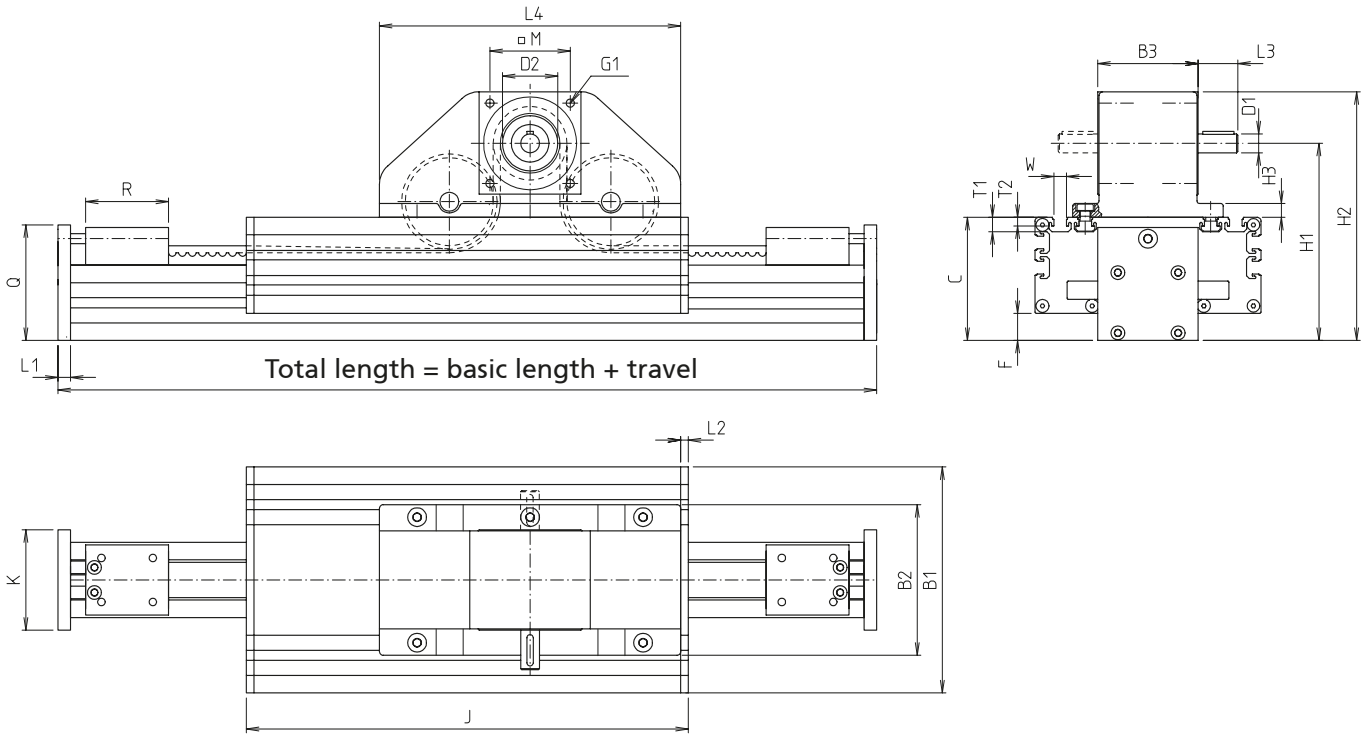


[mm]

| H3 | J | O | L1 | L2 | C | L4 | M | Q | R | T1 | T2 | W | Max. travel | Mass [kg] | |
|---|---|---|---|---|---|---|---|---|---|---|---|---|---|---|---|
| | | | | | | | | | | | | | | Basic length | per 100 mm travel |
| 7 | 181 | 40 | 8 | 6 | 25 | 120 | 21 | 47 | 35 | 8.5 | 4.5 | 10.1 | 3722 | 2.04 | 0.14 |
| 8 | 232 | 47 | 10 | 6 | 28 | 150 | 29 | 60 | 45 | 11.5 | 7 | 10.1 | 4648 | 4.51 | 0.23 |
| 8 | 232 | 47 | 10 | 6 | 28 | 150 | 29 | 100 | 45 | 11.5 | 7 | 10.1 | 4648 | 5.06 | 0.39 |
| 8.5 | 257 | 60 | 10 | 6 | 30 | 160 | 38 | 73 | 45 | 11.5 | 7 | 10.1 | 5623 | 6.75 | 0.41 |
| 8.5 | 257 | 60 | 10 | 6 | 30 | 160 | 38 | 123 | 45 | 11.5 | 7 | 10.1 | 5623 | 7.15 | 0.52 |
| 11 | 352 | 80 | 12 | 6 | 31.5 | 240 | 64 | 90 | 66 | 11.5 | 7 | 10.1 | 17476 | 13.63 | 0.45 |
| 11 | 352 | 80 | 12 | 6 | 31.5 | 240 | 64 | 150 | 66 | 11.5 | 7 | 10.1 | 17476 | 15.93 | 0.90 |
| 11 | 382 | 100 | 12 | 6 | 31.5 | 240 | 64 | 115 | 66 | 11.5 | 7 | 10.1 | 17446 | 17.50 | 0.79 |
| 11 | 382 | 100 | 12 | 6 | 31.5 | 240 | 64 | 195 | 66 | 11.5 | 7 | 10.1 | 17446 | 20.41 | 1.34 |

# SQ MT – Fixing

**Order instruction:**

- **Purchase only in lot sizes and a multiple of that, see product table below**

- Slot stones can be inserted and positioned at the guide profile and carriage

**Material:** galvanised steel

## Slot stones

**Slot stone -N-**



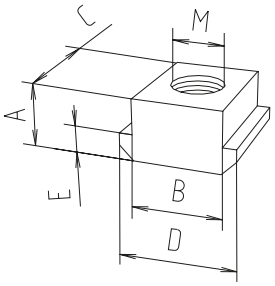


**Slot stone -N-**
can be slid into the slot

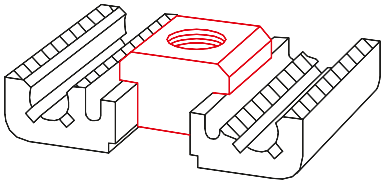

**Slot stone -K-**



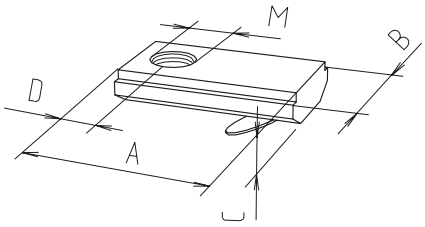


**Slot stone -K-**
can be swivelled into the slot

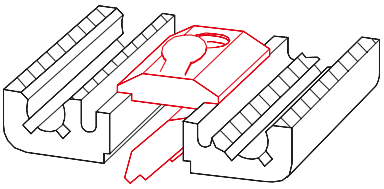

[mm] 


| Code No. | Type | lot sizes | Version | A | B | C | D | E | M | F [N] |
|---|---|---|---|---|---|---|---|---|---|---|
| **Slot stone -N-** | | | | | | | | | | |
| 4006201 | SQ MT 30 | 10, 20, 30... pcs | M5 | 5 | 10 | 13 | 13 | 3 | M5 | 4000 |
| 4006203 | SQ MT 30 | 10, 20, 30... pcs | M6 | 5 | 10 | 13 | 13 | 3 | M6 | 4000 |
| 4006202 | SQ MT 30 | 10, 20, 30... pcs | M8 | 5 | 10 | 13 | 13 | 3 | M8 | 4000 |
| 4026207 | SQ MT 40-80 | 10, 20, 30... pcs | M5 | 8 | 10 | 13 | 15 | 4 | M5 | 4000 |
| 4026203 | SQ MT 40-80 | 10, 20, 30... pcs | M6 | 8 | 10 | 13 | 15 | 4 | M6 | 9000 |
| 4026206 | SQ MT 40-80 | 10, 20, 30... pcs | M8 | 8 | 10 | 13 | 15 | 4 | M8 | 9000 |
| **Slot stone -K-** | | | | | | | | | | |
| 4006211 | all | 10, 20, 30... pcs | M5 | 21 | 12 | 4 | 7 | – | M5 | 5000 |
| 4006212 | all | 10, 20, 30... pcs | M6 | 21 | 12 | 4 | 7 | – | M6 | 5000 |
| 4006213 | all | 10, 20, 30... pcs | M8 | 21 | 12 | 4 | 7 | – | M8 | 5000 |
| 4016212 | SQ MT 40-80 | 10, 20, 30... pcs | M6 | 21 | 14 | 4 | 7 | – | M6 | 5000 |
| 4016213 | SQ MT 40-80 | 10, 20, 30... pcs | M8 | 21 | 14 | 4 | 7 | – | M8 | 8000 |

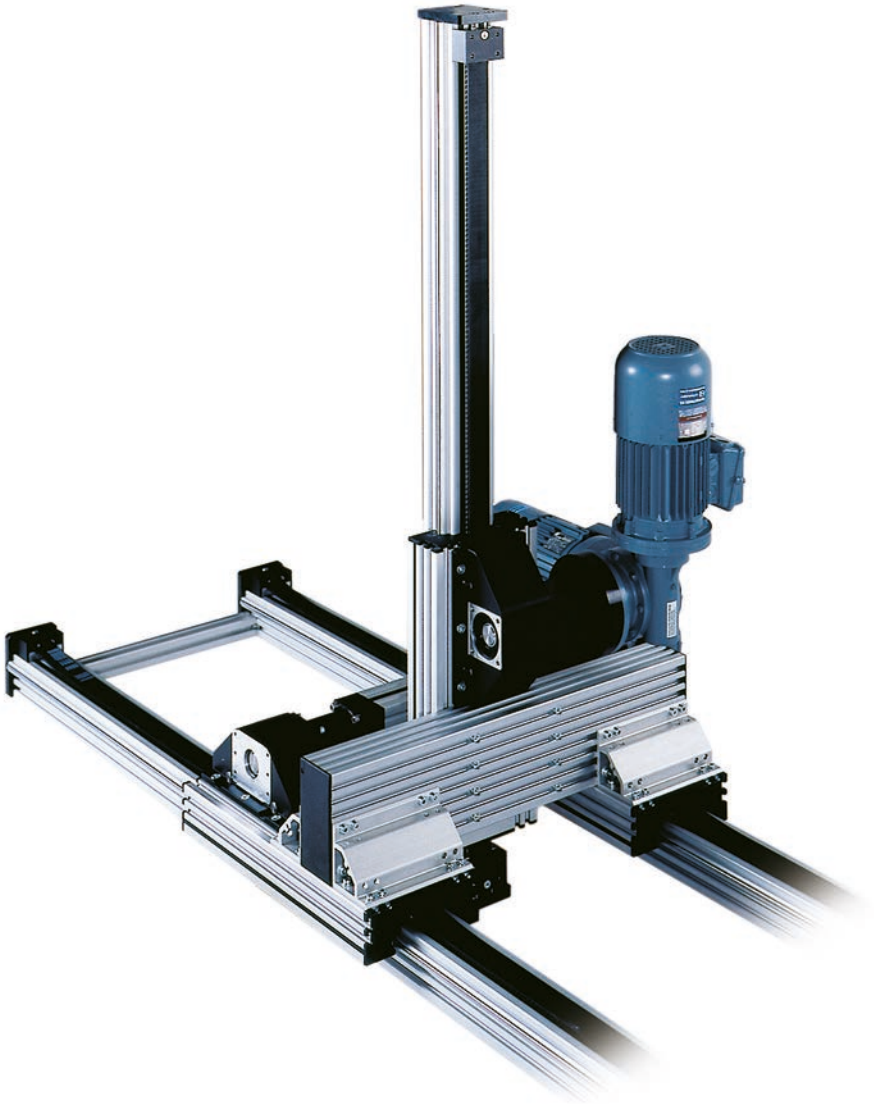

## Selection table - motor adaptor/coupling

- Simple assembly
- Exact fit due to centring shoulders

**Material:** AlMgSi, black anodised

| Type | Servomotor without gear | | | Three-phase motor | |
|---|---|---|---|---|---|
| | RK-AC 118 | RK-AC 240 | RK-AC 470 | 90/120W | 180/250 W |
| 30 | 949910 | – | – | 949913 | 949949 |
| | 911430 1011 | – | – | 910920 1012 | 911430 1014 |
| 40 40x80 | 949915 | 949917 | – | 949920 | 949921 |
| | 911430 1011 | 911430 1014 | – | 911430 1012 | 911430 1014 |
| 50 50x100 | 949922 | 949924 | – | 949928 | 949929 |
| | 911430 1114 | 911430 1414 | – | 911430 1214 | 911430 1414 |
| 60 60x120 | 949930 | 949932 | 949934 | 949938 | 949939 |
| | 911940 1120 | 911940 1420 | 911940 1920 | 911940 1220 | 911940 1420 |
| 80 80x160 | – | 949940 | 949942 | 949944 | 949945 |
| | – | 912855 1425 | 912855 1925 | 912855 1225 | 912855 2025 |

**Note:** For further details on motor versions, please refer to the chapter “Motors and controls”

## Motor adaptor

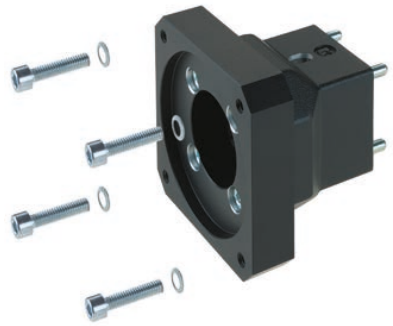

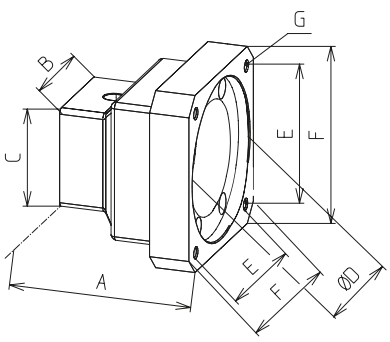


| Code No. | Type | A | B | C | D | E | F | G |
|---|---|---|---|---|---|---|---|---|
| 949910 | 30 | 63 | 40 | 40 | 60 | 53 | 70 | M5 |
| 949913 | 30 | 65 | 40 | 40 | 50 | 65 | 80 | M5 |
| 949949 | 30 | 70 | 40 | 40 | 80 | 100 | Ø120 | Ø6,6 |
| 949915 | 40 | 65 | 50 | 50 | 60 | 53 | 70 | M5 |
| 949917 | 40 | 73 | 50 | 50 | 80 | 70,7 | 90 | M6 |
| 949920 | 40 | 73 | 50 | 50 | 50 | 65 | 80 | M5 |
| 949921 | 40 | 73 | 50 | 50 | 80 | 100 | Ø120 | Ø6,6 |
| 949922 | 50 | 66 | 52 | 52 | 60 | 53 | 70 | M5 |
| 949924 | 50 | 73 | 52 | 52 | 80 | 70,7 | 90 | M6 |
| 949928 | 50 | 73 | 52 | 52 | 50 | 65 | 80 | M5 |
| 949929 | 50 | 75 | 52 | 52 | 80 | 100 | Ø120 | Ø6,6 |
| 949930 | 60 | 74 | 80 | 80 | 60 | 53 | 70 | M5 |
| 949932 | 60 | 79 | 80 | 80 | 80 | 70,7 | 90 | M6 |
| 949934 | 60 | 89 | 80 | 80 | 95 | 81,3 | 115 | M8 |
| 949938 | 60 | 79 | 80 | 80 | 50 | 65 | 80 | M5 |
| 949939 | 60 | 81 | 80 | 80 | 80 | 100 | Ø120 | Ø6,6 |
| 949940 | 80 | 86 | 80 | 80 | 80 | 70,7 | 90 | M6 |
| 949942 | 80 | 96 | 80 | 80 | 95 | 81,3 | 115 | M8 |
| 949944 | 80 | 86 | 80 | 80 | 50 | 65 | 80 | M5 |
| 949945 | 80 | 86 | 80 | 80 | 80 | 100 | Ø120 | Ø6,6 |

## Coupling

- Shaft connection without backlash
- Easy plug-in assembly

**Material:** Hub, aluminium
Gear ring, polyurethane



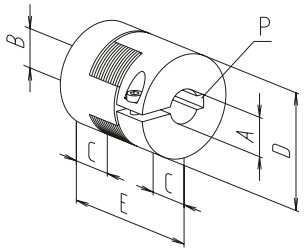


[mm]

| Code No. | A | B | C | D | E | P | Torque [Nm] with feather key | Torque [Nm] without feather key |
|---|---|---|---|---|---|---|---|---|
| 9109209510 | 9,5 | 10 | 10 | 20 | 30 | – / 3x3 | 5 | 3 |
| 9109201012 | 10 | 12 | 10 | 22 | 30 | 3x3 / 4x4 | 5 | 3 |
| 9114309514 | 9,5 | 14 | 11 | 30 | 35 | – / 5x5 | 12 | 6 |
| 9114301011 | 10 | 11 | 11 | 30 | 35 | 3x3 / 4x4 | 12 | 6 |
| 9114301012 | 10 | 12 | 11 | 30 | 35 | 3x3 / 4x4 | 12 | 6 |
| 9114301014 | 10 | 14 | 11 | 30 | 35 | 3x3 / 5x5 | 12 | 6 |
| 9114301114 | 11 | 14 | 11 | 30 | 35 | 4x4 / 5x5 | 12 | 6 |
| 9114301214 | 12 | 14 | 11 | 30 | 35 | 4x4 / 5x5 | 12 | 6 |
| 9114301414 | 14 | 14 | 11 | 30 | 35 | 5x5 / 5x5 | 12 | 6 |
| 9114301420 | 14 | 20 | 11 | 30 | 35 | 5x5 / 6x6 | 12 | 6 |
| 9119409520 | 9,5 | 20 | 25 | 40 | 65 | – / 6x6 | 17 | 10 |
| 9119401120 | 11 | 20 | 25 | 40 | 65 | 4x4 / 6x6 | 17 | 10 |
| 9119401220 | 12 | 20 | 25 | 40 | 65 | 4x4 / 6x6 | 17 | 10 |
| 9119401920 | 19 | 20 | 25 | 40 | 65 | 6x6 / 6x6 | 17 | 10 |
| 9128559525 | 9,5 | 25 | 25 | 40 | 65 | – / 8x7 | 17 | 10 |
| 9128551225 | 12 | 25 | 25 | 40 | 65 | 4x4 / 8x7 | 17 | 10 |
| 9128551425 | 14 | 25 | 30 | 55 | 78 | 5x5 / 8x7 | 60 | 35 |
| 9128551925 | 19 | 25 | 30 | 55 | 78 | 6x6 / 8x7 | 60 | 35 |

## Mechanical limit switch

- Limit switch with angle lever
- Compact design

**Material:**
Thermoplastic, fully insulated



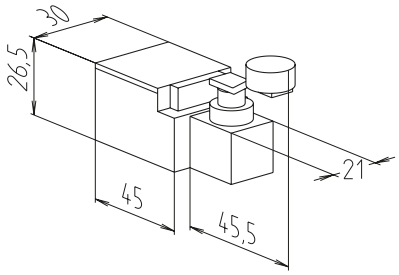


| | |
|---|---|
| Max. voltage | 250 V AC |
| Max. switching current | 6 A |
| Max. starting current | 16 A |
| Operating cycles | Max. 6,000/h |
| Mechanical lifetime | 1 x $10^7$ switching cycles |
| Axis lever adjustment | locking by 360° |
| Protection class | IP 65 |
| Ambient temperature | -30°C to +80°C |

| Code No. | Switching function |
|---|---|
| 91905 | NC/NO |

## Holder for inductive limit switch

- Fixing bracket for limit switches
- Fixing in the profile slot of the guide profile
- Simple axial displacement and adjustment of holder is possible

**Material:**
AlMgSi, vibratory finished

**Scope of delivery:**
Holder with fastenings

A limit switch is not included!

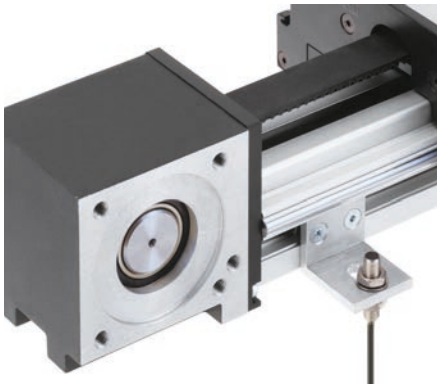

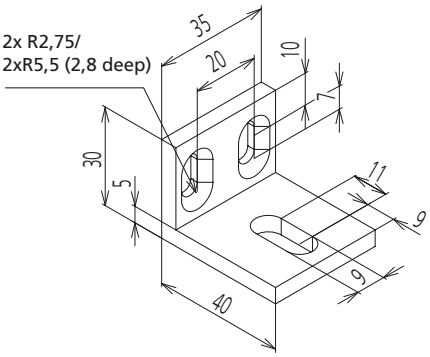


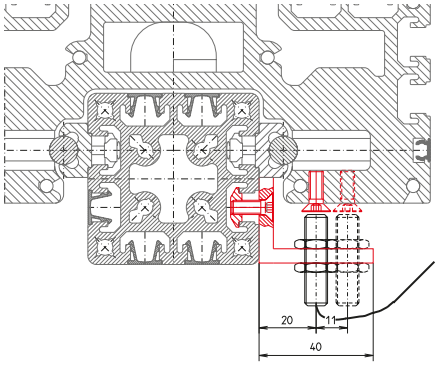


| Code No. | Type |
|---|---|
| 92909 | SQ MT 40 x 80, 60, 60 x 120, 80, 80 x 160 |

## Inductive limit switch

- Function indicator (LED)
- Maintenance-free

**Material:** Housing: stainless steel



| Type | 60-80 |
|---|---|
| Voltage | 10 - 30 V DC |
| Max. switching current | 150 mA |
| Operating distance | 2 mm for steel |
| Protection class | IP 67 |
| Ambient temperature | -25°C to +70°C |
| Cable lengths | 2m |

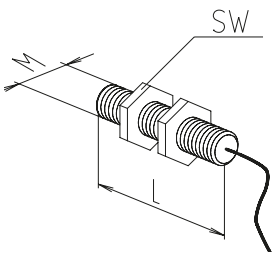


[mm]

| Code No. | Switching function | L | M | Wrench size (SW) |
|---|---|---|---|---|
| 92826 | Changeover | 40 | 8x1 | 13 |

# Roller guide actuators – SQ ZST

## Rack and pinion with fixed carriage, also for larger travels up to 30 m

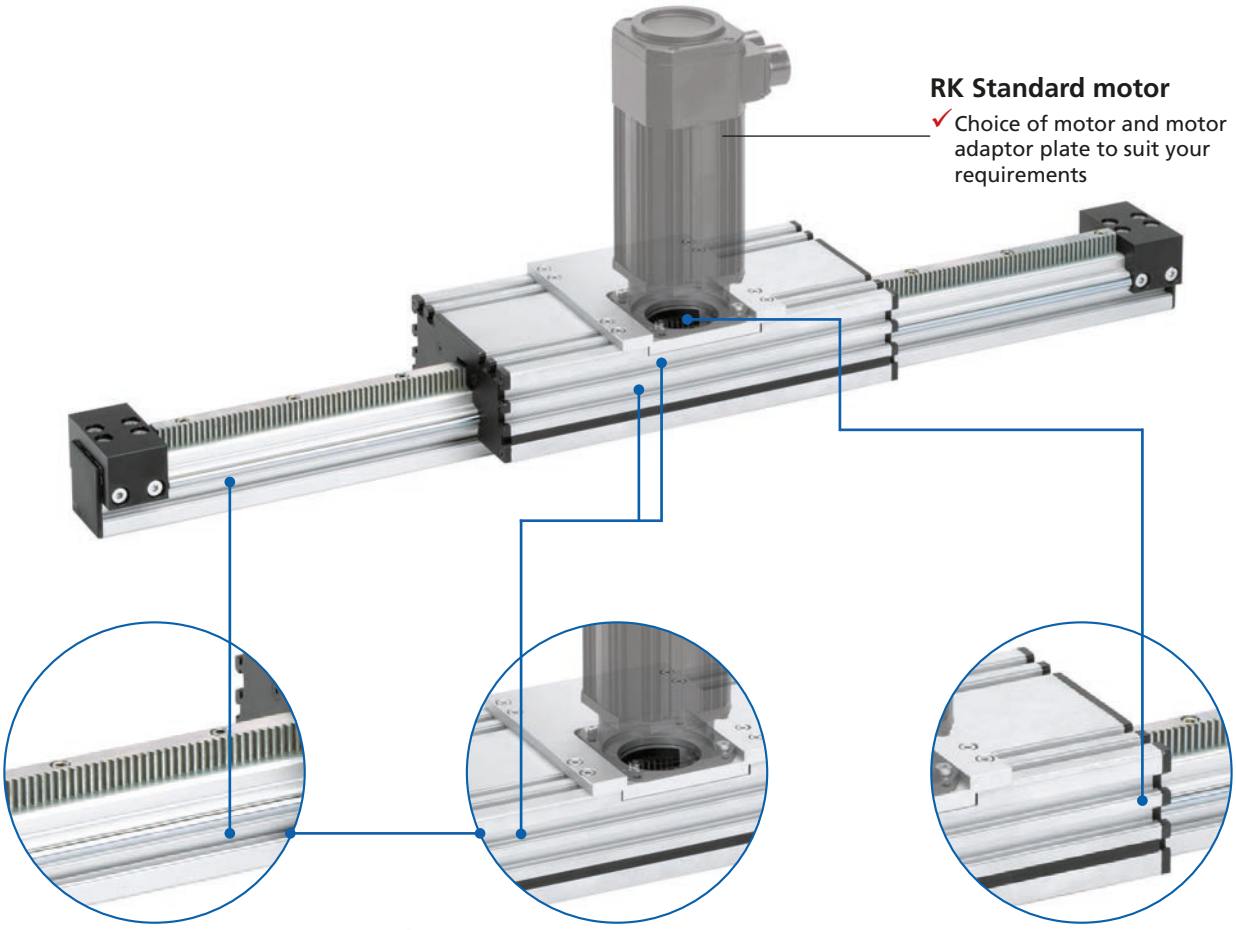

**RK Standard motor**

✓ Choice of motor and motor adaptor plate to suit your requirements

**Fixing slots**

✓ Simple connection of the rated load

✓ Simple connection to the baseframe

**Carriage with spur gear**

✓ A spur gear transmits the motion of rotation directly onto the carriage

✓ In the carriage, an oil-soaked, free-running felt wheel lubricates the rack

### Features:

- Linear power transmission via rack and spur gear
- Designed specially for large strokes of up to 30 m and more
- High positioning accuracy, even with large stroke lengths
- Travel speed up to 5 m/s
- Guide profile made from the BLOCAN® modular profile system
- Rack lubrication via felt wheel
- Suitable for RK standard motors

### Options:

- Second non driven carriage
- Longer stroke lengths
- Additional independently driven carriages

# SQ ZST - Table of contents


## Properties/Technical data

- General information/operating conditions ... 438
- Load data ... 439

## Versions
(Dimensions, order numbers)

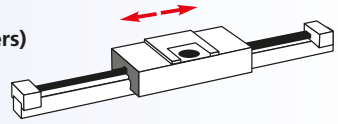

- SQ ZST rack unit ... 440 - 441

## Accessories

**Fixing**

- Slot stones ... 442

**Position determination**

- Mechanical limit switch ... 443
- Inductive limit switch and holder ... 443

# SQ ZST – Technical data

## General information/operating conditions

| | |
|---|---|
| **Design** | Aluminium profile, rack drive, moving profile |
| **Guide** | Rollers, external |
| **Installation position** | Any position |
| **Repeatability** | ± 0.05 mm |
| **Max. travel speed** | 5 m/s |
| **Ambient temperature** | 0°C to +60°C |
| **Protection class** | IP 20 |

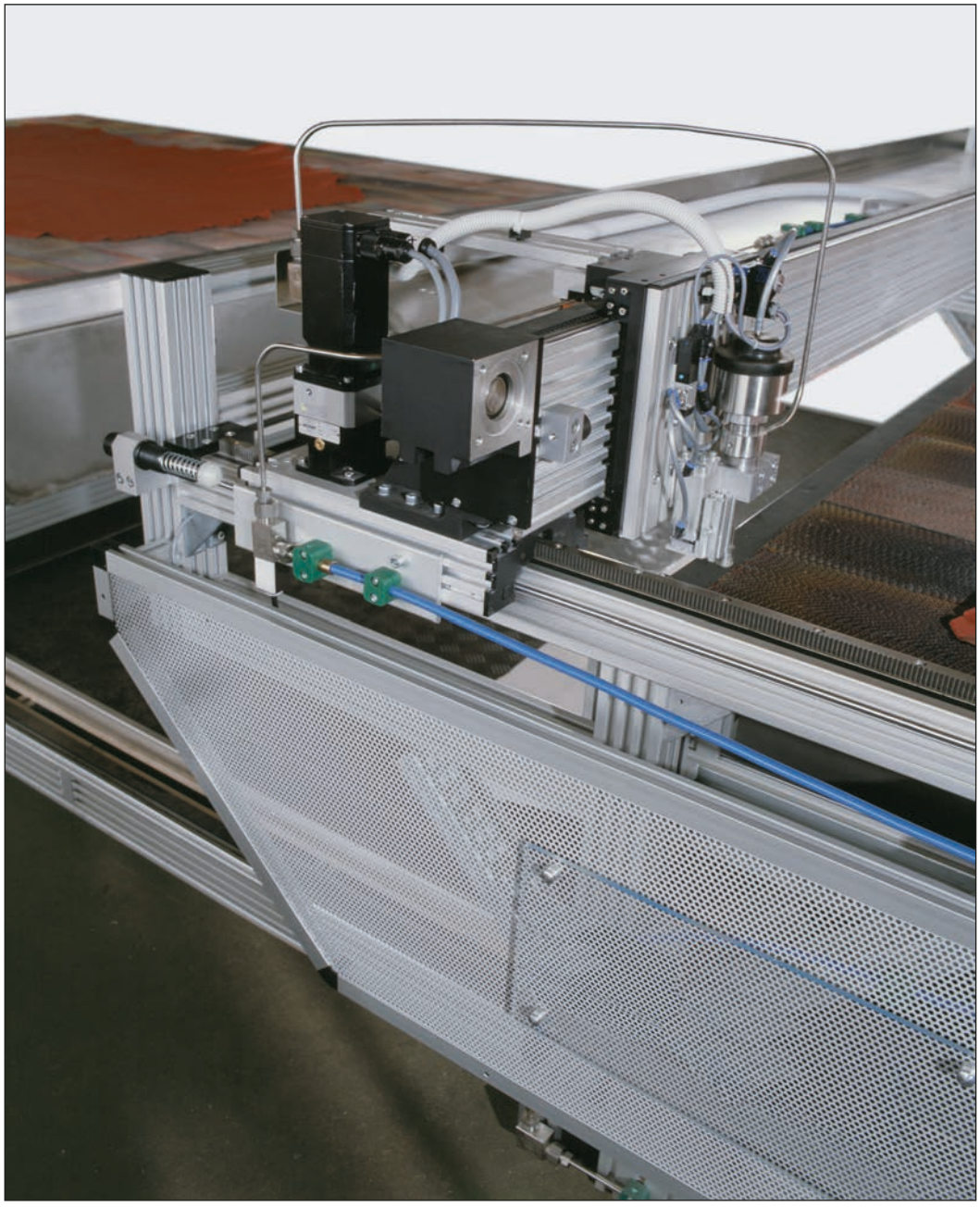

3-axis plotter, X-axis moves via an SQ ZST rack unit

## Load data*

F Force [N]

M Moment [Nm]

I Geometric moment of inertia [$cm^4$]

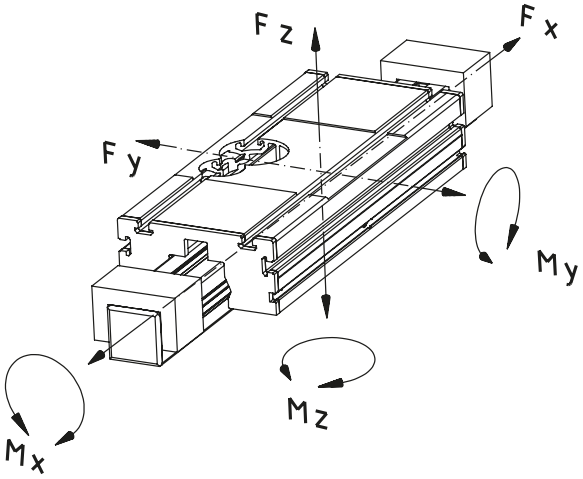


* With reference to carriage (static values, guide element resting on full surface)

| Type | Fx | Fy | Fz | Mx | My | Mz |
|---|---|---|---|---|---|---|
| SQ ZST 60 | 1132 | 2550 | 2550 | 99 | 171 | 171 |
| SQ ZST 60 x 120 | | 2550 | 2550 | 99 | 171 | 171 |
| SQ ZST 80 | | 2550 | 2550 | 124 | 201 | 201 |
| SQ ZST 80 x 160 | | 2550 | 2550 | 124 | 201 | 201 |

## Geometric moment of inertia

[$cm^4$]

| Type | Iy | Iz |
|---|---|---|
| SQ ZST 60 | 51.2 | 51.2 |
| SQ ZST 60 x 120 | 94.7 | 372.3 |
| SQ ZST 80 | 155.3 | 155.3 |
| SQ ZST 80 x 160 | 292.4 | 1090 |

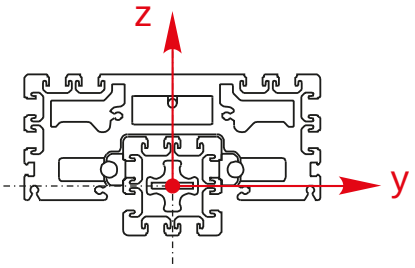

# SQ ZST – Versions

**Order information:**

- Longer travel lengths on request
- Second non driven or independently driven carriage available on request

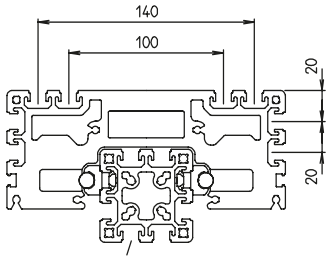


Profile F-60

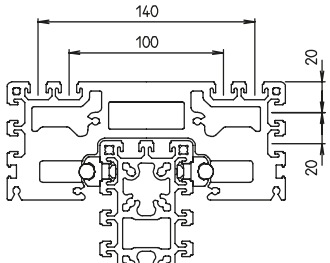


Profile F-60 x 120

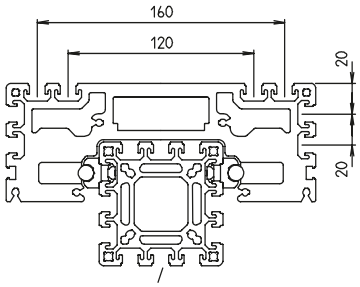


Profile F-80

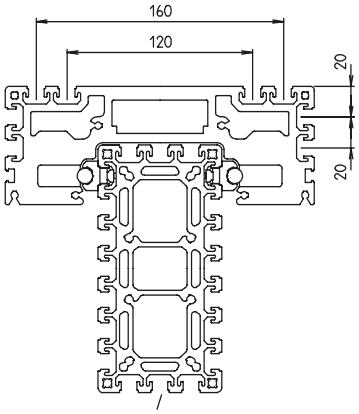


Profile F-80 x 160

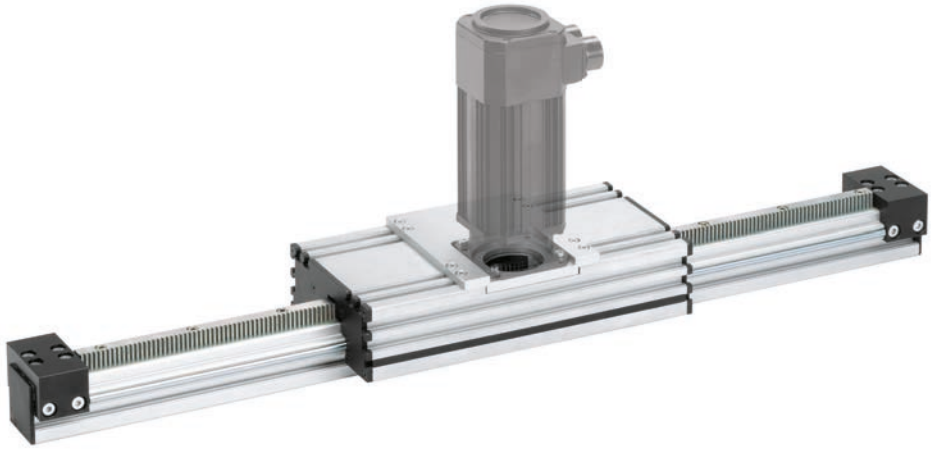

| Code No. | Type | Basic length | B1 | B2 | C | F | H | J | K1 | K2 | L1 |
|---|---|---|---|---|---|---|---|---|---|---|---|
| FGA6060 _ A | SQ ZST 60 | 470 | 180 | depending on engine | 98 | 21.5 | 150 | 362 | 60 | 90 | 4 |
| FGA6012 _ A | SQ ZST 60 x 120 | 470 | 180 | | 158 | 81.5 | 150 | 362 | 60 | 90 | 4 |
| FGA8080 _ A | SQ ZST 80 | 470 | 200 | | 118 | 41.5 | 150 | 362 | 80 | 110 | 4 |
| FGA8016 _ A | SQ ZST 80 x 160 | 470 | 200 | | 198 | 121.5 | 150 | 362 | 80 | 110 | 4 |

_ _ _ _ Total length = basic length + travel [mm]

**For motor (see chapter "Motors and controls"):**

C = RK-AC 240
D = RK-AC 240 with gear unit
E = RK-AC 470
F = RK-AC 470 with gear unitl
I = 3-phase motor 90 W
K = 3-phase motor 120W
L = 3-phase motor 180W
M = 3-phase motor 250W

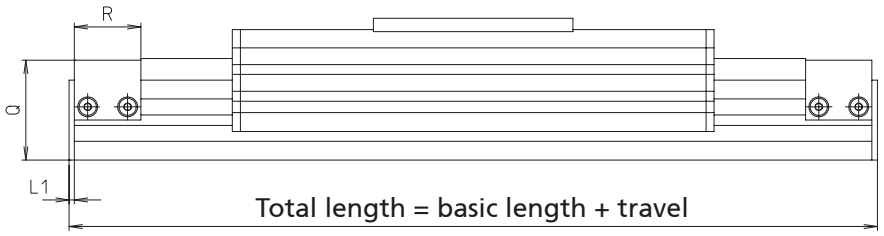


Optional motor
(see chapter "Motors and controls")

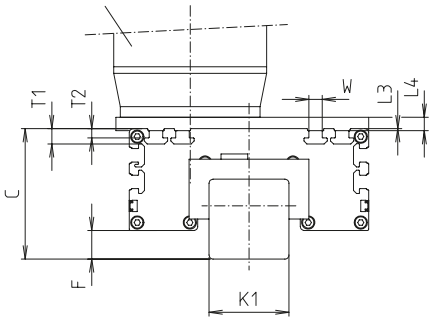


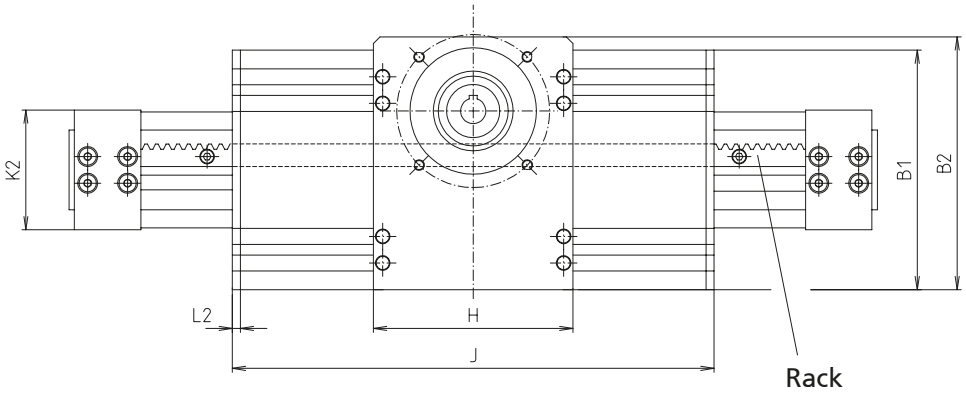


[mm]

| L2 | C | L4 | Q | R | T1 | T2 | W | Max. travel | Mass [kg] | |
|---|---|---|---|---|---|---|---|---|---|---|
| | | | | | | | | | Basic length | per 100 mm travel |
| 6 | 1.5 | depending on engine | 75 | 50 | 11.5 | 7 | 10.1 | 29530 | 11.77 | 0.81 |
| 6 | 1.5 | | 135 | 50 | 11.5 | 7 | 10.1 | 29530 | 13.88 | 1.26 |
| 6 | 1.5 | | 95 | 50 | 11.5 | 7 | 10.1 | 29530 | 12.78 | 1.14 |
| 6 | 1.5 | | 175 | 50 | 11.5 | 7 | 10.1 | 29530 | 14.28 | 1.34 |

# SQ ZST – Fixing

**Order instruction:**

- **Purchase only in lot sizes and a multiple of that, see product table below**

- Slot stones can be inserted and positioned at the guide profile and carriage

**Material:** galvanised steel

## Slot stones

**Slot stone -N-**



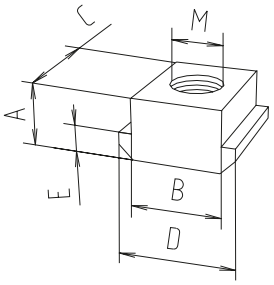


**Slot stone -N-**
can be slid into the slot

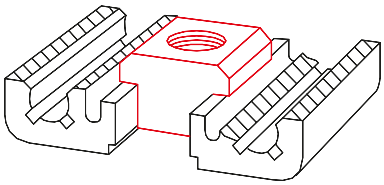

**Slot stone -K-**



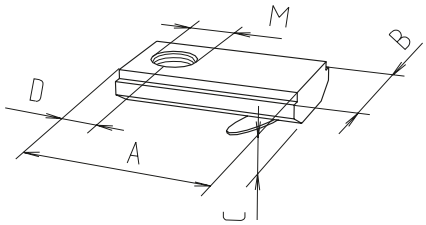


**Slot stone -K-**
can be swivelled into the slot

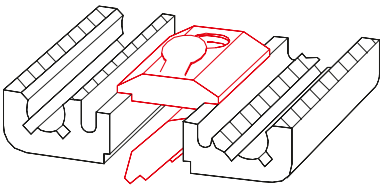

[mm] 


| Code No. | Version | lot sizes | A | B | C | D | E | M | F [N] |
|---|---|---|---|---|---|---|---|---|---|
| **Slot stone -N-** | | | | | | | | | |
| 4026207 | M5 | 10, 20, 30... pcs | 8 | 10 | 13 | 15 | 4 | M5 | 4000 |
| 4026203 | M6 | 10, 20, 30... pcs | 8 | 10 | 13 | 15 | 4 | M6 | 9000 |
| 4026206 | M8 | 10, 20, 30... pcs | 8 | 10 | 13 | 15 | 4 | M8 | 9000 |
| **Slot stone -K-** | | | | | | | | | |
| 4006211 | M5 | 10, 20, 30... pcs | 21 | 12 | 4 | 7 | – | M5 | 5000 |
| 4006212 | M6 | 10, 20, 30... pcs | 21 | 12 | 4 | 7 | – | M6 | 5000 |
| 4006213 | M8 | 10, 20, 30... pcs | 21 | 12 | 4 | 7 | – | M8 | 5000 |
| 4016212 | M6 | 10, 20, 30... pcs | 21 | 14 | 4 | 7 | – | M6 | 5000 |
| 4016213 | M8 | 10, 20, 30... pcs | 21 | 14 | 4 | 7 | – | M8 | 8000 |

## Mechanical limit switch



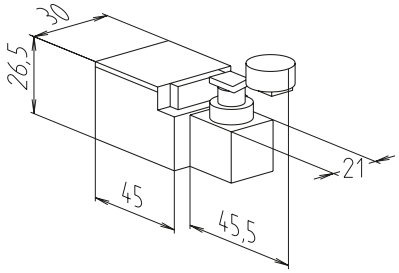


- Limit switch with angle lever
- Compact design

**Material:**
Thermoplastic, fully insulated

| | |
|---|---|
| Max. voltage | 250 V AC |
| Max. switching current | 6 A |
| Max. starting current | 16 A |
| Operating cycles | Max. 6,000/h |
| Mechanical lifetime | 1 x $10^7$ switching cycles |
| Axis lever adjustment | locking by 360° |
| Protection class | IP 65 |
| Ambient temperature | -30°C to +80°C |

| Code No. | Switching function |
|---|---|
| 91905 | NC/NO |

## Inductive limit switch



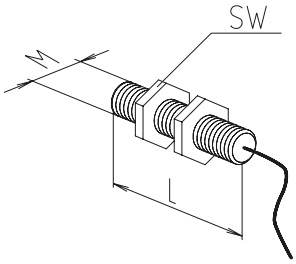


- Function indicator (LED)
- Maintenance-free

**Material:** Housing: stainless steel

| Type | 60-80 |
|---|---|
| Voltage | 10 - 30 V DC |
| Max. switching current | 150 mA |
| Operating distance | 2 mm for steel |
| Protection class | IP67 |
| Ambient temperature | -25°C to +70°C |
| Cable lengths | 2m |

[mm]

| Code No. | Switching function | L | M | Wrench size (SW) |
|---|---|---|---|---|
| 92826 | Changeover | 40 | 8x1 | 13 |

## Holder for inductive limit switch

- Fixing bracket for proximity switches
- Fixing in the profile slot of the guide profile
- Simple axial displacement and adjustment of holder is possible

**Material:**
AlMgSi, vibratory finished

**Scope of delivery:**
Holder with fastenings

A proximity switch is not included!

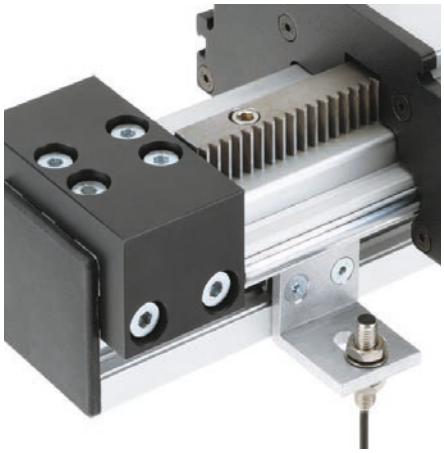

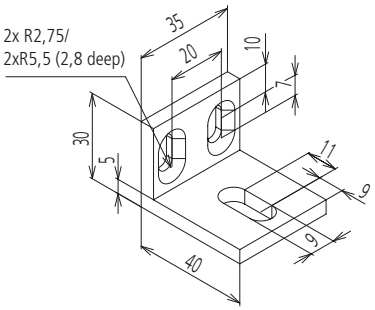


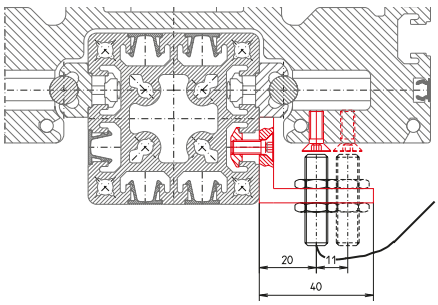


| Code No. | Type |
|---|---|
| 92909 | SQ ZST 60, 60 x 120, 80, 80 x 160 |

# Control-Tec

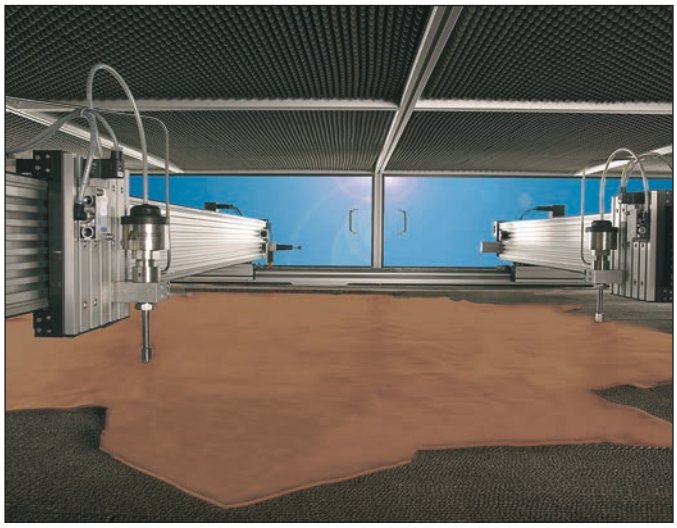

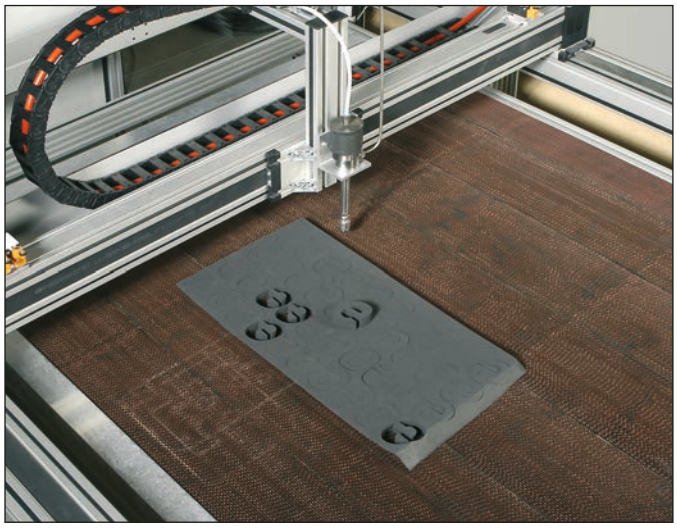

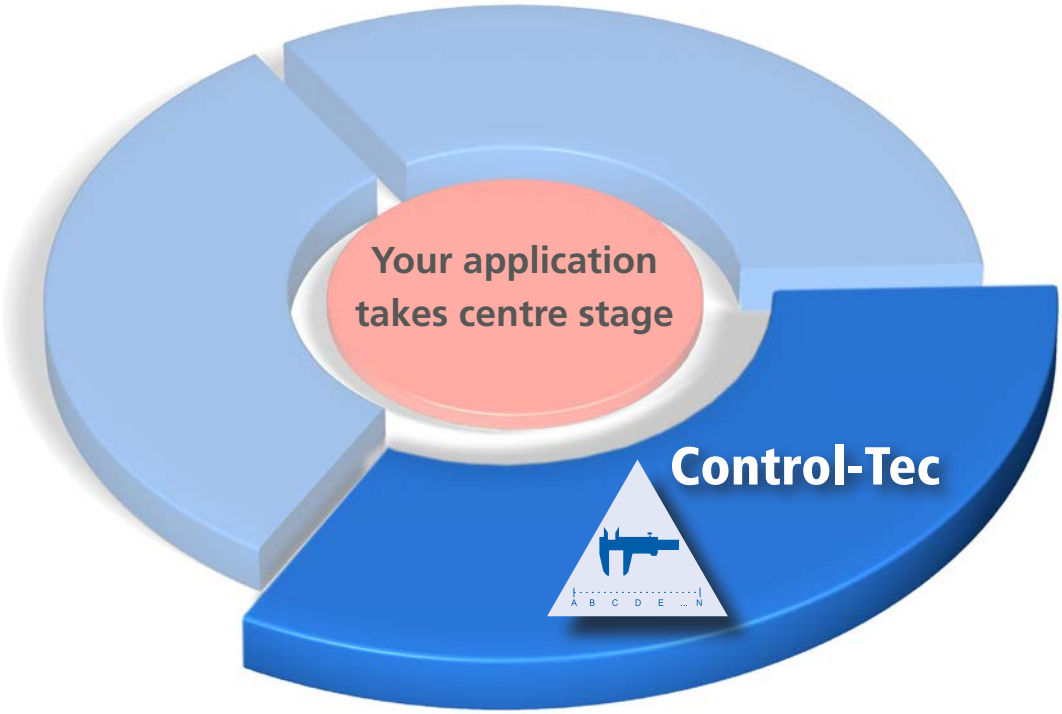


**Features:**

- ✓ High positioning accuracy
- ✓ Uniform motion
- ✓ High drive stiffness
- ✓ 3 shift operation
- ✓ IP 40 protection class

RK ROSE+KRIEGER

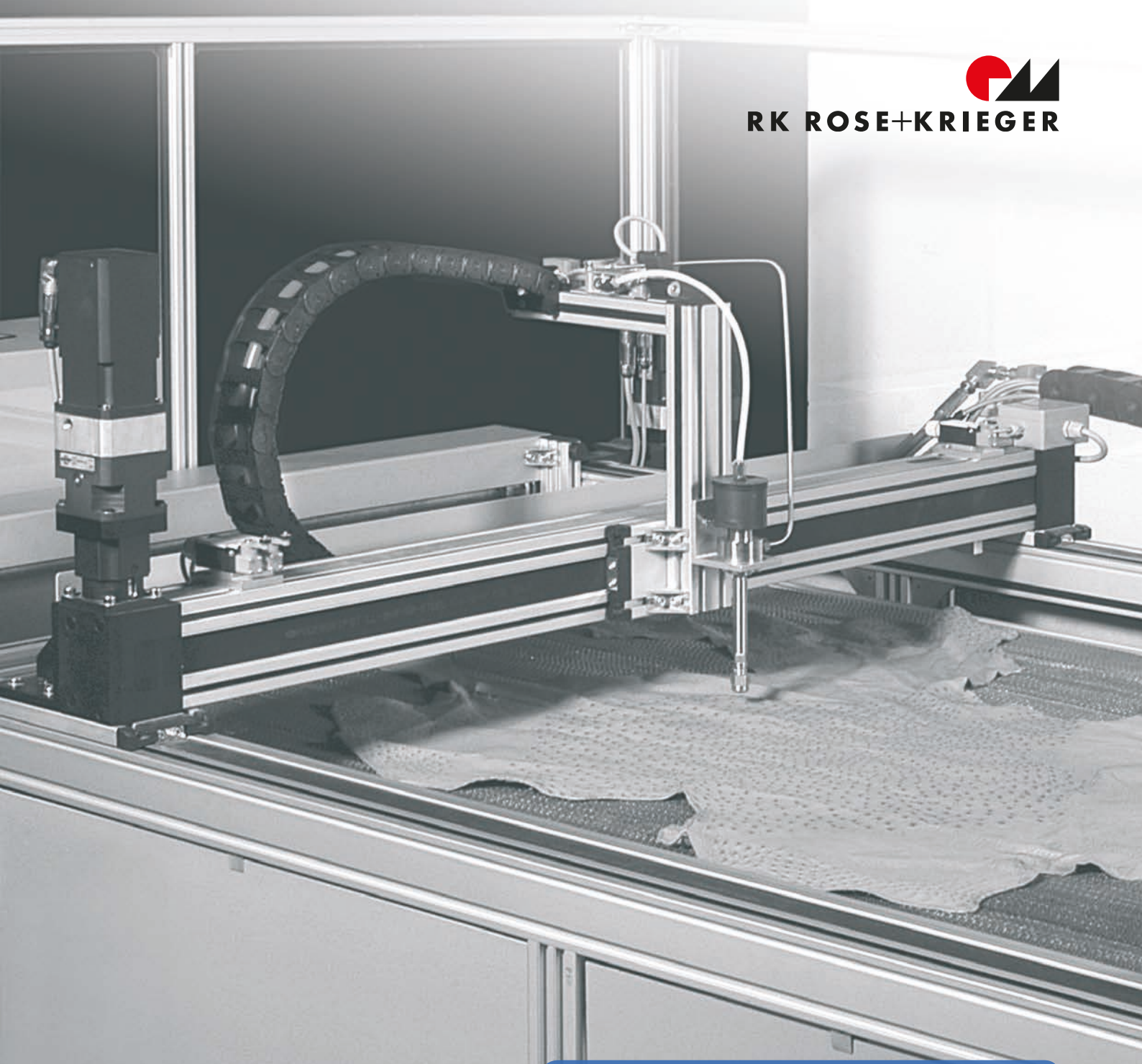

## Numerically controlled positioning applications


Rodless style ..... Page 430

Rodstyle ..... Page 488


# Control-Tec

## Rodless style | Drive + Guide

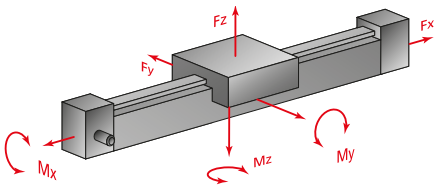


Length/Strokes [mm]
Forces [N]
Moments [Nm]

### Linear actuator





| | RK DuoLine S<br>page 430 |
|---|---|
| Max. travel | 2268-4400 mm |
| Fx max. | 1400-8000 N |
| Fy max. | 930-7000 N |
| Fz max. | 1100-8000 N |
| Mx max. | 45-500 Nm |
| My max. | 65-600 Nm |
| Mz max. | 56-500 Nm |
| V max. | 2 m/s |
| a max. | 20 m/s$^2$ |
| Repeat accuracy | ± 0.04 mm |
| Pitch accuracy | T5 (± 0,023 / 300 mm) |
| Right-hand thread | Yes |
| Split screw | on request |
| Features | ✓Optimum performance, precision and features |

## Rodstyle | Drive

### E-cylinder






| | LZ 70 FL/PL E-cylinder page 488 | LZ 80 FL/PL E-cylinder page 488 | SLZ 90 E-cylinder page 504 |
|---|---|---|---|
| Max. travel | 1000 mm | 1005 mm | 2000 mm |
| Fx max. | 5.000 N | 6.200 N | 25000 N |
| V max. | 1000 mm/s | 288 mm/s | 1 m/s |
| Positioning accuracy | ± 0,05 mm | ± 0,05 mm | ± 0,1 mm |
| Features | ✓The new generation of industrial linear cylinders using linear technology | | ✓The powerful linear cylinder for precise positioning tasks up to 25,000 N |

# RK DuoLine S – Key features / technical benefits

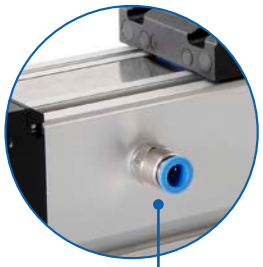

**Connection**
- ✓ For sealing air or vacuum available on request

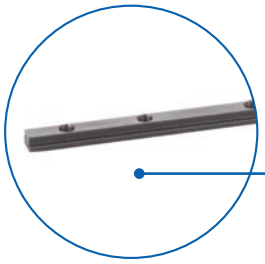

**Slot stone strip**
- ✓ To hold your load securely

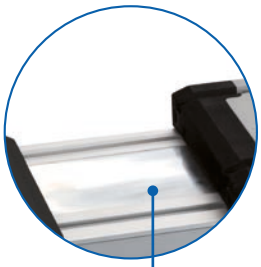

**Cover strip**
- ✓ Degree of protection mode IP40

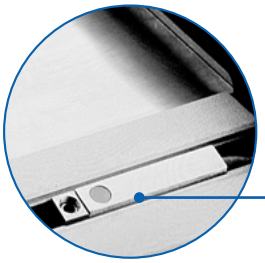

**Proximity switch**
- ✓ Simple installation without protruding contours
- ✓ Up to 3 sensors per slot
- ✓ Can be installed and changed subsequently

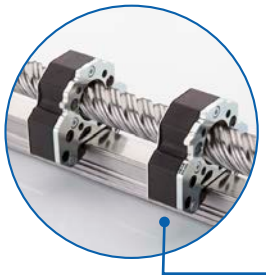

**Anti-vibration screw support**
- ✓ Maximum speed and dynamics regardless of length
- ✓ Maintenance- and wear-free
- ✓ Up to 8x
- ✓ Reduced vibrations

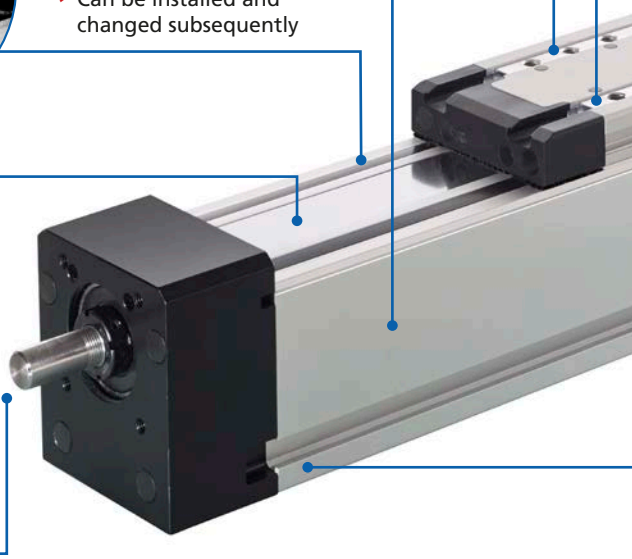

## Key features general

- High efficiency
- Low idle torque
- Max. usable travel speed regardless of length
- Central lubricating access on the carriage facilitates maintenance
- Profile slots for fastening the axis both at the sides and underneath
- Slot stones can be subsequently inserted in the side and bottom slots

### RK DuoLine S Protect (spindle drive)

- Degree of protection IP40 provided by steel cover strip and seals
- Positioning accuracy ±0.05 mm when using an integrated linear encoder
- Multiple anti-vibration spindle supports
- Pitch accuracy T5 with ball screw

### RK DuoLine R Protect (guide axis)

- Without dedicated drive
- Freely movable carriage

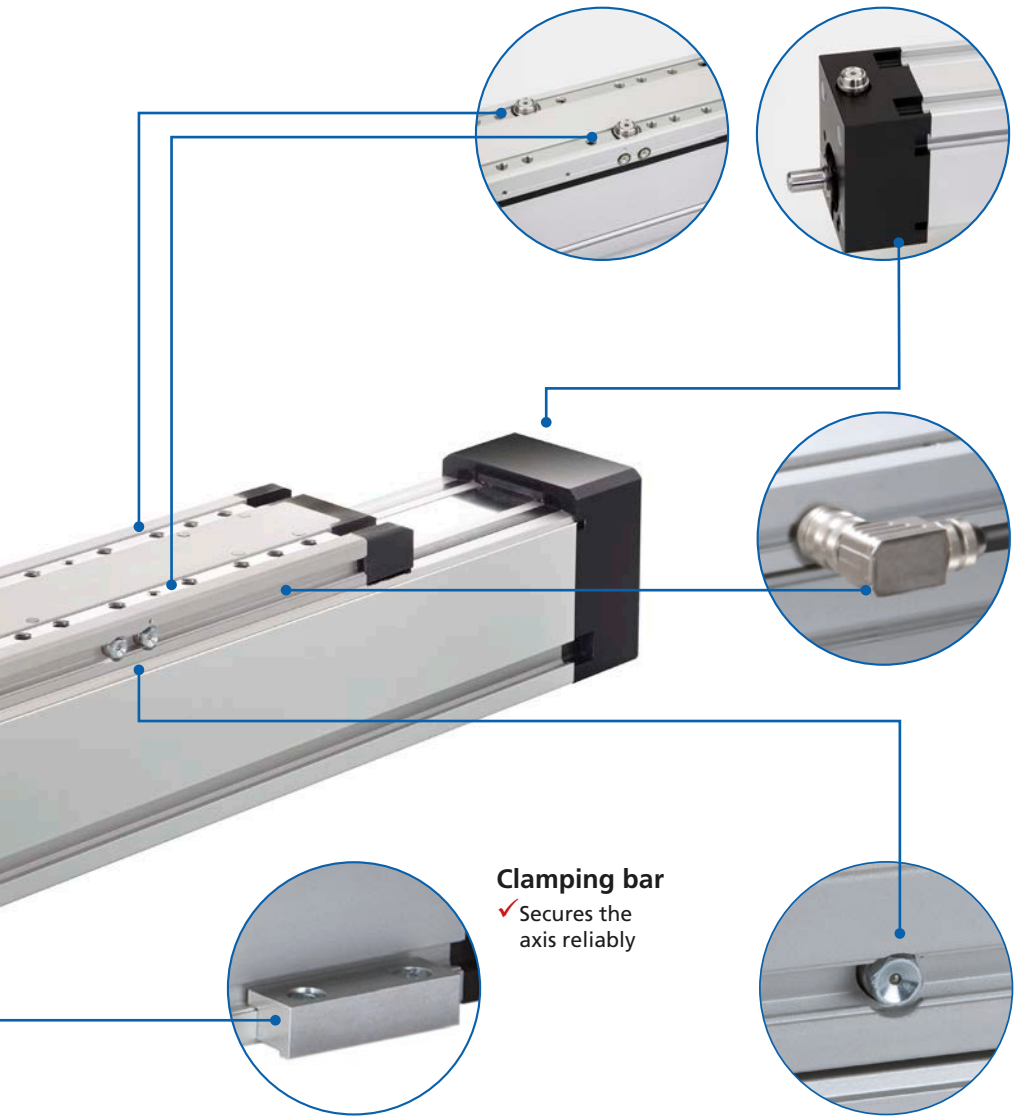

### Centring holes
- ✓ Reproducible payload position/linear unit

### Integr. position sensing system
- ✓ High positioning accuracy across the entire unit lengthe
- ✓ Direct detection of carriage position
- ✓ Elasticities of the drive train identifiable and can be offset by the motor controller

### Clamping bar
- ✓ Secures the axis reliably

### Tapered lubricating nipple
- ✓ Central lubricating access on the carriage facilitates maintenance
- ✓ RK DuoLine S with trapezoidal thread is lifetime lubricated*
- ✓ Alternative connection to permanent lubrication available on request

## Variants

RK DuoLine Clean suitable for use in cleanrooms up to ISO class 1

Fraunhofer IPA TESTED® DEVICE
RK Rose+Krieger GmbH
RK DuoLine S60 Clean
Report No. RK 1404-704

**Note:**
More information in chapter RK DuoLine Clean (p. 474)

* up to approximately 30 km running performance

# RK DuoLine Safelock

## Timing-belt- and Spindle units with secure locking function

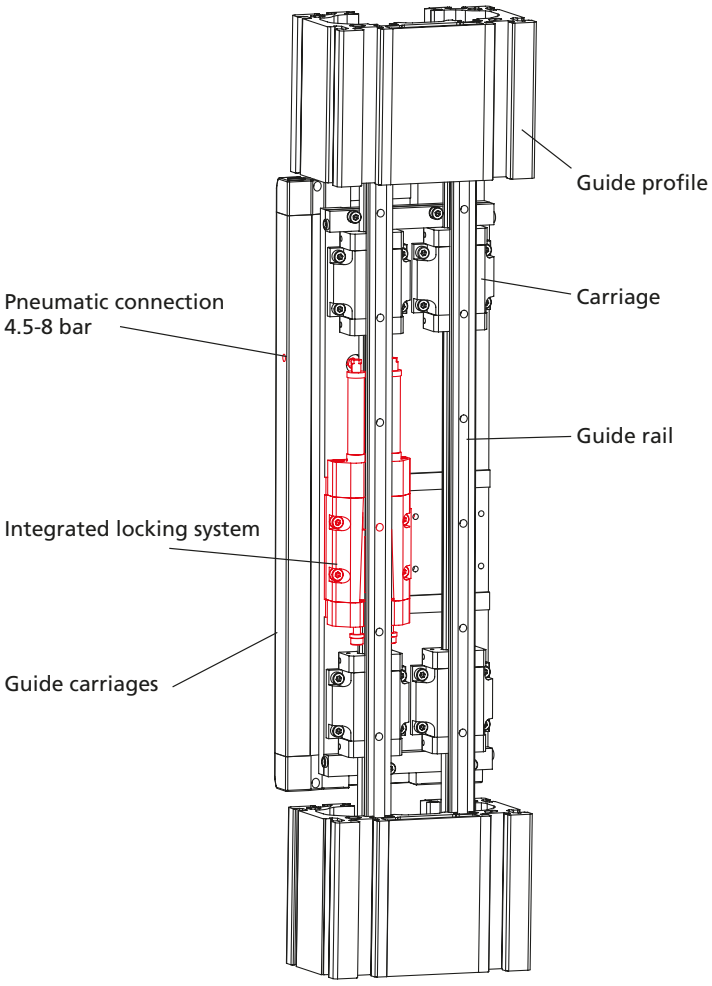




- ✓ As a safeguard for installation, removal and maintenance work
- ✓ Guaranteed nominal holding force on greased ball rails thanks to self-amplifying system
- ✓ „Safelock" safety locking device is an approved component in accordance with category 1 of DIN EN ISO 13849-1, which should be considered
- ✓ $B_{10}$ = 1.000.000 operations (static)
- ✓ Performance level PL D achievable. PL E as redundant version available on request
- ✓ Integrated locking system. No protruding contours outside the linear axis.
- ✓ Overload-proof locking element

| | Recirculating ball | Toothed belt | |
|---|---|---|---|
| | RK Duoline S 160 | RK Duoline Z 120 one ball rail | RK Duoline Z 160 |
| Nominal holding force Safelock (at $B_{10}$ = 1.000.000 operations) | 1800 N | 2500 N | 1800 N |
| DGUV test certification | Tested based on testing principles GS-MF-01 and GS-MF-28 | | Tested based on testing principles GS-MF-01 and GS-MF-28 |

**Note:**
Maximum holding force = 2x nominal holding force.
Emergency braking of a moving load is not proper use.
If the nominal holding force is exceeded, or after every emergency braking, a functional check has to be performed in normal mode as per the operating instructions.
www.rk-rose-krieger.com/fileadmin/catalogue/manuals_lineartechnik/99399_safelock15_ph.pdf

# RK DuoLine S 60/80/120/160 - Table of contents


## Properties/Technical data

- General information/operating conditions ... 452
- Load data ... 452
- Calculation of the load characteristic ... 453

## Versions
(Dimensions, order numbers)

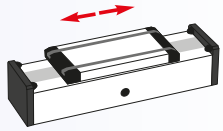

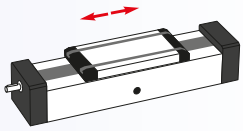

- DuoLine R guide unit ... 454
- Right-hand thread ... 454
- RK DuoLine S Safelock ... 460

## Accessories

**Fixing**

- Clamping bar ... 463
- Slot stone ... 463
- Centering Sets ... 464

**Drive**

- Transmission ... 466
- Angular gear ... 468
- Motor adaptor kit ... 470

**Position determination**

- Limit switches ... 471

# RK DuoLine S 60/80/120/160 – Technical data

## General information / operating conditions

| | RK DuoLine S 60 | RK DuoLine S 80 | RK DuoLine S 120 | RK DuoLine S 160 |
|---|---|---|---|---|
| Guidance system | 1 Ball rail system | 1 Ball rail system | 2 Ball rail system | 2 Ball rail system |
| Installation position | any position | | | |
| Max. driving torque | 3.4 Nm | 17 Nm | 32 Nm | 52 Nm |
| Max. speed | 0.283 / 0.467 / 0.747 m/s | 0.24 / 0.94 / 2.4 m/s (regardless of travel) | 0,24 / 1,2 / 2,4 m/s (regardless of travel) | 2 m/s (regardless of travel) |
| Max. acceleration | 20 m/s² | 20 m/s² | 20 m/s² | 20 m/s² |
| Repeat accuracy | ± 0.04 mm | ± 0.04 mm | ± 0.04 mm | ± 0.04 mm |
| Positioning accuracy | - | with integrated linear encoder ± (0.025 + 0.01 x L) mm; L = travel in meters | | |
| Max. no-load torque | 0.5 Nm | 0.6 Nm | 0.7 Nm | 0.9 Nm |
| Drive | Ball-and-screw Ø16, Pitch 5, 10, 16mm | Ball-and-screw, Ø20, Pitch 5, 20 or 50 mm, on the right | Ball-and-screw, Ø 25, Pitch 5, 25 or 50 mm | Ball-and-screw, Ø 32, Pitch 40 mm, on the right |
| Pitch accuracy | T5 (0.023 / 300 mm) | T5 (0,023 / 300 mm) | T5 (0,023 / 300 mm) | T5 (0,023 / 300 mm) |
| Duty cycle | S3 100% | S3 100% | S3 100% | S3 100% |
| Ambient temperature | 0 to +60°C | 0 to +60°C | 0 to +60°C | 0 to +60°C |
| Degree of protection | IP 40 | IP 40 | IP 40 | IP 40 |

## Dynamic load data

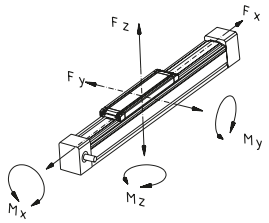


Force [N]

Torque [Nm]

| Spindle drive | | | | | | | |
|---|---|---|---|---|---|---|---|
| Load data | Spindle | Fx | Fy | Fz | Mx | My | Mz |
| Standard guide carriagew | | | | | | | |
| RK Duoline S 60 | 16x5 | 840 | 700 | 2500 | 48 | 160 | 140 |
| | 16x10 | 1300 | | | | | |
| | 16x16 | 1300 | | | | | |
| RK Duoline S 80 | 20x5 | 950 | 1000 | 4100 | 100 | 380 | 350 |
| | 20x20 | 1420 | | | | | |
| | 20x50 | 2250 | | | | | |
| RK Duoline S 120 | 25x5 | 1240 | 2000 | 6900 | 205 | 620 | 560 |
| | 25x25 | 2700 | | | | | |
| | 25x50 | 3400 | | | | | |
| RK DuoLine S 160<br>RK DuoLine S 160 Safelock | 32x40 | 8000 | 5100 | 8900 | 500 | 840 | 810 |
| Extended guide carriage | | | | | | | |
| RK Duoline S 60 | 16x5 | 840 | 700 | 2500 | 48 | 250 | 220 |
| | 16x10 | 1300 | | | | | |
| | 16x16 | 1300 | | | | | |
| RK Duoline S 80 | 20x5 | 950 | 1000 | 4100 | 100 | 620 | 550 |
| | 20x20 | 1420 | | | | | |
| | 20x50 | 2250 | | | | | |
| RK Duoline S 120 | 25x5 | 1240 | 2000 | 6900 | 205 | 940 | 790 |
| | 25x25 | 2700 | | | | | |
| | 25x50 | 3400 | | | | | |
| RK Duoline S 160 | 32x40 | 8000 | 5100 | 8900 | 500 | 1200 | 1150 |

## Geometric moment of inertia

[cm⁴]

| | Iy | Iz |
|---|---|---|
| RK DuoLine S 60 | 48.97 cm⁴ | 61.84 cm⁴ |
| RK DuoLine S 80 | 116.76 cm⁴ | 165.75 cm⁴ |
| RK DuoLine S 120 | 287.3 cm⁴ | 597.9 cm⁴ |
| RK DuoLine S 160 | 437.70 cm⁴ | 1455.90 cm⁴ |

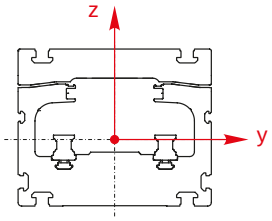

## Calculation of the load characteristic to define the lifetime

- The lifetime of linear units are in accordance with the average loads and moments of an application. The load characteristic can approximately calculated by following equation with simultaneously appearing load and moments.

$$\text{Load characteristic} = \frac{\text{Application values (z.B. Fy)}}{\text{Catalog values (z.B. Fy}_{max}\text{)}}$$

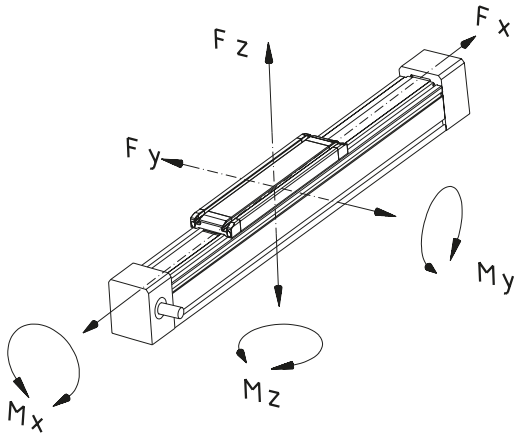


$$\textbf{Load characteristic } B_K = \frac{Fy}{Fy_{max}} + \frac{Fz}{Fz_{max}} + \frac{Mx}{Mx_{max}} + \frac{My}{My_{max}} + \frac{Mz}{Mz_{max}} \leq 1$$

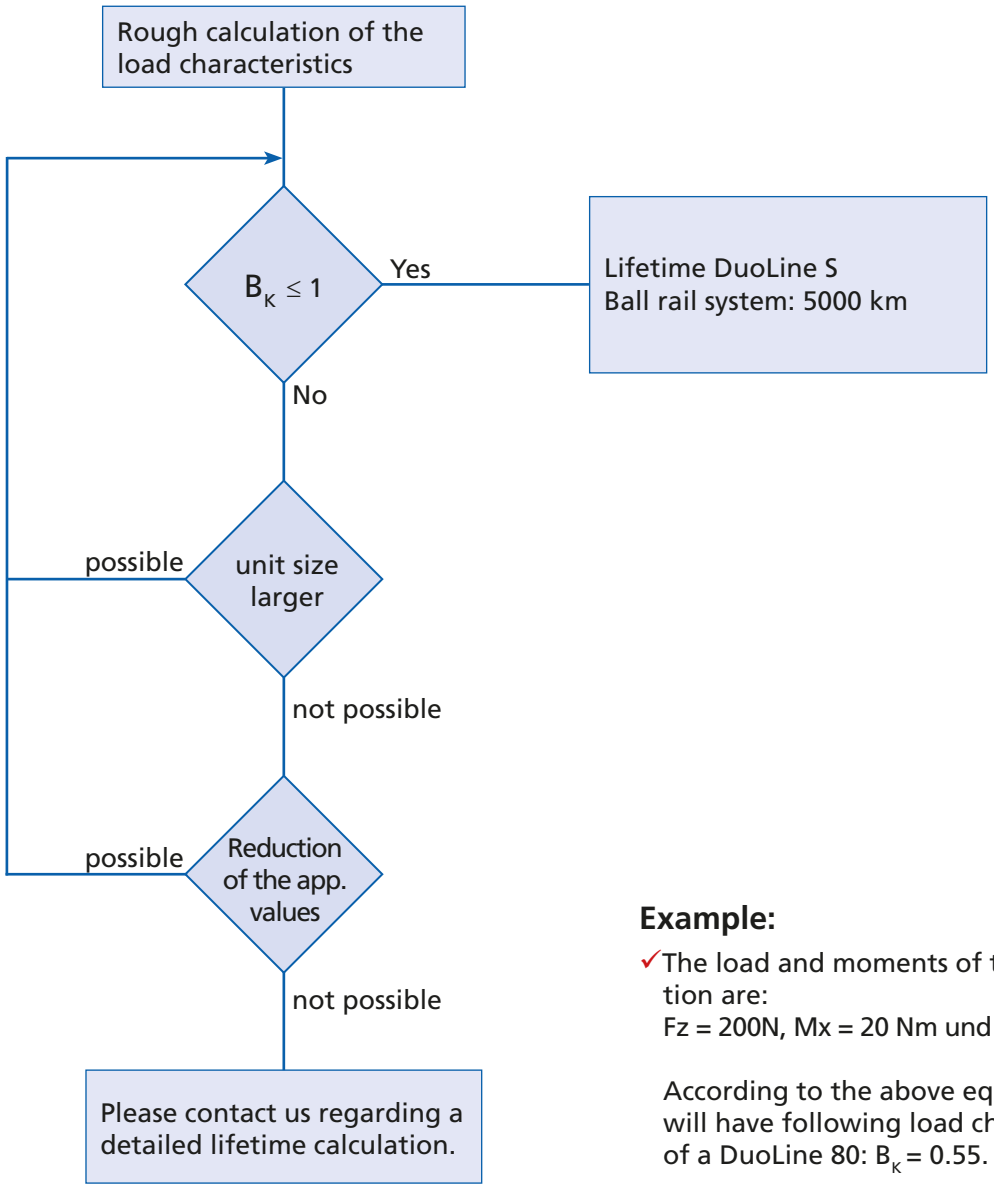


**Example:**

✓The load and moments of the application are:
Fz = 200N, Mx = 20 Nm und Mz = 45 Nm

According to the above equation you will have following load characteristic of a DuoLine 80: $B_K = 0.55$.

# RK DuoLine R 60/80/120 – Versions

**Order information:**

- Longer travel lengths on request
- Integrated linear encoder as Option

**Version**

## Guide

Ideal as additional / secondary support for the Duoline with toothed belt or spindle.



| Code No. | Type | Basic length | B | C |
|---|---|---|---|---|
| TD14A5T1A11A0 _ _ _ _ | RK DuoLine R 60 Protect | 295 | 60 | 80 |
| TD14A5T1B11A0 _ _ _ _ | RK DuoLine R 60 Protect with extended guide carriage | 385 | | |
| TD14A2T1A11A0 _ _ _ _ | RK DuoLine R 80 Protect | 352 | 80 | 100 |
| TD14A2T1B11A0 _ _ _ _ | RK DuoLine R 80 Protect with extended guide carriage | 484 | | |
| TD14A3T1A11A_ _ _ _ _ | RK DuoLine R 120 Protect one ball rail guide | 472 | 120 | 115 |
| TD14A3T1B11A_ _ _ _ _ | RK DuoLine R 120 Protect one ball rail guide with extended guide carriage | 616 | | |

Total lenght = basic length + total travel (mm)

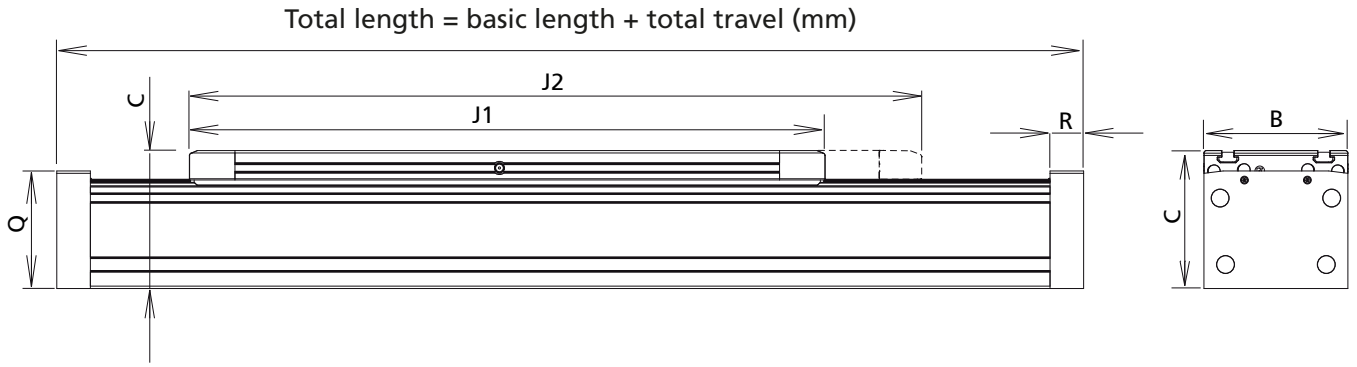


[mm]

| J1 | J2 | Q | R | max. travel | Mass [kg] | |
|---|---|---|---|---|---|---|
| | | | | | Basic length | per 100 mm travel |
| 245 | – | 70 | 22 | 3587 | 3,73 | 0,54 |
| – | 335 | | | 3497 | 4,46 | 0,54 |
| 278 | – | 97 | 22 | 7692 | 5,22 | 0,83 |
| – | 410 | | | 7560 | 6,89 | 0,83 |
| 386 | – | 98 | 28 | 7584 | 9,76 | 1,19 |
| – | 530 | | | 7440 | 12,16 | 1,19 |

# RK DuoLine S 60/80/120/160 – Versions

**Order information:**

- Second free concurrent carriage on request
- Also available without screw drive as a torque support

## Spindle unit RK DuoLine S with ball screw Control-Tec



| Code No. | Type | Basic length | | | B | C | D1 | D2 |
|---|---|---|---|---|---|---|---|---|
| | | Total length of up to 812 mm | Total length of 813-1899 mm | Total length of 1900 mm | | | | |
| TD13A5A1A1 _A0_ _ _ _ | RK DuoLine S 60 Protect | 321 | 391 | 471 | 60 | 80 | Ø32$^{H7}$ 2.3 deep | Ø10$_{k7}$ |
| TD13A5A1B1 _A0_ _ _ _ | RK DuoLine S 60 Protect with extended guide carriage | 411 | 481 | 561 | | | | |

Total lenght = basic length + total travel (mm)

**Ball screw:**
1 = 16x5
2 = 16x10
3 = 16x16

| Code No. | Type | Basic length | | | B | C | D1 | D2 |
|---|---|---|---|---|---|---|---|---|
| | | Total length of up to 1171 mm | Total length of 1172-3051 mm | Total length of 3052 mm | | | | |
| TD13A2A1A_ _A0_ _ _ _ | RK DuoLine S 80 Protect | 370 | 415 | 495 | 80 | 100 | Ø42$^{H7}$ 2.3 deep | Ø14$_{k7}$ |
| TD13A2A1B_ _A0_ _ _ _ | RK DuoLine S 80 Protect with extended guide carriage | 502 | 547 | 627 | 80 | 100 | Ø42$^{H7}$ 2.3 deep | Ø14$_{k7}$ |

Total lenght = basic length + total travel (mm)

**Ball screw:**
3 = 20x5
1 = 20x20
2 = 20x50

**Integrated linear encoder:**
1 = without
2 = with plug-in coupling and 20 m of cable
3 = with 20 m of cable

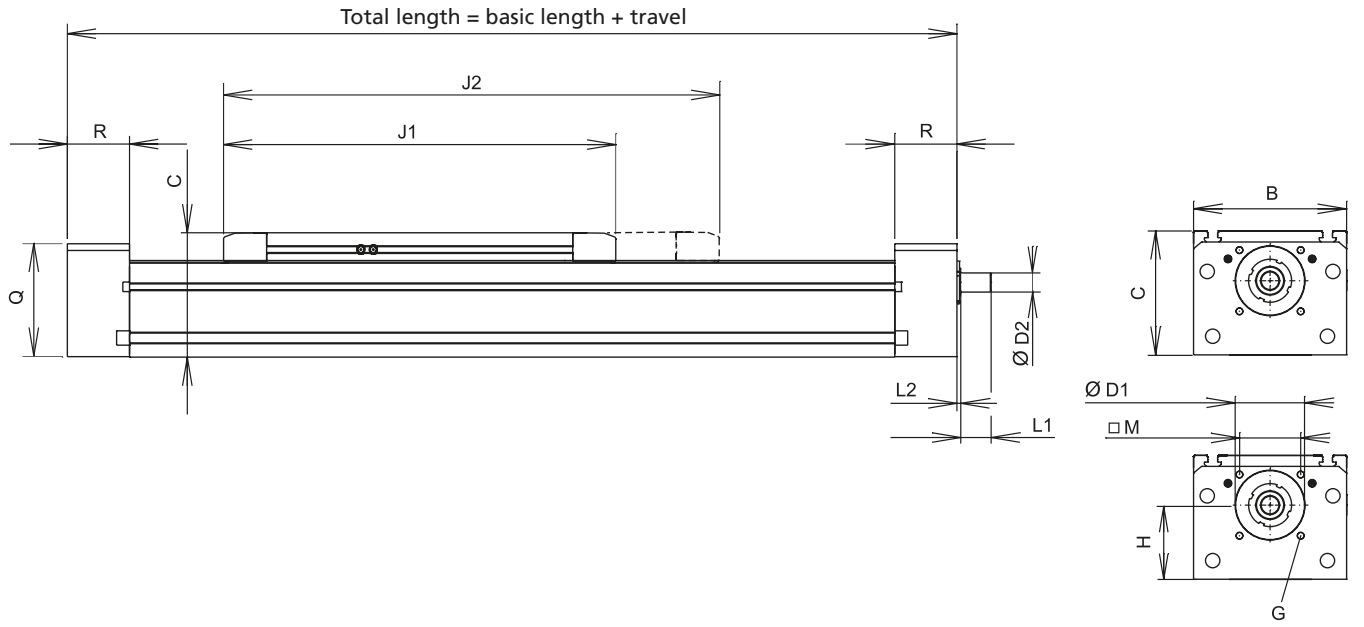


[mm]

| G | H | J1 | J2 | L1 | L2 | M | Q | R | max. travel | Mass [kg] Basic length | Mass [kg] per 100 mm travel |
|---|---|---|---|---|---|---|---|---|---|---|---|
| M5-10 deep | 47.7 | 245 | - | 17.2 | 2.8 | 33x24 | 72.2 | 38 | 2664 | 3.44 | 0.60 |
| | | - | 335 | | | | | | 2574 | 4.26 | 0.60 |

[mm]

| G | H | J1 | J2 | L1 | L2 | M | Q | R | max. travel | Masse [kg] Basic length | Masse [kg] per 100 mm travel |
|---|---|---|---|---|---|---|---|---|---|---|---|
| M6-18 deep | 57.5 | 278 | - | 30 | 3.8 | □46±0.2 | 89 | 46 | 4440 | 6.74 | 0.96 |
| M6-18 deep | 57.5 | - | 410 | 30 | 3.8 | □46±0.2 | 89 | 46 | 4368 | 8.01 | 0.96 |

# RK DuoLine S 60/80/120/160 – Versions

**Order information:**

- Second free concurrent carriage on request
- Also available without screw drive as a torque support

## Spindle unit RK DuoLine S with ball screw Control-Tec



| Code No. | Type | Basic length | | B | C | D1 | D2 |
|---|---|---|---|---|---|---|---|
| | | Total length of up to 3042 mm | Total length of 3043 mm | | | | |
| TD13A4A1A1 _A0_ _ _ _ | RK DuoLine S 120 Protect | 498 | 614 | 120 | 115 | Ø55$^{H7}$ 2.3 deep | Ø16$_{K6}$ |
| TD13A4A1B_ _A0_ _ _ _ | RK DuoLine S 120 Protect with extended guide carriage | 642 | 758 | | | | |

Total lenght = basic length + total travel (mm)

**Ball screw:**
1 = 25x5
2 = 25x25
3 = 25x50

**Integrated linear encoder:**
1 = without
2 = with plug-in coupling and 20 m of cable
3 = with 20 m of cable

| Code No. | Type | Basic length | | | B | C | D1 | D2 |
|---|---|---|---|---|---|---|---|---|
| | | Total length of up to 1350 mm | Total length of 1351-3350 mm | Total length of 3351 mm | | | | |
| TD13A1A1A12A0_ _ _ _ | RK DuoLine S 160 Protect | 540 | 602 | 702 | 160 | 130 | Ø75$^{H7}$ 2.3 deep | Ø20$_{K8}$ |
| TD13A1A1B_2A0_ _ _ _ | RK DuoLine S 160 Protect with extended guide carriage | 690 | 752 | 852 | 160 | 130 | Ø75$^{H7}$ 2.3 deep | Ø20$_{K8}$ |

Total lenght = basic length + total travel (mm)

**Integrated linear encoder:**
1 = without
2 = with plug-in coupling and 20 m of cable
3 = with 20 m of cable

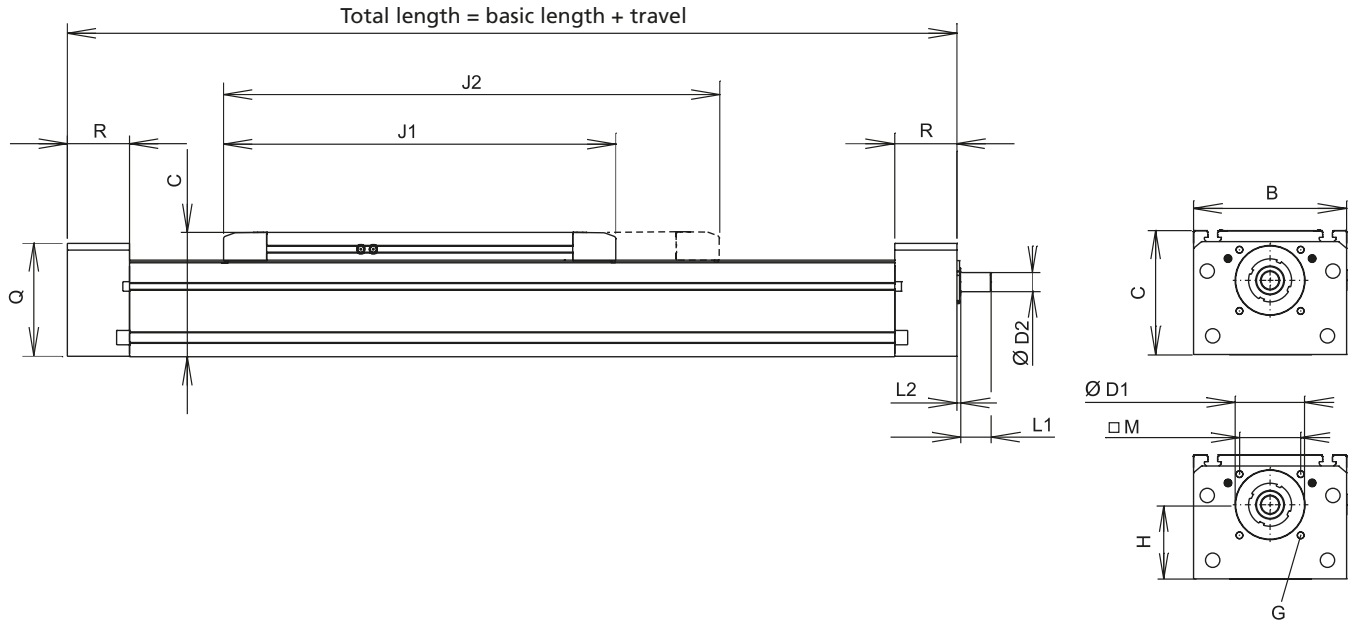


[mm]

| G | H | J1 | J2 | L1 | L2 | M | Q | R | max. travel | Mass [kg] | |
|---|---|---|---|---|---|---|---|---|---|---|---|
| | | | | | | | | | | Basic length | per 100 mm travel |
| M6-18 deep | 72.7 | 386 | - | 30 | 2,5 | □46±0.2 | 104 | 55 | 4591 | 14.57 | 1,49 |
| | | - | 530 | | | | | | 4447 | 16.74 | 1,49 |

[mm]

| G | H | J1 | J2 | L1 | L2 | M | Q | R | max. travel | Mass [kg] | |
|---|---|---|---|---|---|---|---|---|---|---|---|
| | | | | | | | | | | Basic length | per 100 mm travel |
| M8-22 deep | 78 | 410 | - | 32 | 3,7 | □64±0.2 | 118 | 65 | 4300 | 23.26 | 2,21 |
| M8-22 deep | 78 | - | 560 | 32 | 3,7 | □64±0.2 | 118 | 65 | 4150 | 26.59 | 2,21 |

# RK DuoLine S Safelock

**Order information:**

- Longer travel lengths on request



| Code No. | Type | Spindle | Basic length | B | C | ØD1 | ØD2 | G |
|---|---|---|---|---|---|---|---|---|
| TD13A1A1C_1__0___ | RK DuoLine S Safelock 160 | 32x40 | 805 | 160 | 130 | $75^{H7}$ | $20_{h8}$ | M8-22 deep |

Total length (basic length + travel) in mm

**Version:**
Q = Motor at top / Profile moves
L = Motor at top / Carriage moves
T = Motor at bottom / Carriage moves

**Integrated position sensing system:**
1 = without
2 = with plug-in coupling and 20 m of cable
3 = with 20 m of cable

| Q | L | T |
|---|---|---|
| 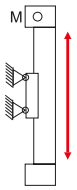 | 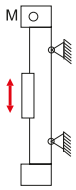 | 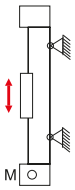 |

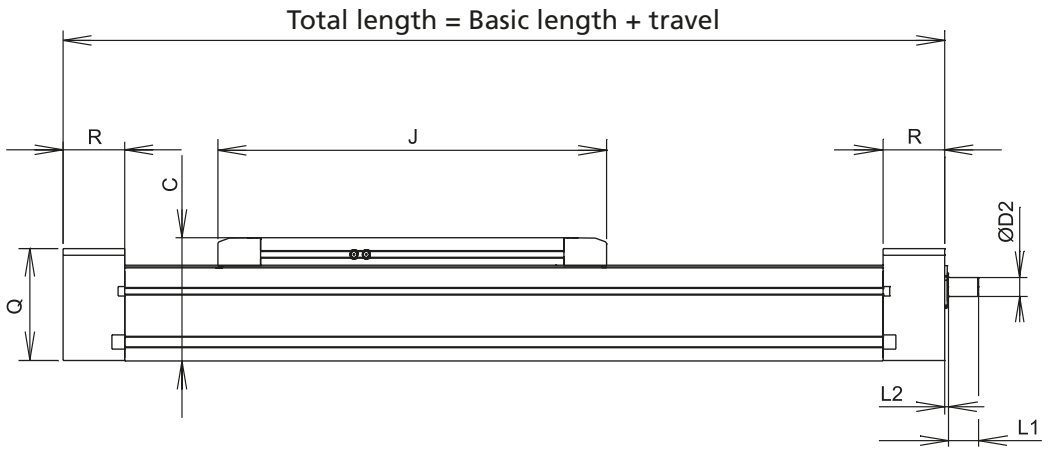


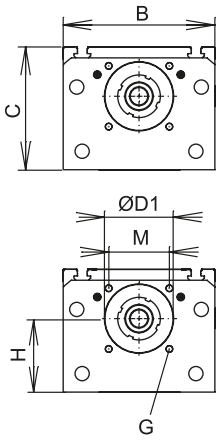


[mm]

| H | J | L1 | L2 | M | Q | R | Max. travel | Mass [kg] | |
|---|---|---|---|---|---|---|---|---|---|
| | | | | | | | | Basic length | per 100 mm travel |
| 78 | 675 | 32 | 3.7 | □64±0.2 | 118 | 65 | 4275 | 31,66 | 2.21 |

# RK DuoLine S 60/80/120/160 – Fixing

## Fixation of payload and Accessories

- Two slot stone strips have been inserted in the guide carriage on which fittings can be securely attached in a variety of ways
- Profile slots in the guide carriage and guide profiles facilitate fixation
- See next page for details of clamping strips and slot stones

### RK DuoLine R/S 60

*only with version with extended guide carriage

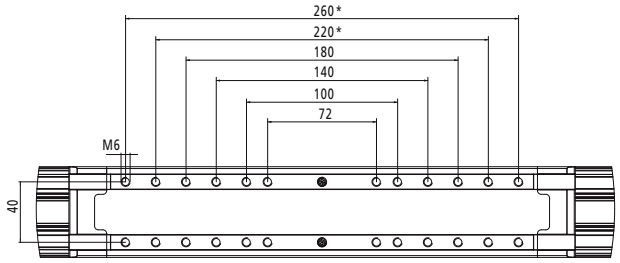


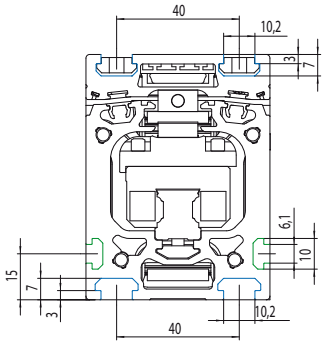


20 slot geometry
30 slot geometry

### RK DuoLine R/S 80

*only with version with extended guide carriage

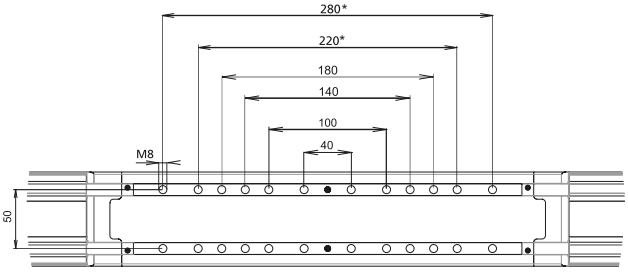


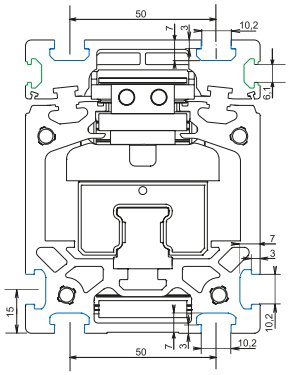


20 slot geometry
30 slot geometry

### RK DuoLine R/S120

*only with version with extended guide carriage

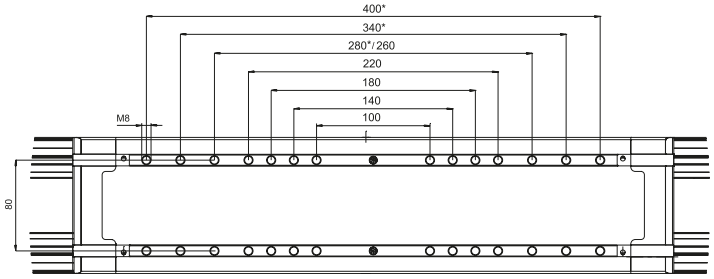


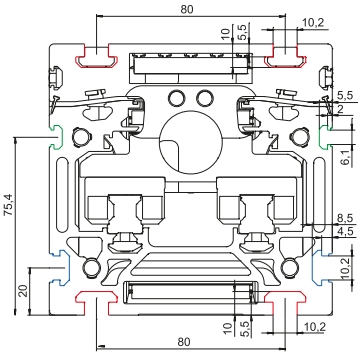


20 slot geometry
30 slot geometry
40 slot geometry

### RK DuoLine S160

*only with version with extended guide carriage

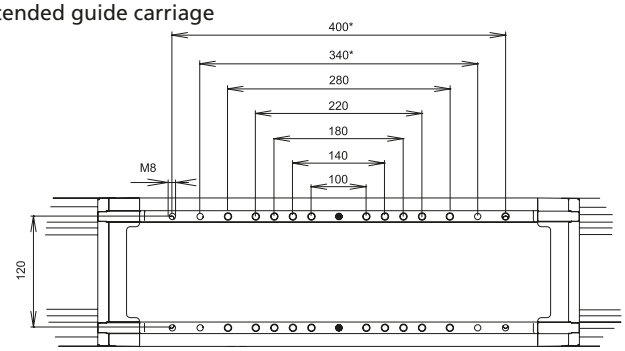


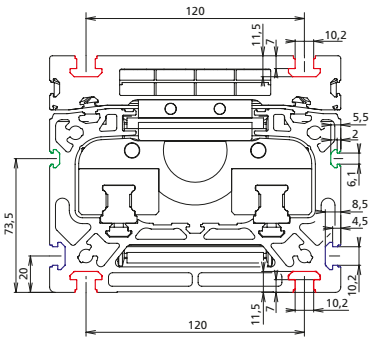


20 slot geometry
30 slot geometry
40 slot geometry

## Clamping bars

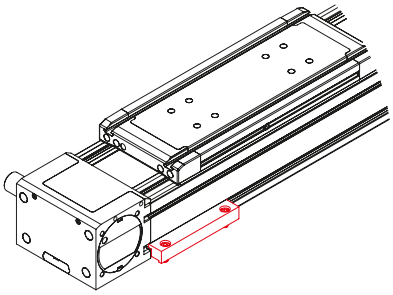

Fig.1: Base mounting

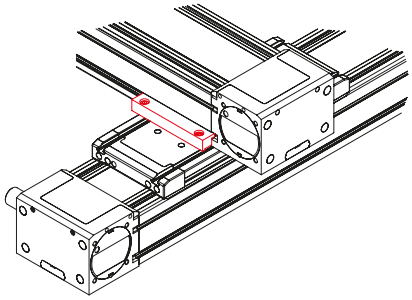

Fig. 2: Crossing units

- Clamping bars facilitate fixation of the linear unit to the base or connection of two units to form a cross table

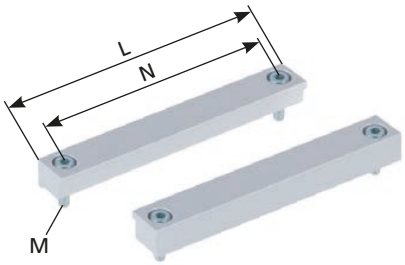


**Material:**
Natural anodised aluminium, galvanised fastenings
**Scope of delivery:**
2 clamping bars with fastenings

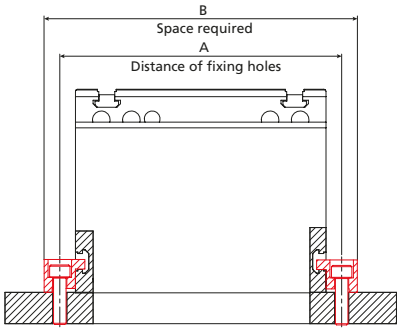


[mm]

| Code No. | Type | Fig. | A | B | L | M | N |
|---|---|---|---|---|---|---|---|
| 91818 | RK DuoLine 60 ground assembly | 1 | 72 | 91 | 57 | M6 | 40 |
| | RK DuoLine 60 crossing to 60 | 2 | | | | | |
| 91806 | RK DuoLine 80 ground assembly | 1 | 100 | 122 | 76 | M8 | 50 |
| | RK DuoLine 80 crossing to 80 | 2 | | | | | |
| 91812 | RK DuoLine 120 ground assembly | 1 | 140 | 160 | 116 | M8 | 80 |
| | RK DuoLine 120 crossing to 120 | 2 | | | | | |
| | RK DuoLine 160 crossing to 120 | 2 | | | | | |
| 91802 | RK DuoLine 160 ground assembly | 1 | 180 | 200 | 156 | M8 | 120 |
| | RK DuoLine 160 crossing to 160 | 2 | | | | | |
| | RK DuoLine 120 crossing to 160 | 2 | | | | | |

**Order instruction square nut:**

- **Purchase only in lot sizes and a multiple of that, see product table below**

## Slot stones

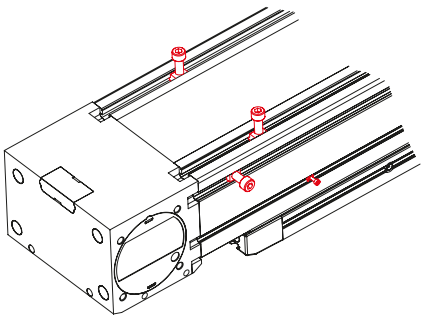

View of DuoLine from below

- Slot stones can be inserted and positioned on the guide profile and carriage

**Material:** galvanised steel

**Slot stone -B-**
can be swivelled into the slot

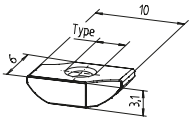


**Slot stone -N-**
can be slid into the slot

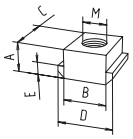


**Slot stone -K-**
can be swivelled into the slot

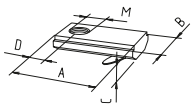


[mm]




| Code No. | Type | lot sizes | Slot geometry | A | B | C | D | E | M | F [N] |
|---|---|---|---|---|---|---|---|---|---|---|
| Slot stone -B- | | | | | | | | | | |
| E00017CEE | M3 | 10, 20, 30... pcs | 20 | | | | | | | |
| E00058CEE | M4 | 10, 20, 30... pcs | 20 | | | | | | | |
| Slot stone -N- | | | | | | | | | | |
| 4006202 | M8 | 10, 20, 30... pcs | 30 | 5 | 10 | 13 | 13 | 3 | M8 | 4000 |
| 4026206 | M8 | 10, 20, 30... pcs | 40 | 8 | 10 | 13 | 15 | 4 | M8 | 9000 |
| Slot stone -K- | | | | | | | | | | |
| 4006211 | M5 | 10, 20, 30... pcs | 30 | 21 | 12 | 4 | 7 | – | M5 | 5000 |
| 4006212 | M6 | 10, 20, 30... pcs | 30 | 21 | 12 | 4 | 7 | – | M6 | 5000 |
| 4016212 | M6 | 10, 20, 30... pcs | 40 | 21 | 14 | 4 | 7 | – | M6 | 5000 |

## Centering Sets for RK DuoLine

- The following positions could be defined exactly during the design process per set
  - Load capacity
  - Linear unit
- Reproductable position of the load capacity
- Reduced assembly/disassembly time of the load capacity or the linear unit
- Accuracy of the centering bolts h6
- **To use for all RK DuoLine linear units in Basic and Protect design from October 2015 production date**

**Scope of delivery per set:**
2 centering bolts and fixing material

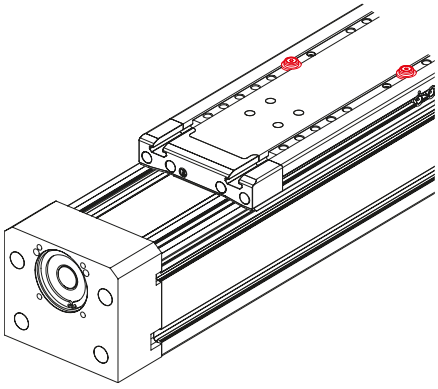

Fig. 1: Slide centering

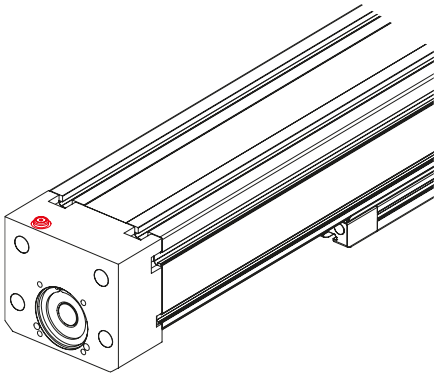

Fig. 2: Base centering

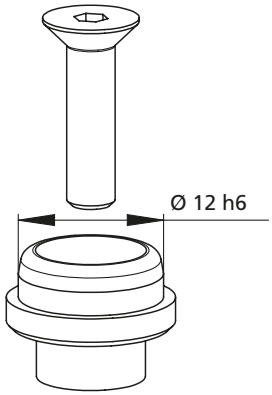


**Size -A-**

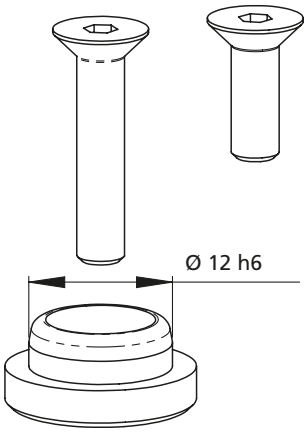


**Size -B-**

| Code No. | Type | Use for |
|---|---|---|
| 91898 | Centering Set Size -A- | Slide centering RK DuoLine S 60 + S 80 |
| 91899 | Centering Set Size -B- | Slide centering RRK DuoLine S 120 + S 160<br>Base centering RK DuoLine S 60 + S 80 + S 120 + S 160 |

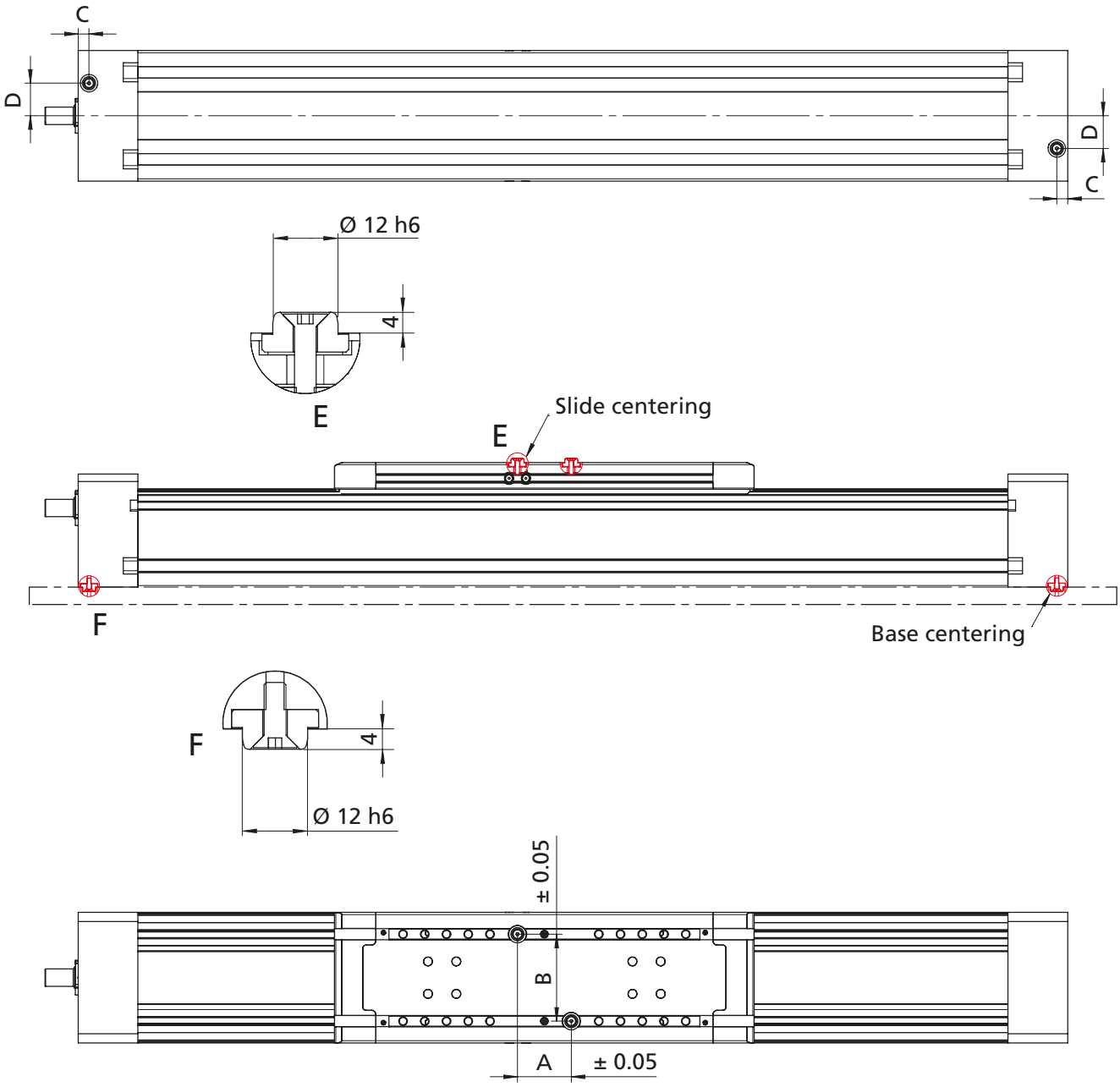


[mm]

| Type | A | B | C | D |
|---|---|---|---|---|
| RK DuoLine S 60 | 42 | 40 | 10 | 0 |
| RK DuoLine S 60 with extended guide carriage | 48 | 40 | 10 | 0 |
| RK DuoLine S 80 | * | * | 10 | 15 |
| RK DuoLine S 80 with extended guide carriage | 70 | 50 | 10 | 15 |
| RK DuoLine S 120 | 49.5 | 80 | 10 | 30 |
| RK DuoLine S 120 with extended guide carriage | 250 | 80 | 10 | 30 |
| RK DuoLine S 160 | 70 | 120 | 10 | 40 |
| RK DuoLine S 160 with extended guide carriage | 366 | 120 | 10 | 40 |

***Note:**
Centering on request only with special drill holes in the slide/clamp strips possible

## Transmission



- For parallel-axis motor configuration
- **Freely selectable position of motor in 90° increments, position can be subsequently modified at any time**
- **Freely selectable position of timing-belt transmission in 90° increments, position can be subsequently modified at any time**
- Fits any RK DuoLine S Protect
- Reduction 1:1
- No load data or speed restrictions of the respective RK DuoLine S
- Motor adaptation suitable for RK-AC servomotors without gear and SEW RF 17 Three-phase motors Ø 120
- We can also adapt customer motors if required

**Scope of delivery:**
Transmission complete with fixing material and motor adaptation, not fitted.

## General information

| Type | Protection class (fitted) | Required radial forces of motor shaft [N] |
|---|---|---|
| Transmission for RK DuoLine 60 S | IP 40 | 400 |
| Transmission for RK DuoLine 80 S | IP 40 | 600 |
| Transmission for RK DuoLine 120 S | IP 40 | 600 |

| Code No. | Type | Motor flange | Motor shaft Ø | Suitable for motor |
|---|---|---|---|---|
| 98330A1A1A1 | Transmission for RK DuoLine 60 S | IM B5 56 | 14 | RK-AC 240 without gear |
| 98331A1A1B2 | Transmission for RK DuoLine 80 S | IM B5 63 | 19 | RK-AC 470 without gear |
| 98332A1A1B2 | Transmission for RK DuoLine 120 S | | | |
| 98331A1A1A3 | Transmission for RK DuoLine 80 S | IM B5 56 | 20 | SEW RF 17 Three-phase motor Ø 120 |
| 98332A1A1A3 | Transmission for RK DuoLine 120 S | | | |

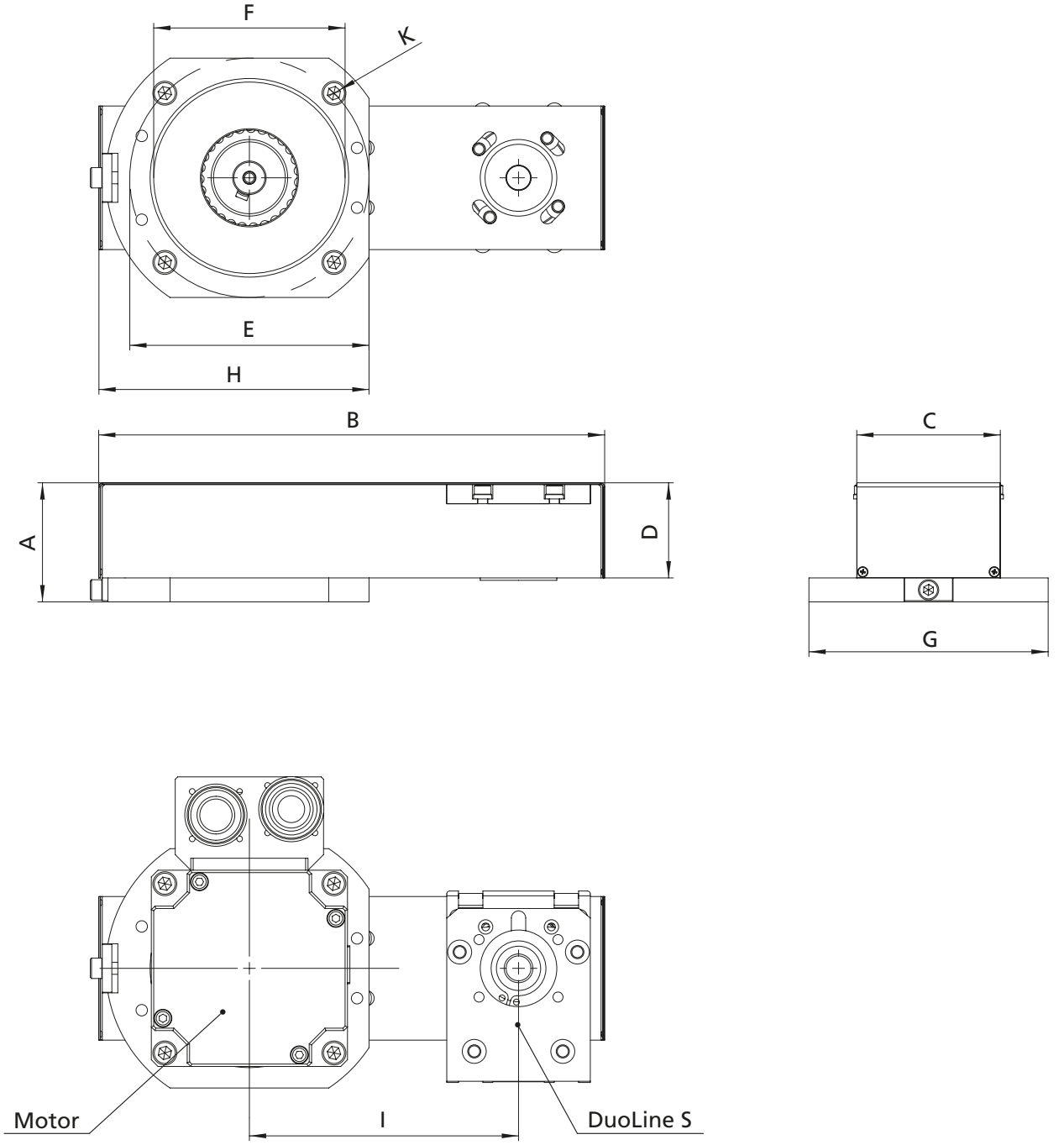


[mm]

| A | B | C | D | E | F | G | H | I | K | Masse [kg] |
|---|---|---|---|---|---|---|---|---|---|---|
| 49,75 | 211,5 | 60 | 39,75 | 100 | $80^{F7}$ 4,5 deep | 100 | 113 | 112,5 | M6/ 10 deep | 1,0 |
| 59,75 | 245,5 | 80 | 49,75 | 115 | $95^{F7}$ 4,5 deep | 100 | 118 | 144 | M8/ 10 deep | 2,0 |
| 59,75 | 285,5 | 80 | 49,75 | 115 | $95^{F7}$ 4,5 deep | 100 | 118 | 184,5 | M8/ 10 deep | 2,2 |
| 59,75 | 245,5 | 80 | 49,75 | 100 | $80^{F7}$ 4,5 deep | 120 | 123,5 | 144 | M8/ 10 deep | 2,0 |
| 59,75 | 285,5 | 80 | 49,75 | 100 | $80^{F7}$ 4,5 deep | 120 | 123,5 | 184,5 | M8/ 10 deep | 2,2 |

**Order information:**

- Reductions 1:1.5, 1:2, 1:3, 1:4 or 1:5 on request

## Angular gear

- Fits all third-generation RK DuoLine S
- Can be retrofitted
- Low torsional backlash
- Low noise level
- Spiral toothing

**Scope of delivery:**
Angular gear 1:1,
Fastenings on RK DuoLine and synchronisation shaft depending on system



## Technical data angular gear

| | | For RK DuoLine 60 and 80 S | For RK DuoLine 120 and 160 S |
|---|---|---|---|
| Reduction | | 1:1 | 1:1 |
| Drive speed | $min^{-1}$ | 3000 | 3000 |
| Torsional backlash at output shaft | arcmin | ≤ 9 | ≤ 8 |
| Efficiency at full load | % | > 98 | > 98 |
| Running noise at 1500 rpm | db(A) | ≤ 70 | ≤ 74 |
| Weight | Kg | 4,5 | 8 |
| Surface | | Primer RAL 9005 – black matt | |
| Geometric moment of inertia | $Kgcm^2$ | 1,79 | 3,88 |

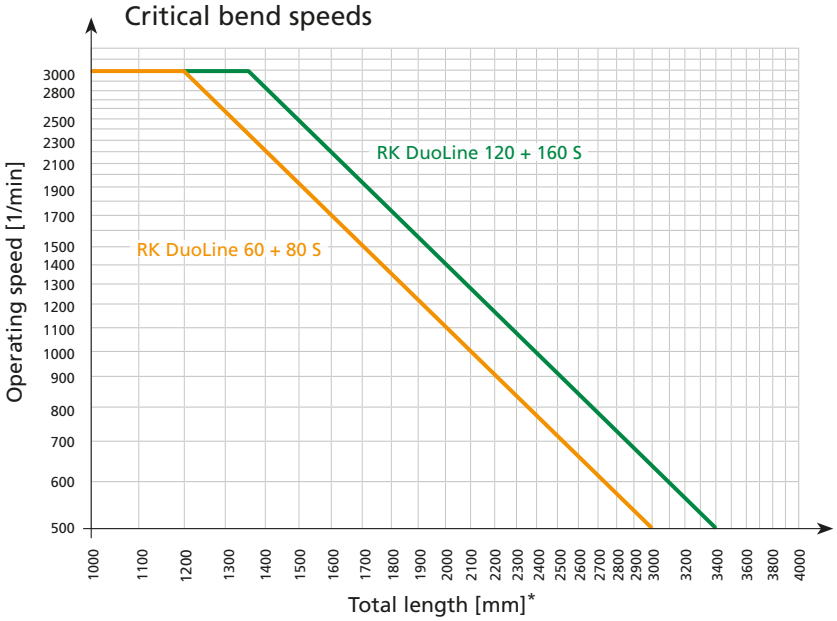


*To calculate the critical bending speed of system 4, use half of the total length.

## Angular gear for RK DuoLine S

System 1

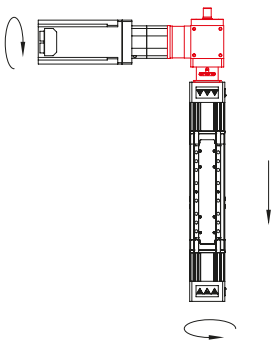

System 2

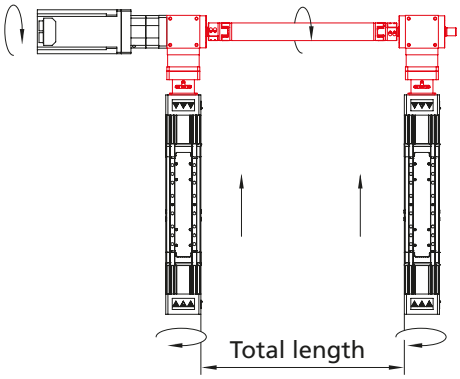


System 3

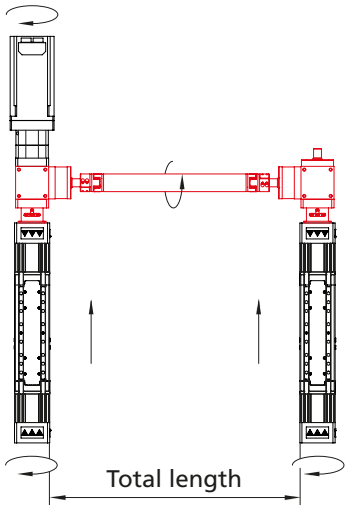


System 4

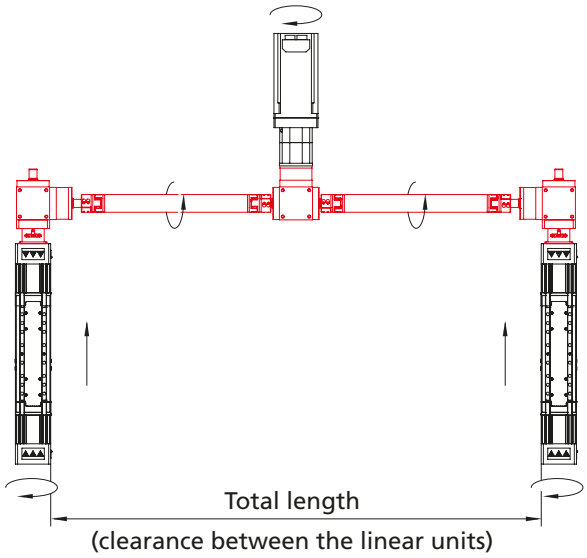


[mm]

| Code No. | Type | Basic length (minimum length) | | Max. length (clearance) | | Weight [kg] | | |
|---|---|---|---|---|---|---|---|---|
| | | 60 + 80 S | 120 + 160 S | 60 + 80 S | 120 + 160 S | Basic length 60 + 80 S | Basic length 120 + 160 S | per 100 mm travel |
| 982_ _ A1A0000 | Angular gear system 1 | - | | | | 5,5 | 9,5 | - |
| 982_ _ A1B_ _ _ _ | Angular gear system 2 | 199 | 199 | 2984 | 3331 | 10,5 | 15,5 | 0,1 |
| 982_ _ A1C_ _ _ _ | Angular gear system 3 | 304 | 319 | 3089 | 3451 | 10,5 | 15,5 | 0,1 |
| 982_ _ A1D_ _ _ _ | Angular gear system 4 | 563 | 638 | 6153 | 6942 | 10,5 | 15,5 | 0,1 |

982_ _ A1D_ _ _ _

Total length (mm)

30 = RK DuoLine 60 S
31 = RK DuoLine 80 S
32 = RK DuoLine 120 S
33 = RK DuoLine 160 S

**Note:**
Additional information, dimensions, accessories and necessary tools for assembling the angular gears can be found

**Chapter:**
Motors and controls

## Motor adapter kit for RK AC servomotors

- Servomotors from the RK standard range can be easily connected
- Complete motor adapter kits manufactured to your specifications on request

**Scope of delivery:**
Motor adapter kit, elastomer coupling and fixation material

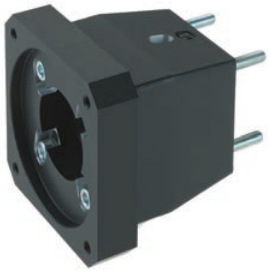

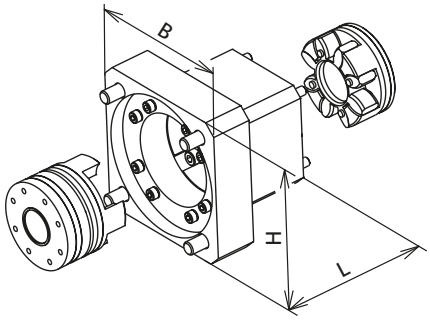


| Type | Servo motors without gearbox | | | | |
|---|---|---|---|---|---|
| | RK-AC 118 | RK-AC 240 | RK-AC 470 | RK-AC 800 | RK-AC 1252<br>RK-AC 1776<br>RK-AC 2521 |
| DuoLine S 60 | 949388 | 949389 | – | – | – |
| DuoLine S 80 ball screw | – | 949367 | 949366 | – | – |
| DuoLine S 120 | – | 949123 | 949124 | 949125 | – |
| DuoLine S 160 | – | – | – | 949340 | 949342 |
| Angular gear system 1 and 4 for RK DuoLine S 60 + 80 | – | 949130 | 949131 | – | – |
| Angular gear system 1 and 4 for RK DuoLine S 120 + 160 | – | – | 949135 | 949136 | 949137 |
| Angular gear system 2 and 3 for RK DuoLine S 60 + 80 | – | 949139 | 949140 | – | – |
| Angular gear system 2 and 3 for RK DuoLine S 120 + 160 | – | – | 949141 | 949142 | 949143 |

| Type | Servo motors with gearbox | | | | | Three phase motors | |
|---|---|---|---|---|---|---|---|
| | RK-AC 112 | RK-AC 260<br>RK-AC 280 | RK-AC 345 | RK-AC 800 | RK-AC 1252<br>RK-AC 1776<br>RK-AC 2521 | 90/120 W | 180/250 W |
| DuoLine S 60 | 949387 | – | – | – | – | – | – |
| DuoLine S 80 ball screw | 949360 | 949364 | – | – | – | 949363 | 949365 |
| DuoLine S 120 | 949121 | 949122 | – | – | – | 949126 | 949127 |
| DuoLine S 160 | – | – | 949341 | 949341 | 949343 | – | – |

## Mechanical limit switch

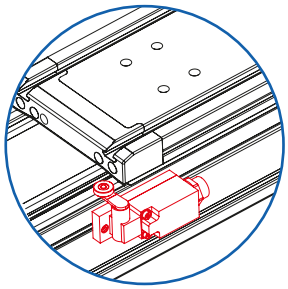

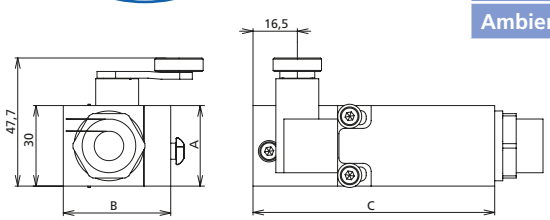


- External fixation on the guide profile

**Scope of delivery:**
Limit switch with set of fixing items

| | |
|---|---|
| Voltage | max. 230 V AC |
| Max. switching current | 4 A |
| Max. starting current | 10 A |
| Operating frequency | max. 5000 / h |
| Mechanical lifetime | 20x10$^6$ cycles |
| Axis leverage adjustment | locking by 360° |
| Degree of protection | IP67 |
| Ambient temperature | -30°C to +80°C |

| Code No. | Type | A | B | C | Version |
|---|---|---|---|---|---|
| 92848 | RK DuoLine 60 | 49 | 39 | 82 | NO / NC, mechanical limit switch |
| 91919 | RK DuoLine 80 | 63 | 40 | 83 | |
| 92701 | RK DuoLine 120 | 31 | 40 | 97 | |
| 91910 | RK DuoLine 160 | 30 | 40 | 90 | |

## External inductive limit switch

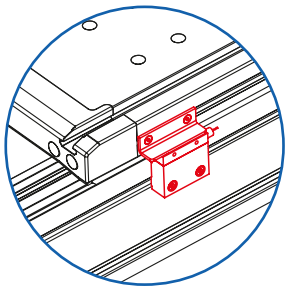

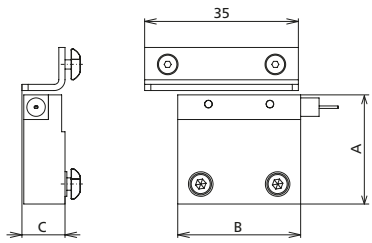


- External fixation on the guide profilev

**Scope of delivery:**
Limit switch with set of fixing items

| | |
|---|---|
| Voltage | 10...30 VDC |
| Max. switching current | 100 mA |
| Operating frequency | max. 5 kHz |
| Mechanical lifetime | independent of operating cycles |
| Operating distance | 1.5 mm |
| Degree of protection | IP67 |
| Cable length | 5 m* |
| Ambient temperature | -25°C to +70°C |

*Other cable lengths available on request.

| Code No. | Type | A | B | C | Version |
|---|---|---|---|---|---|
| 92838 | RK DuoLine 60 | 52,8 | 25 | 10 | NO, External inductive limit switch |
| 92819 | RK DuoLine 80 | 71,5 | 25 | 10 | |
| 92840 | RK DuoLine 120 | 22 | 40 | 14 | |
| 92810 | RK DuoLine 160 | 35,5 | 40 | 14 | |

## Internal inductive limit switch

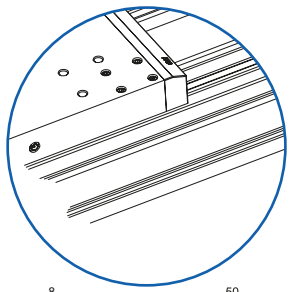

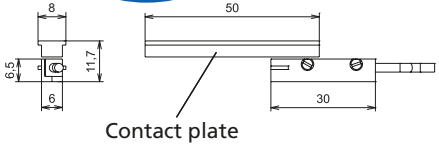


- Proximity switch integrated in the guide profile – no protruding contours

**Scope of delivery:**
Proximity switch with set of fixing items

| Code No. | Type | Version |
|---|---|---|
| 92828 | RK DuoLine 60 | NC, Internal inductive limit switch |
| 92820* | RK DuoLine 80<br>RK DuoLine 120<br>RK DuoLine 160 | |

*On this limit switch, the slot must be sealed off with a cover profile

## Cover profile

| Code No. | Version | | |
|---|---|---|---|
| E00024DAC | bar | black | 2.000 mm |

# Assembly examples

## RK DuoLine



1

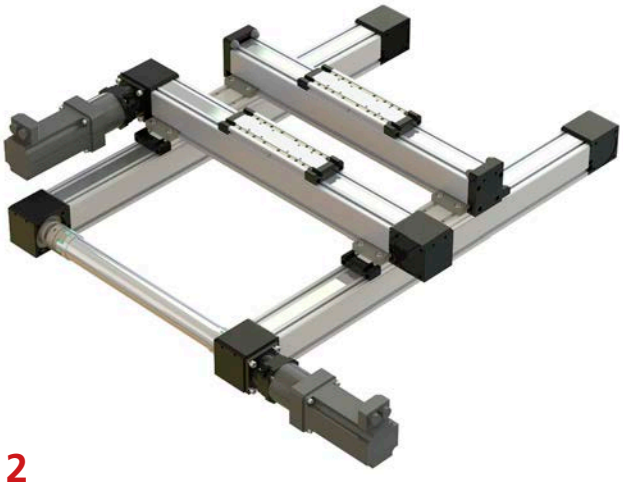

2

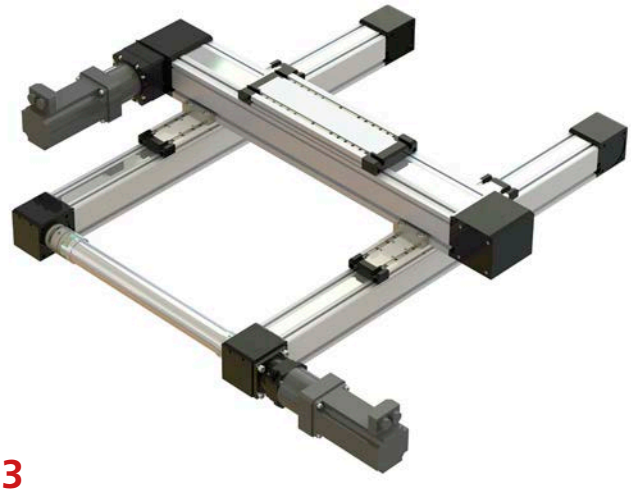

3



4



5



6

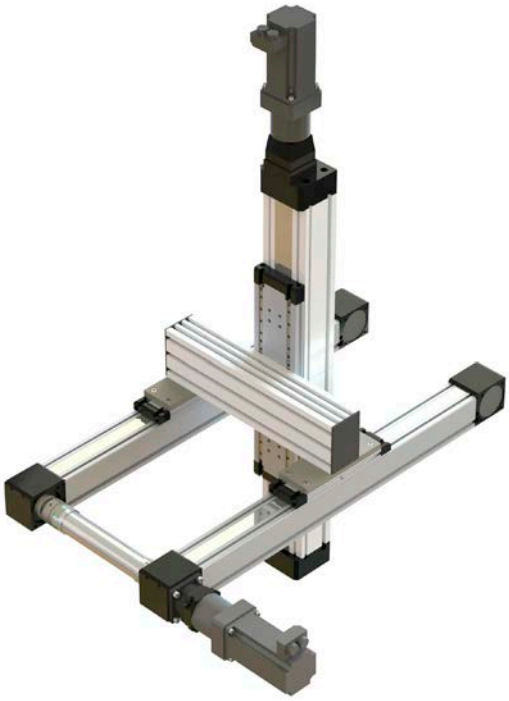

7

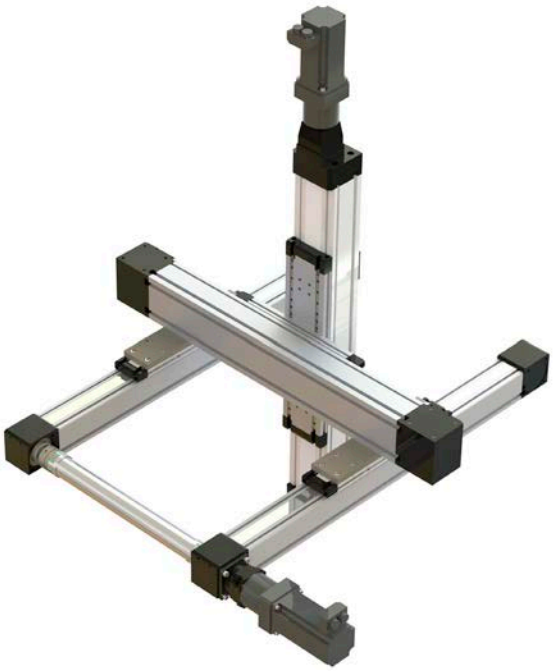

8

# RK DuoLine S / R Clean Key features / technical benefits

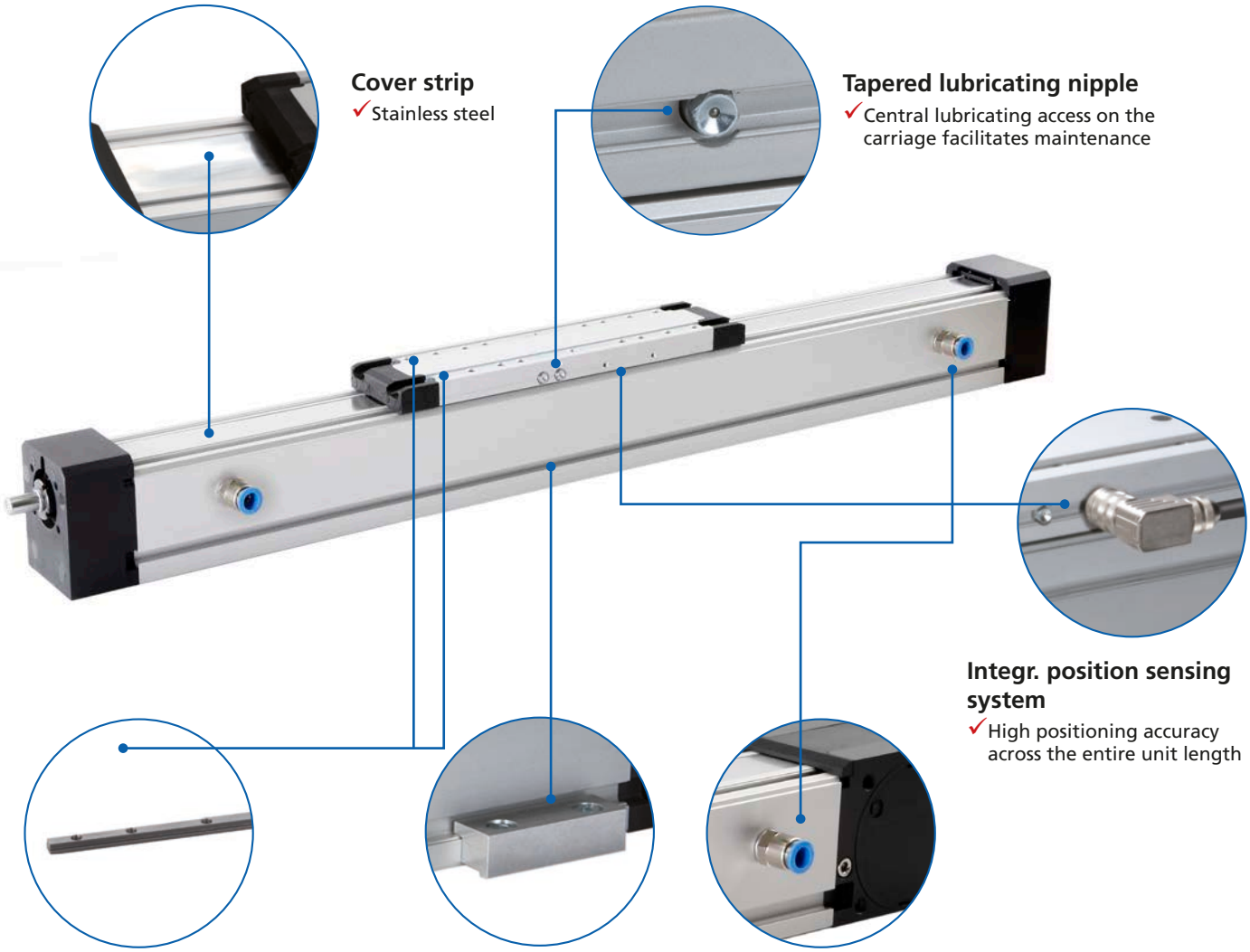

**Cover strip**
✓ Stainless steel

**Tapered lubricating nipple**
✓ Central lubricating access on the carriage facilitates maintenance

**Integr. position sensing system**
✓ High positioning accuracy across the entire unit length

**Slot stone strip**
✓ To hold your load securely
✓ Nickel-plated

**Clamping strip**
✓ Secures the axis reliably

**Vacuum extraction**
✓ Optional

## Key features

### General

- All external steel parts nickel-plated or made of stainless steel
- Suitability according to EN ISO 14644-1 for clean rooms
- Optionally with or without vacuum extraction
- High efficiency
- Low no-load torque
- Central lubricating access on the carriage facilitates maintenance

### RK DuoLine S Clean (spindle drive)

- Cover band made from stainless steel
- Positioning accuracy ±0.05 mm when using an integrated linear encoder
- Repeat accuracy ±0.04 mm

# RK DuoLine - Table of contents


## Properties / Technical data

- Load characteristic ..... 476
- General informations/operation conditions .... 478
- Cleanroom air categories ..... 479

## Version
(Dimensions, order numbers)

**Control-Tec**

- RK DuoLine R 60/80 Clean ..... 480
- RK DuoLine S 60 Clean ..... 482
- RK DuoLine S 80 Clean ..... 482

## Accessories

**Fixing**

- Fixation of payload ..... 484
- Clamping strips ..... 485
- Slot stones ..... 485

**Drive**

- Motor adapter kit ..... 486

**Position determination**

- Limit switch ..... 487

## Calculation of the load characteristic to define the lifetime

- The lifetime of linear units are in accordance with the average loads and moments of an application. The load characteristic can approximately calculated by following equation with simultaneously appearing load and moments.

$$\text{Load characteristic} = \frac{\text{Application values (z.B. Fy)}}{\text{Catalog values (z.B. Fy}_{max}\text{)}}$$

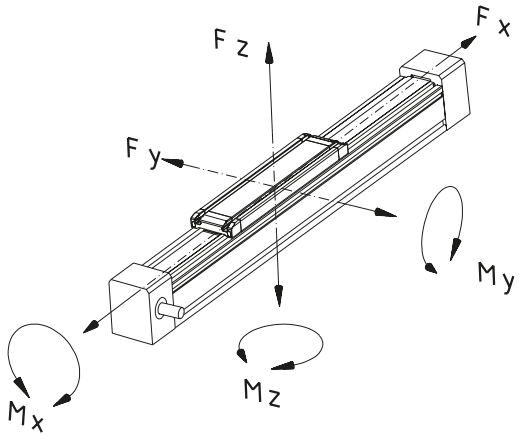


$$\textbf{Load characteristic } B_K = \frac{Fy}{Fy_{max}} + \frac{Fz}{Fz_{max}} + \frac{Mx}{Mx_{max}} + \frac{My}{My_{max}} + \frac{Mz}{Mz_{max}} \leq 1$$

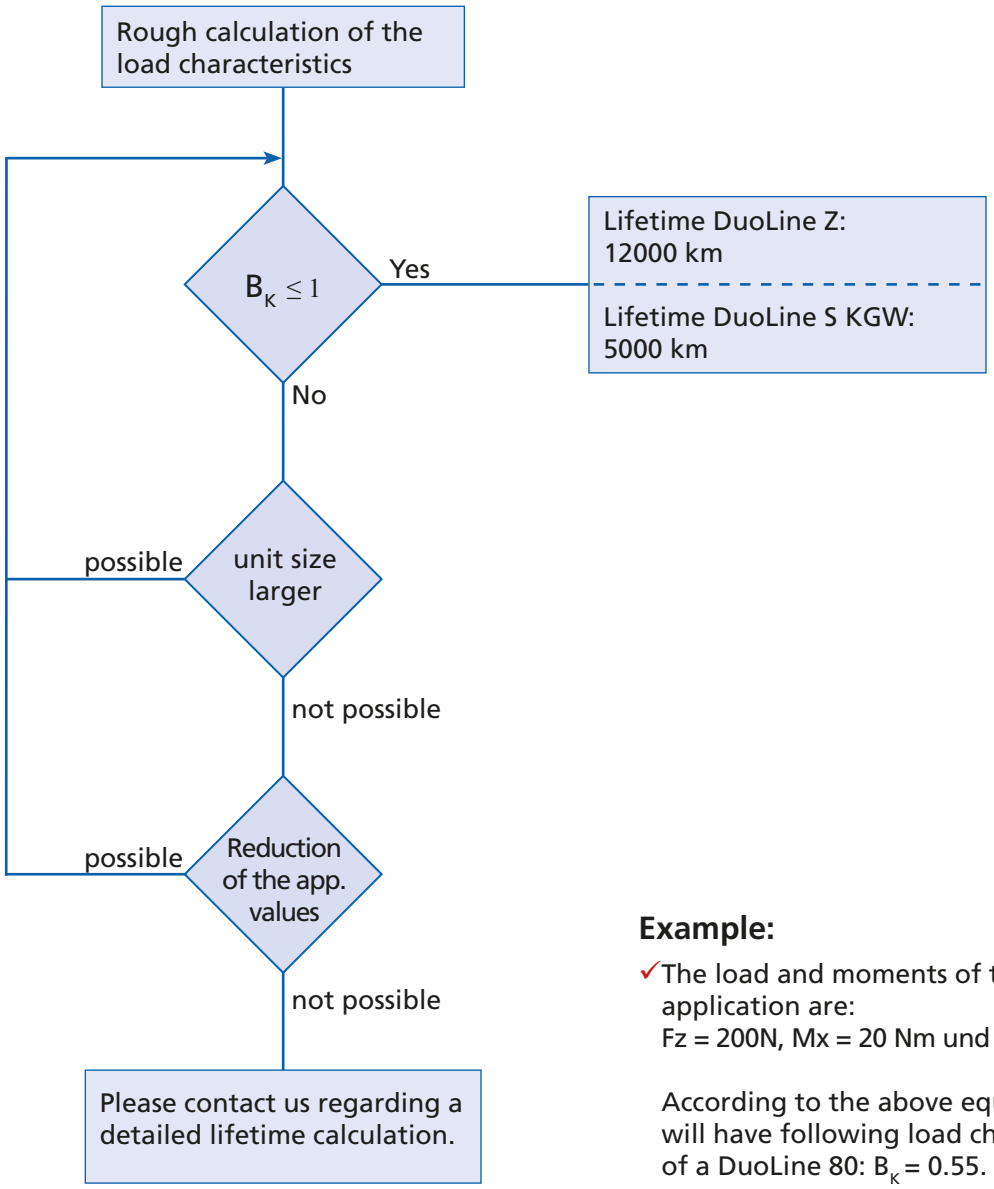


**Example:**

✓The load and moments of the application are:
Fz = 200N, Mx = 20 Nm und Mz = 45 Nm

According to the above equation you will have following load characteristic of a DuoLine 80: $B_K = 0.55$.

Fraunhofer IPA
TESTED® DEVICE
RK Rose+Krieger GmbH
RK DuoLine S60 Clean
**Report No. RK 1404-704**



## General information / operating conditions

| | RK DuoLine S 60 Clean | RK DuoLine S 80 Clean |
|---|---|---|
| Guidance system | 1 Ball rail system | |
| Installation position | any position | |
| Max. driving torque | 3,4 Nm | 17 Nm |
| Max. speed | 0,5 m/s | 0,5 m/s |
| Max. acceleration | 4 m/s² | 4 m/s² |
| Repeat accuracy | ± 0,04 mm | ± 0,04 mm |
| Positioning accuracy | only without integrated linear encoder<br>± 0,1/300 mm | with integrated linear encoder<br>± (0.025 + 0.01 x L) mm; L = travel in meters |
| Max. no-load torque | 0,4 Nm | 0,6 Nm |
| Drive | Ball-and-screw Ø16,<br>Pitch 5, 10, 16mm | Ball-and-screw Ø20,<br>Pitch 5, 20 or 50 mm, on the right |
| Pitch accuracy | T5 (0,023 / 300 mm) | T5 (0,023 / 300 mm) |
| Duty cycle | S3 100% | S3 100% |
| Ambient temperature | 0 to +60°C | 0 to +60°C |

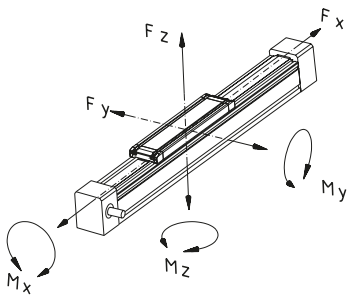


## Dynamic load data

Force [N]
Torque [Nm]

| Toothed-belt drive | | | | | | | |
|---|---|---|---|---|---|---|---|
| Load data | Screw | Fx | Fy | Fz | Mx | My | Mz |
| Standard guide carriagew | | | | | | | |
| RK Duoline S 60 | 16x5 | 840 | 700 | 2500 | 48 | 160 | 140 |
| | 16x10 | 1300 | | | | | |
| | 16x16 | 1300 | | | | | |
| RK Duoline S 80 | 20x5 | 950 | 1000 | 4100 | 100 | 380 | 350 |
| | 20x20 | 1420 | | | | | |
| | 20x50 | 2250 | | | | | |
| Extended guide carriage | | | | | | | |
| RK Duoline S 60 | 16x5 | 840 | 700 | 2500 | 48 | 250 | 220 |
| | 16x10 | 1300 | | | | | |
| | 16x16 | 1300 | | | | | |
| RK Duoline S 80 | 20x5 | 950 | 1000 | 4100 | 100 | 620 | 550 |
| | 20x20 | 1420 | | | | | |
| | 20x50 | 2250 | | | | | |

## Control of Screw speed (Critical screw speed)

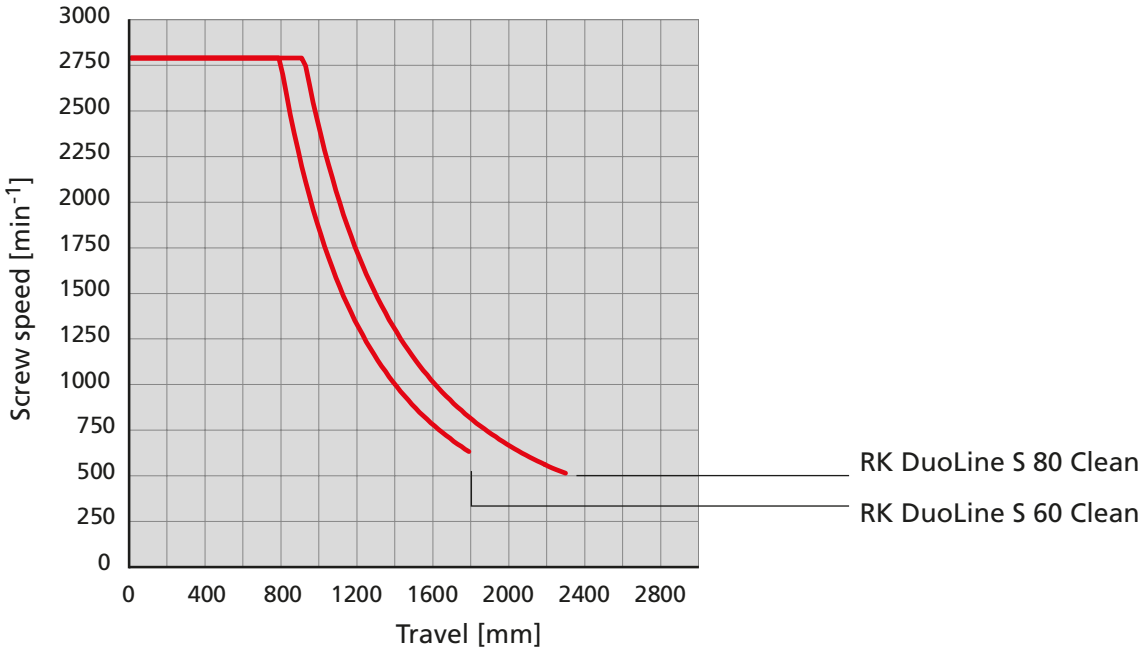


## Suitable for use in air purity levels according to EN ISO 14644-1

You find the documents and certificates with the test parameters on the website **www.rk-rose-krieger.com**

| Type | Clean room categories | | | | | |
|---|---|---|---|---|---|---|
| | ISO 1 | ISO 2 | ISO 5 | ISO 6 | ISO 7 | ISO 8 |
| RK DuoLine S 60 Clean without suction | | | 0,1 m/s | 0,25 m/s | 0,5 m/s | |
| RK DuoLine S 60 Clean with suction | 0,1m/s; 0,25m/s and 0,5m/s | | | | | |
| RK DuoLine S 80 Clean without suction | | | | | 0,1m/s | 0,25m/s; 0,5m/s |
| RK DuoLine S 80 Clean with suction | 0,1 m/s | 0,25m/s; 0,5m/s | | | | |

## Geometric moment of inertia

[$cm^4$]

| | Iy | Iz |
|---|---|---|
| RK DuoLine S 60 Clean | 48,97 $cm^4$ | 61,84 $cm^4$ |
| RK DuoLine S 80 Clean | 116,76 $cm^4$ | 165,75 $cm^4$ |

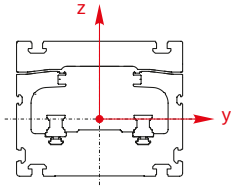

# RK DuoLine R 60 / 80 Clean – Versions

**Order information:**

- Longer travel lengths on request
- Integrated linear encoder as Option for size 80

**Version:** ■ **Guide**

Ideal as additional / secondary support for the Duoline with toothed belt or spindle. Identical construction to Z/S 60 and 80, but without drive



| Code No. | Type | Basic length | B | C |
|---|---|---|---|---|
| TD17A5T1A11_0 _ _ _ _ | RK DuoLine R 60 Clean | 295 | 60 | 80 |
| TD17A5T1B11_0 _ _ _ _ | RK DuoLine R 60 Clean with extended guide carriage | 385 | | |
| TD17A2T1A11_0 _ _ _ _ | RK DuoLine R 80 Clean | 352 | 80 | 100 |
| TD17A2T1B11_0 _ _ _ _ | RK DuoLine R 80 Clean with extended guide carriage | 484 | | |

Total lenght = basic length + total travel (mm)

A = without connection for vacuum suction
C = with connection for vacuum suction

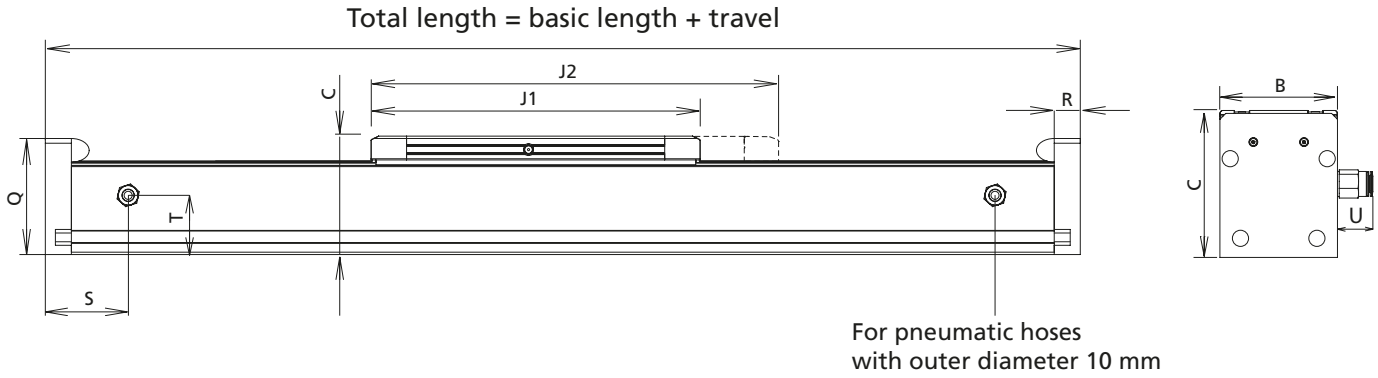


[mm]

| J1 | J2 | Q | R | S | T | U | Max. travel | Mass [kg] | |
|---|---|---|---|---|---|---|---|---|---|
| | | | | | | | | Basic length | per 100 mm travel |
| 245 | – | 70 | 22 | 72 | 38 | 24 | 3587 | 3,73 | 0,54 |
| – | 335 | | | | | | 3497 | 4,46 | 0,54 |
| 278 | – | 97 | 22 | 72 | 50 | 24 | 7692 | 5,22 | 0,83 |
| – | 410 | | | | | | 7560 | 6,89 | 0,83 |

**Order information:**

- Longer travel lengths on request
- Also available without screw drive as a torque support
- Version with vacuum extraction as option

## Spindle unit RK DuoLine S Clean with ball screw




| Code No. | Type | Basic length | B | C | D1 | D2 |
|---|---|---|---|---|---|---|
| TD16A5A1A1 _ _0_ _ _ _ | RK DuoLine S 60 Clean | 321 | 60 | 80 | Ø32$^{H7}$ 2,3 deep | Ø10$_{k7}$ |
| TD16A5A1B1 _ _0_ _ _ _ | RK DuoLine S 60 Clean with extended guide carriage | 411 | | | | |

Total lenght = basic length + total travel (mm)

A = without connection for vacuum extraction
C = with connection for vacuum extraction

**Ball screw:**
1 = 16x5
2 = 16x10
3 = 16x16

| Code No. | Type | Basic length | B | C | D1 | D2 |
|---|---|---|---|---|---|---|
| TD16A2A1A_ _ _0_ _ _ _ | RK DuoLine S 80 Clean | 370 | 80 | 100 | Ø42$^{H7}$ 2,3 deep | Ø14$_{k7}$ |
| TD16A2A1B_ _ _0_ _ _ _ | RK DuoLine S 80 Clean with extended guide carriage | 502 | 80 | 100 | Ø42$^{H7}$ 2,3 deep | Ø14$_{k7}$ |

Total lenght = basic length + total travel (mm)

A = without connection for vacuum extraction
C = with connection for vacuum extraction

**Ball screw:**
3 = 20x5
1 = 20x20
2 = 20x50

**Integrated linear encoder**
1 = without
2 = with plug-in coupling and 20 m of cable
3 = with 20 m of cable

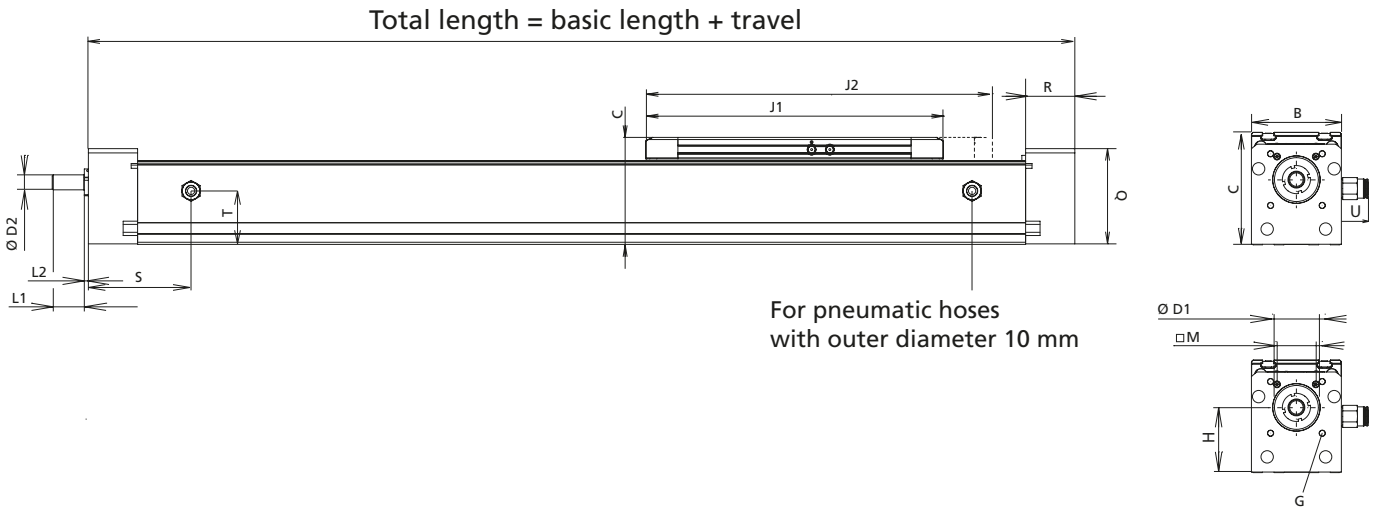


[mm]

| G | H | J1 | J2 | L1 | L2 | M | Q | R | S | T | U | max. travel | Mass [kg] | |
|---|---|---|---|---|---|---|---|---|---|---|---|---|---|---|
| | | | | | | | | | | | | | Basic length | per 100 mm travel |
| M5-10 deep | 47,7 | 245 | - | 17,2 | 2,8 | 33x24 | 72,2 | 38 | 88 | 38 | 24 | 1800 | 3,44 | 0,60 |
| | | - | 335 | | | | | | | | | 1710 | 4,26 | 0,60 |

[mm]

| G | H | J1 | J2 | L1 | L2 | M | Q | R | S | T | U | max. travel | Mass [kg] | |
|---|---|---|---|---|---|---|---|---|---|---|---|---|---|---|
| | | | | | | | | | | | | | Basic length | per 100 mm travel |
| M6-18 deep | 57,5 | 278 | - | 30 | 3,8 | □46±0,2 | 89 | 46 | 96 | 50 | 24 | 1930 | 6,74 | 0,96 |
| M6-18 deep | 57,5 | - | 410 | 30 | 3,8 | □46±0,2 | 89 | 46 | | | | 1798 | 8,01 | 0,96 |

# Fixation

## Fixation of payload

- Two slot stone strips have been inserted in the guide carriage on which fittings can be securely attached in a variety of ways
- Profile slots in the guide carriage and guide profiles facilitate fixation

## RK DuoLine R/S/Z 60

*only with version with extended guide carriage

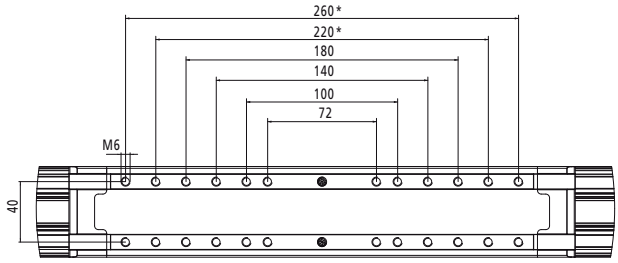


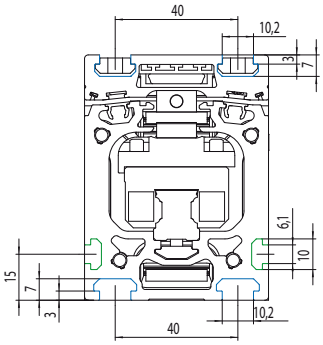


20 slot geometry

30 slot geometry

## RK DuoLine R/S/Z 80

*only with version with extended guide carriage

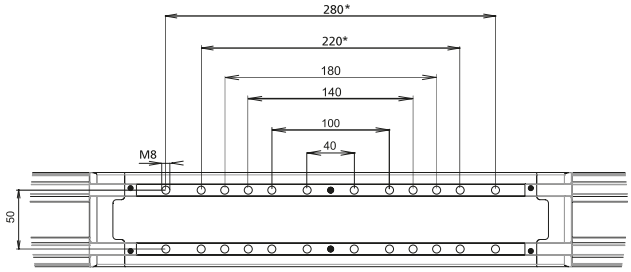


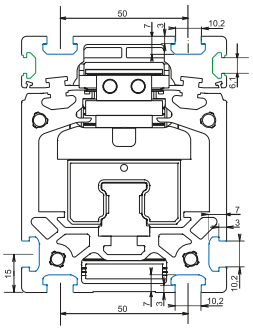


20 slot geometry

30 slot geometry

## Clamping strips

- Clamping strips facilitate fixation of the linear unit to the chassis or two units to a crossing table

**Material:**
Natural anodised aluminium, fixation material stainless steel or nickel-plated
**Scope of delivery:**
2 clamping strips with fixation material

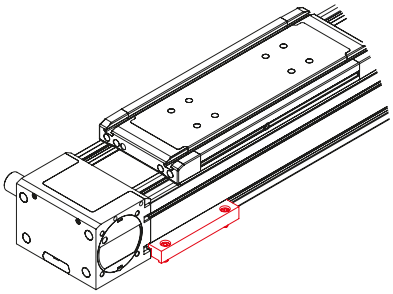

Fig.1: Ground assembly

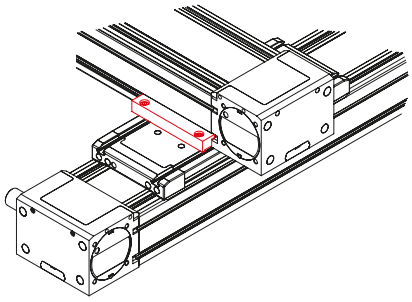

Fig.2: Crossing units

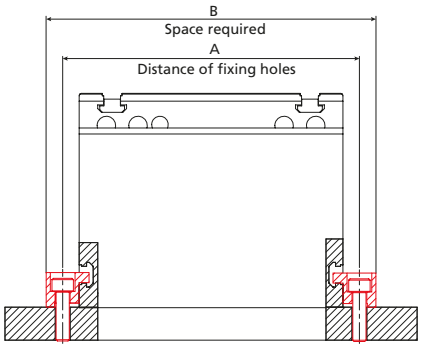


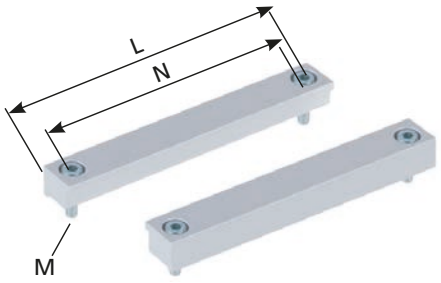


[mm]

| Code No. | Type | Fig. | A | B | L | M | N |
|---|---|---|---|---|---|---|---|
| 91819 | RK DuoLine 60 ground assembly | 1 | 72 | 91 | 57 | M6 | 40 |
| | RK DuoLine 60 crossing to 60 | 2 | | | | | |
| 91809 | RK DuoLine 80 ground assembly | 1 | 100 | 122 | 76 | M8 | 50 |
| | RK DuoLine 80 crossing to 80 | 2 | | | | | |

**Order instruction slot stones:**

- **Purchase only in lot sizes and a multiple of that, see product table below**

- Slot stones can be inserted and positioned at the guide profile and guide carriage

**Material:** Steel, nickel-plated or stainless steel

## Slot stones

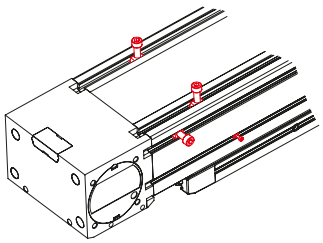

View of DuoLine from below

**Slot stone -B-**
can be swivelled into the slot

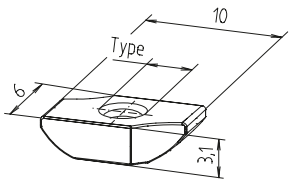


**Slot stone -N-**
can be slid into the slot

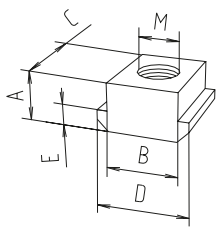


**Slot stone -P- Version K**
can be slid into the slot

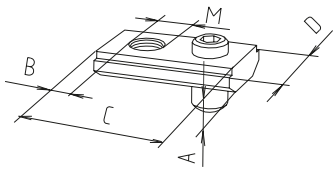


[mm]




| Code No. | Type | lot sizes | Material | Slot geometry | A | B | C | D | E | M | F [N] |
|---|---|---|---|---|---|---|---|---|---|---|---|
| **Slot stone -B-** | | | | | | | | | | | |
| E00017CSE | M3 | 10, 20, 30... pcs | Nickel-plated | 20 | | | | | | | |
| E00058CSE | M4 | 10, 20, 30... pcs | Nickel-plated | 20 | | | | | | | |
| **Slot stone -N-** | | | | | | | | | | | |
| 400B202 | M8 | – | Nickel-plated | 30 | 5 | 10 | 13 | 13 | 3 | M8 | 4000 |
| 40092021 | M8 | 10, 20, 30... pcs | Stainless steel | 30 | 5 | 10 | 13 | 13 | 3 | M8 | 4000 |
| **Slot stone -P- Version K** | | | | | | | | | | | |
| 4009214 | M5 | 10, 20, 30... pcs | Stainless steel | 30 | 4 | 7 | 20 | 12 | - | M5 | 5000 |
| 4009216 | M6 | 10, 20, 30... pcs | Stainless steel | 30 | 4 | 7 | 20 | 12 | - | M6 | 5000 |

## Motor adapter kit for RK AC servomotors

- Servomotors from the RK standard range can be easily connected
- Complete motor adapter kits manufactured to your specifications on request

**Scope of delivery:**
Motor adapter kit, elastomer coupling and fixation material



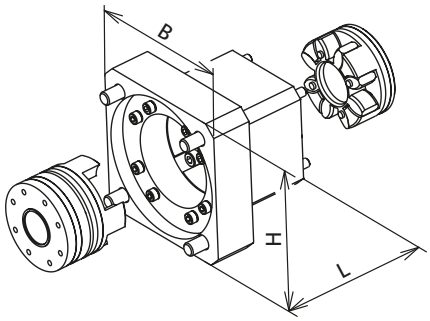


| Type | Servo motors without gearbox | | |
|---|---|---|---|
| | RK-AC 118 | RK-AC 240 | RK-AC 470 |
| DuoLine S 60 Clean | 949465 | 949466 | – |
| DuoLine S 80 Clean | – | 949468 | 949469 |

| Type | Servo motors with gearbox | | |
|---|---|---|---|
| | RK-AC 112 | RK-AC 260<br>RK-AC 280 | RK-AC 345 |
| DuoLine S 60 Clean | 949467 | – | – |
| DuoLine S 80 Clean | 949470 | 949471 | – |

## External inductive limit switch

- External fixation on the guide profilev

**Scope of delivery:**
Limit switch with set of fixing items

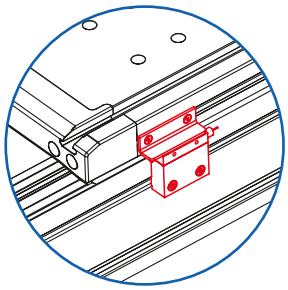

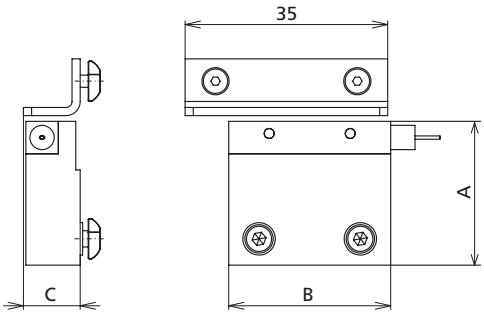


| Limit switch | external |
|---|---|
| Voltage | 10...30 VDC |
| Max. switching current | 100 mA |
| Operating frequency | max. 5 kHz |
| Mechanical lifetime | independent of operating cycles |
| Operating distance | 1,5 mm |
| Degree of protection | IP 67 |
| Cable length | 5 m |
| Ambient temperature | -25°C to +70°C |

| Code No. | Type | A | B | C | Version |
|---|---|---|---|---|---|
| 92839 | RK DuoLine 60 Clean | 52,8 | 25 | 10 | NO, Internal inductive limit switch |
| 92821 | RK DuoLine 80 Clean | 71,5 | 25 | 10 | |

# Heavy duty cylinder – LZ 70/80 FL/PL

## The new generation of industrial linear cylinders

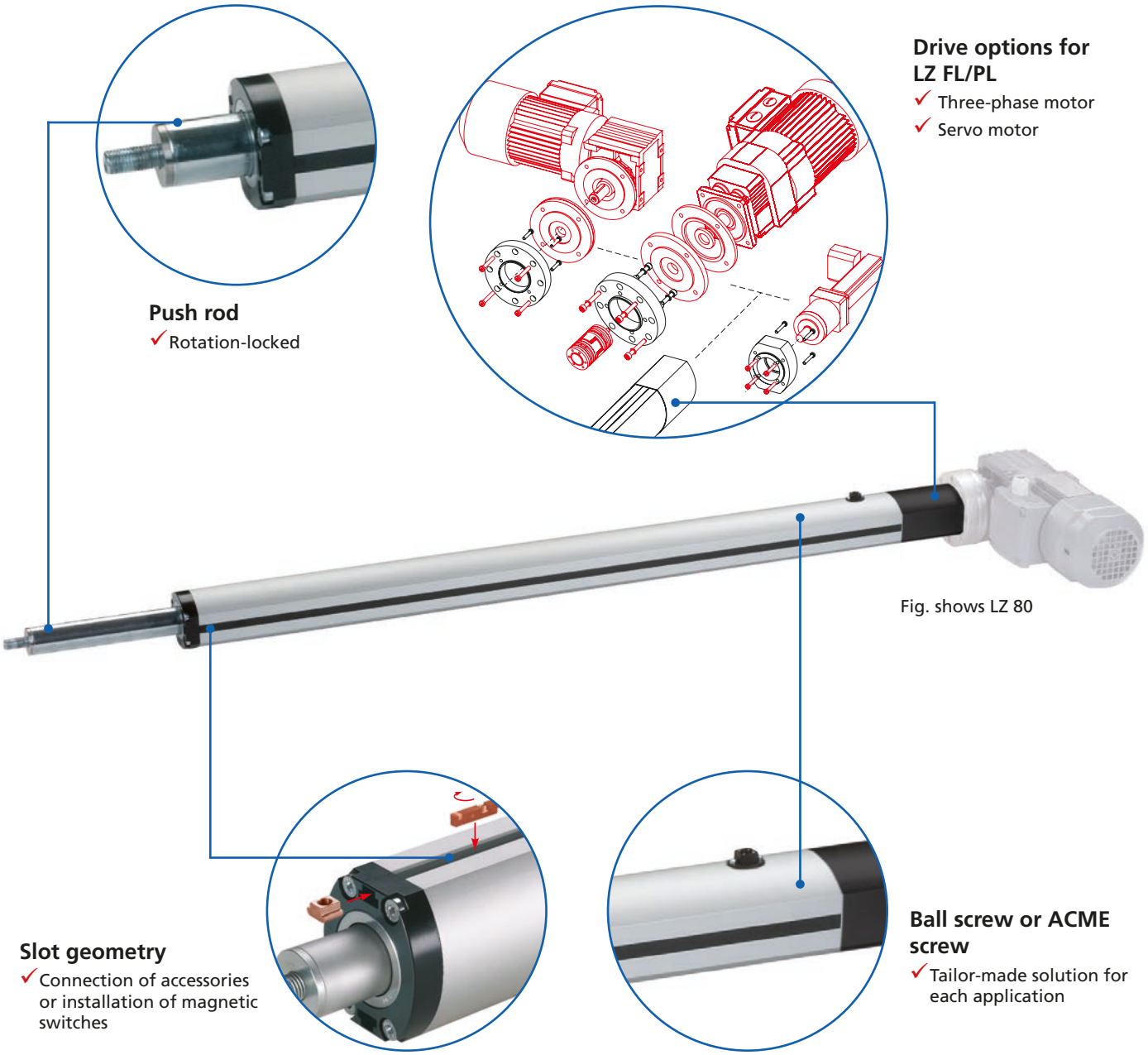

**Push rod**
✓ Rotation-locked

**Drive options for LZ FL/PL**
✓ Three-phase motor
✓ Servo motor

Fig. shows LZ 80

**Slot geometry**
✓ Connection of accessories or installation of magnetic switches

**Ball screw or ACME screw**
✓ Tailor-made solution for each application

### Features:

- Selectable drive (3-phase motor/servo motor)
- Flexible use of space due to different motor assembly options
- Coverable slot geometry on both sides supports a range of fixing options
- Push rod rotation locked
- Maintenance-free for up to 400 operating hours (with ball screws)
- Service life of up to 1 million double strokes (500 mm travel)
- Protection class IP 54
- Integrated magnets for external magnetic switches

### Options:

- Optional IP 65 can be supplied
- Special stroke lengths available on request
- External magnetic switches
- Angular 3-phase motor with fixing boss available on request

# LZ electric cylinders - Table of contents


## Properties/performance data

- General information/operating conditions ... 490
- Power diagram LZ 70 ... 490
- Power diagram LZ 80 ... 492

## Versions
**(Dimensions, order numbers)**

- LZ 70 FL/PL electric cylinder ... 494 - 495
- LZ 80 FL/PL electric cylinder ... 494 - 495

## Accessories

**Fixing**

- Clevis ... 498
- Bearing block for Clevis ... 498
- Swivel head ... 498
- Fork attachment for Swivel head ... 499
- Swivel ... 499
- Bearing block for Swivel ... 499
- Trunnion mounting set ... 500
- Support blocks for trunnion mounting ... 500
- Slot stone ... 500
- Axial adjustment – RK SyncFlex A ... 501

**Drive**

- Motor adaptor kit ... 502

**Position determination**

- Magnetic switch ... 503

# LZ 70/80 FL/PL – Versions

## Linear cylinder with ball screw for precision positioning applications (Control-Tec)

| Type | LZ 70 FL / LZ 70 P FL | LZ 70 PL / LZ 70 P PL | LZ 80 FL | LZ 80 PL |
|---|---|---|---|---|
| Max. compressive force / tensile force | 1.500 N | 5.000 N | 3.000 N | 6.200 N |
| Max. driving torque | 15 Nm | 15 Nm | 20 Nm | 20 Nm |
| Max. speed | 1.000 mm/s | 500 mm/s | 288 mm/s | 28 mm/s |
| Max. acceleration | 10 m/s² / 5 m/s² | 10 m/s² / 5 m/s² | 10 m/s² | 10 m/s² |
| Repeatability | ± 0.05 mm | ± 0.05 mm | ± 0.05 mm | ± 0.05 mm |
| Max. no-load torque | 0.3 / 0.54 Nm | 0.3 / 0.54 Nm | - | - |
| Drive | Ball screw KG 20x20 | Ball screw KG 20x10 | Ball screw KG 20x50 | Ball screw KG 20x5 |
| Lead accuracy | T7 (±0.052mm / 300 mm) | | | |
| Duty cycle | S3 100 % | S3 100 % | S3 100 % | S3 100 % |
| Ambient temperature | +0°C to +60°C | +0°C to +60°C | +5°C to +40°C | +5°C to +40°C |
| Degree of protection | IP 54 (optional IP 65) | IP 54 (optional IP 65) | IP 54 | IP 54 |
| Continuous sound pressure level | ≤ 75 dB (A) | ≤ 75 dB (A) | ≤ 70 dB (A) | ≤ 70 dB (A) |

## Speed/Force diagram – LZ 70

For stroke lengths >600 mm, see diagram "Critical speed"

### LZ 70 with ball screw KG 20x10

At 5000N and Stroke >800 mm see Diagram „Maximal Load" (page 491).

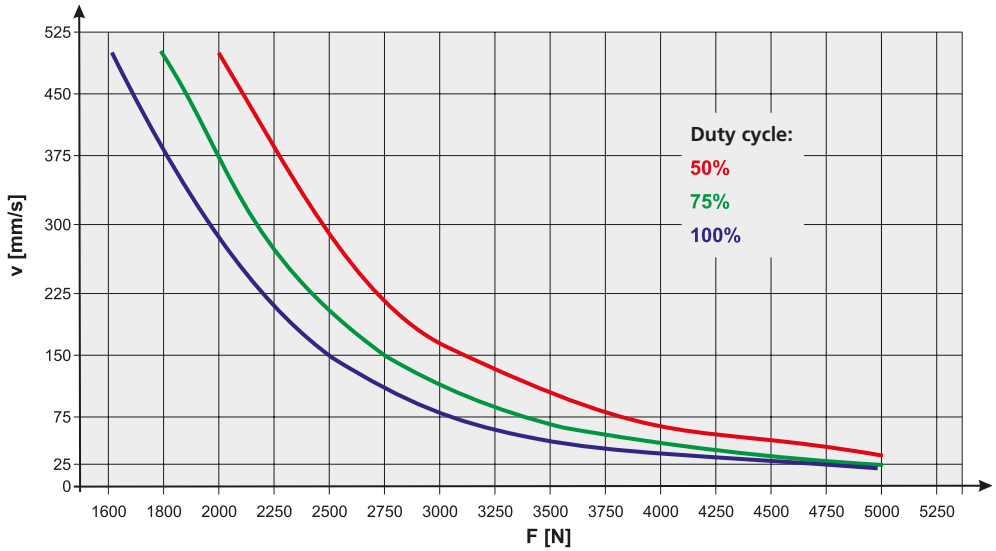


### LZ 70 with ball screw KG 20x20

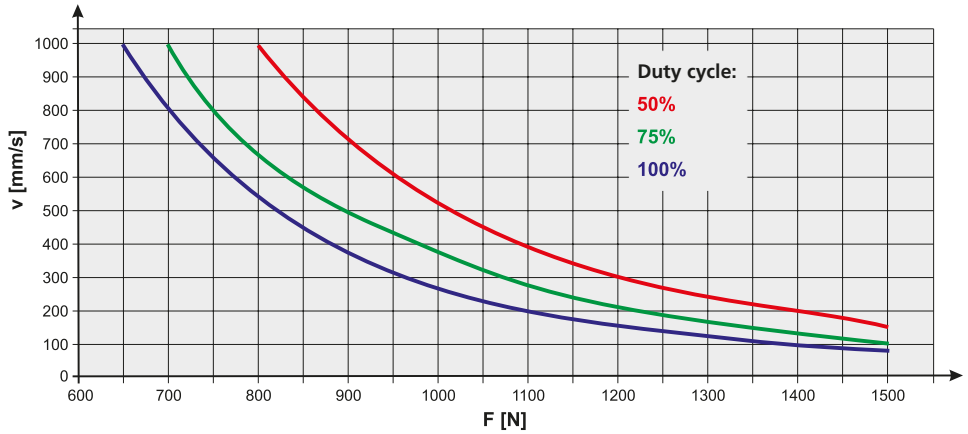

## Critical speed, Speed/Stroke diagram for KG 20x10 / KG 20x20

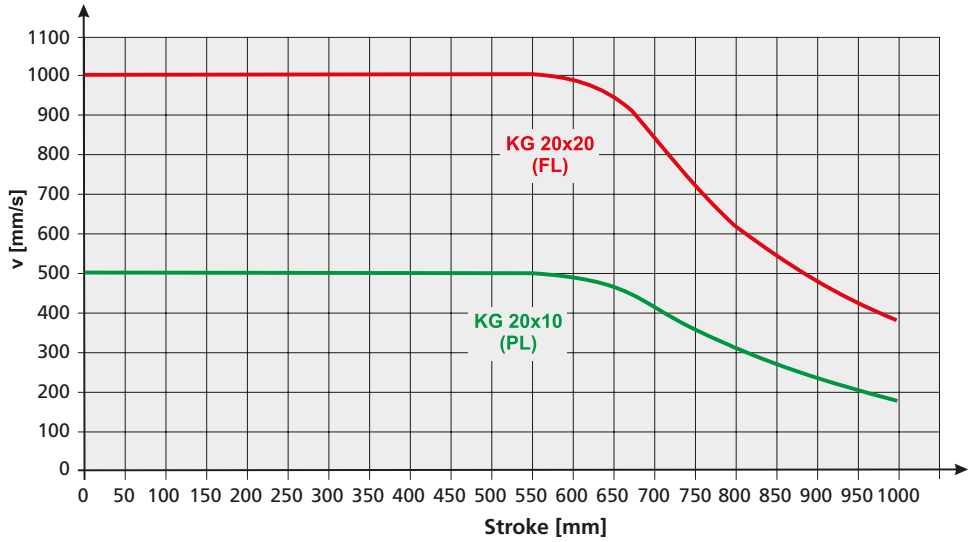


## Maximal Load, Force/Stroke diagram for KG 20x10

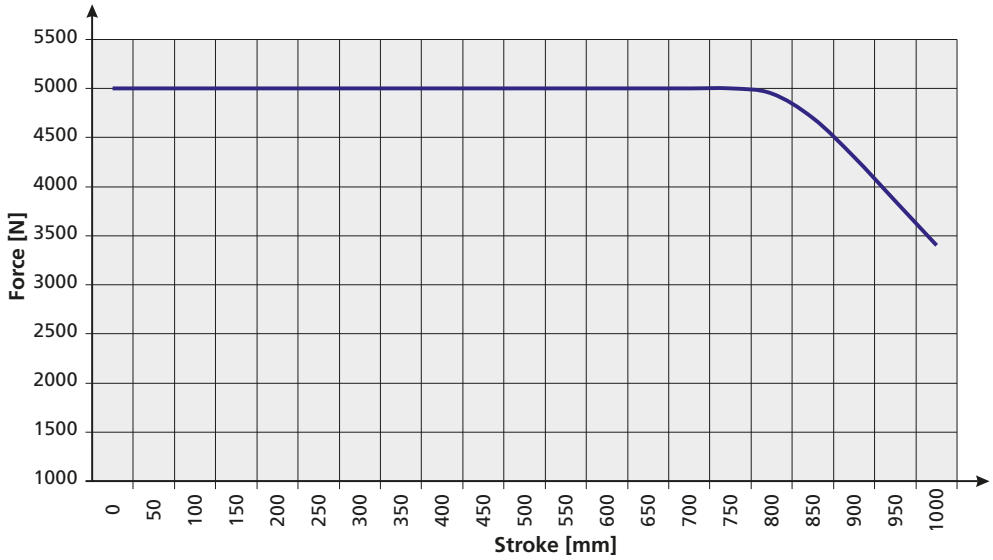


## Durability, Force/Path diagram for KG-20x10/KG-20x20

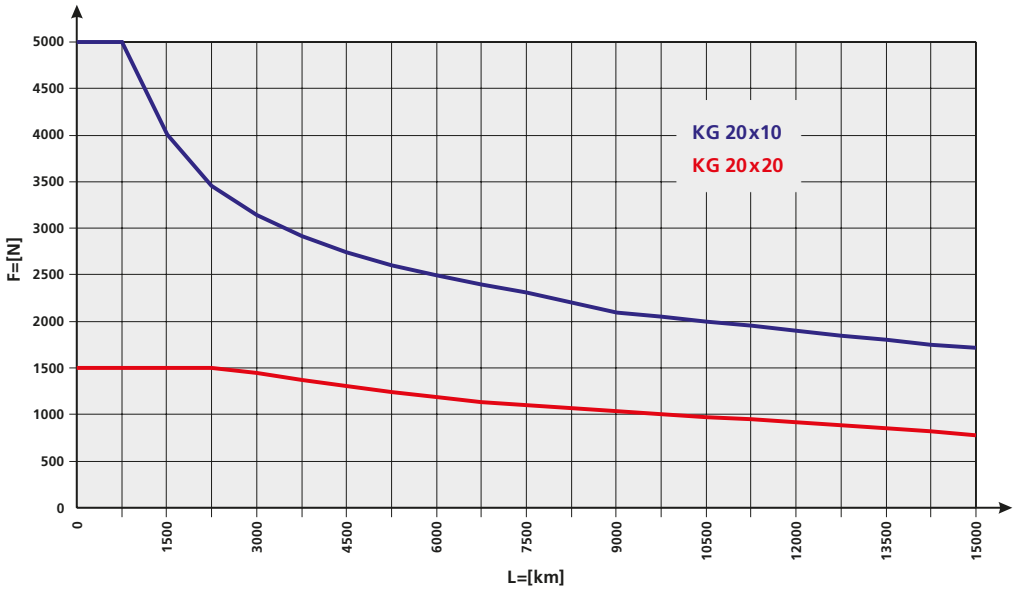

## Speed/Force diagram – LZ 80

**LZ80 with ball screw KG 20x5**

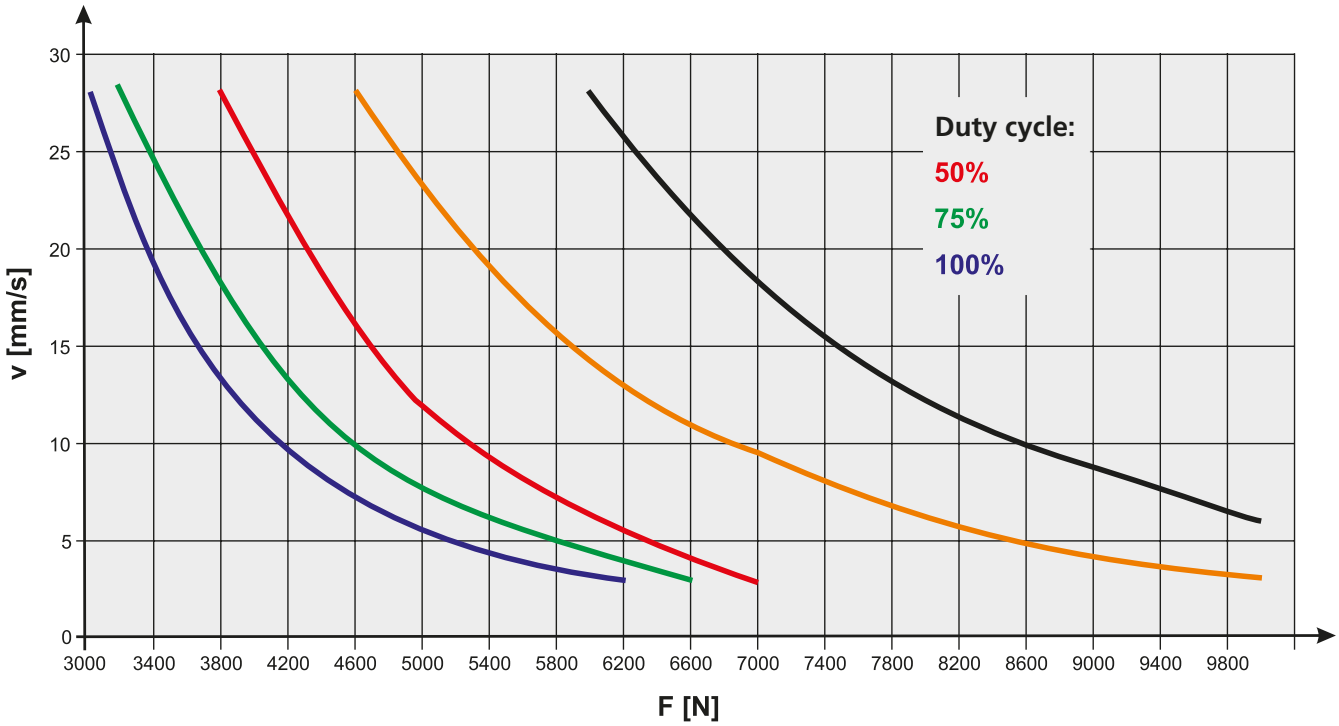


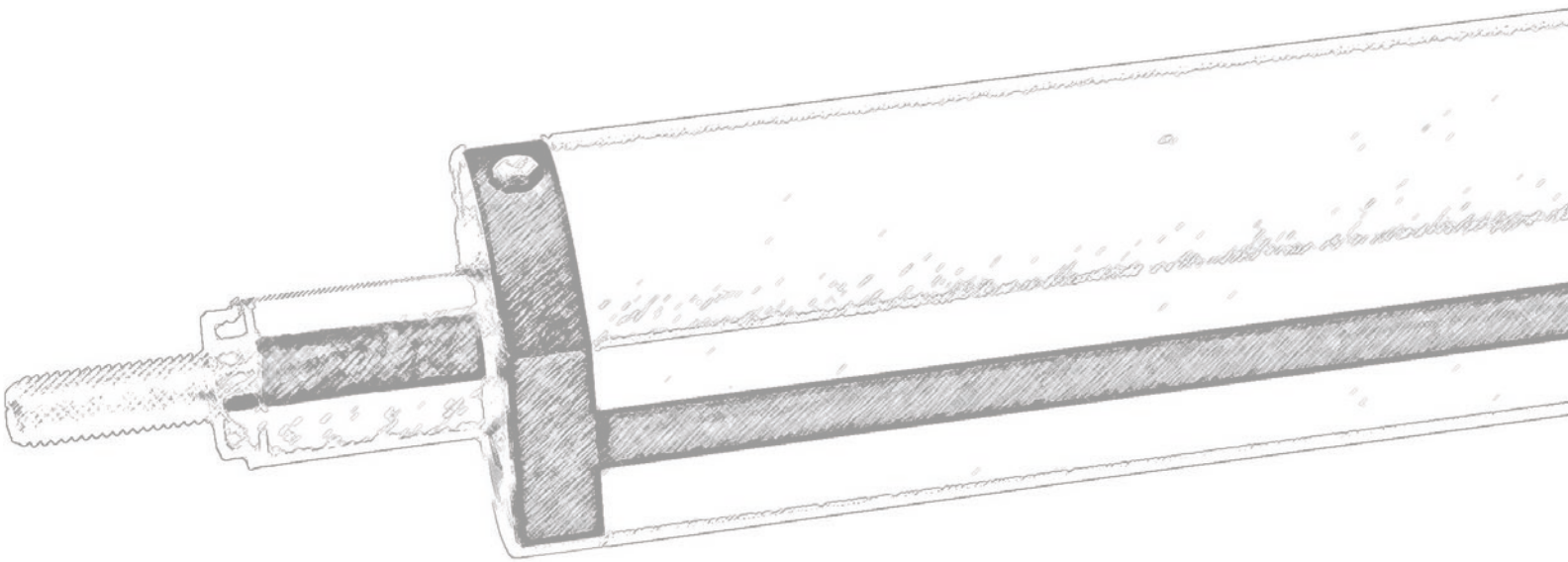

**LZ80 with ball screw KG 20x50**

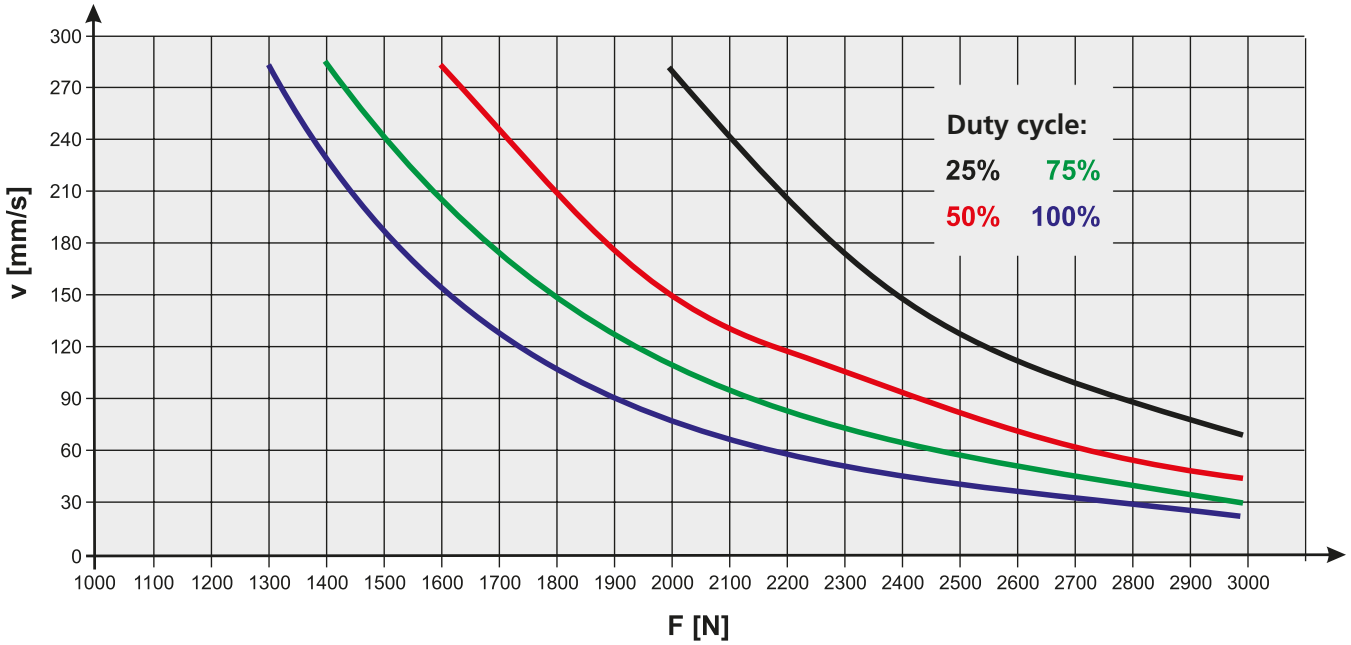


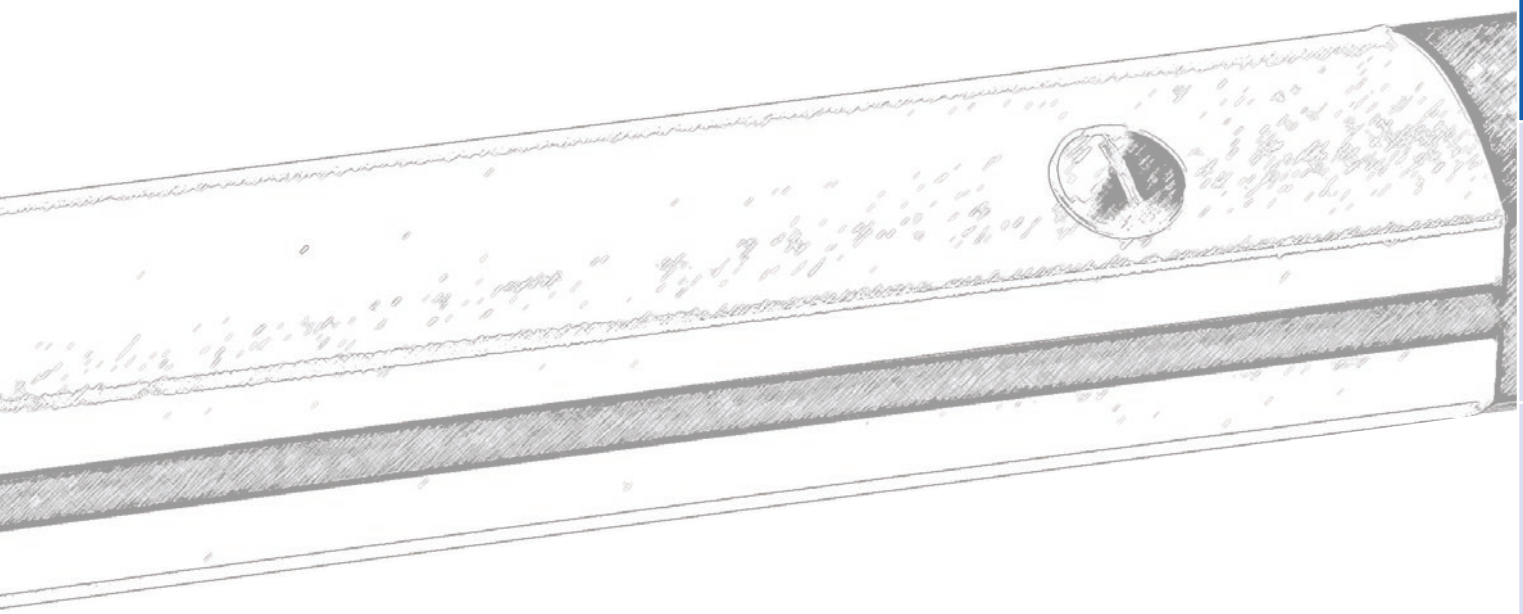

**Order information:**

- Maintenance opening of the LZ 70 can be moved on request

## LZ FL/PL electric cylinder with ball screw
## Control-Tec




Fig. shows LZ 70

| Code No. | Type | Spindle | A | B | C | D |
|---|---|---|---|---|---|---|
| TQ1_A2A1D35AA_ _ _ _ | LZ 70 PL | KG 20x10 | 69 | 77 | 44 | 47.6 |
| TQ1_A2A1D36AA_ _ _ _ | LZ 70 FL | KG 20x20 | 69 | 77 | 44 | 47.6 |

**Stroke [mm]** freely configurable
e.g. 0 3 9 7

**Degree of protection LZ PL:**
1 = IP 54
3 = IP 65

**Degree of protection LZ FL:**
2 = IP 54
4 = IP 65

| Travel | Installation dimension X | Weight [kg] | |
|---|---|---|---|
| | | Basic length | per 100 mm travel |
| 1 to 397 mm | Stroke + 302 mm | 3.0 | 0.7 |
| 398 to 600 mm | Stroke + 339.5 mm | 3.0 | 0.7 |
| 601 to 795 mm | Stroke + 377 mm | 3.0 | 0.7 |
| 796 to 1000 mm | Stroke + 407 mm | 3.0 | 0.7 |

| Code No. | Type | Spindle | A | B | C | D |
|---|---|---|---|---|---|---|
| TQ1_A1A1B12AA_ _ _ _ | LZ 80 PL | KG 20x5 | 80 | 91 | 55 | 48 |
| TQ1_A1A1B13AA_ _ _ _ | LZ 80 FL | KG 20x50 | 80 | 91 | 55 | 48 |

**Stroke [mm]** configurable in 7.5 mm increments
e.g. 0 3 9 7 . 5

**Degree of protection LZ PL:**
1 = IP 54
3 = IP 65

**Degree of protection LZ FL:**
2 = IP 54
4 = IP 65

| Travel | Installation dimension X | Weight [kg] | |
|---|---|---|---|
| | | Basic length | per 100 mm travel |
| 7.5 to 397.5 mm | Stroke + 348.5 mm | 6.5 | 1 |
| 405 to 600 mm | Stroke + 386 mm | 6.5 | 1 |
| 607.5 to 795 mm | Stroke + 423.5 mm | 6.5 | 1 |
| 802.5 to 1005 mm | Stroke + 468.5 mm | 6.5 | 1 |

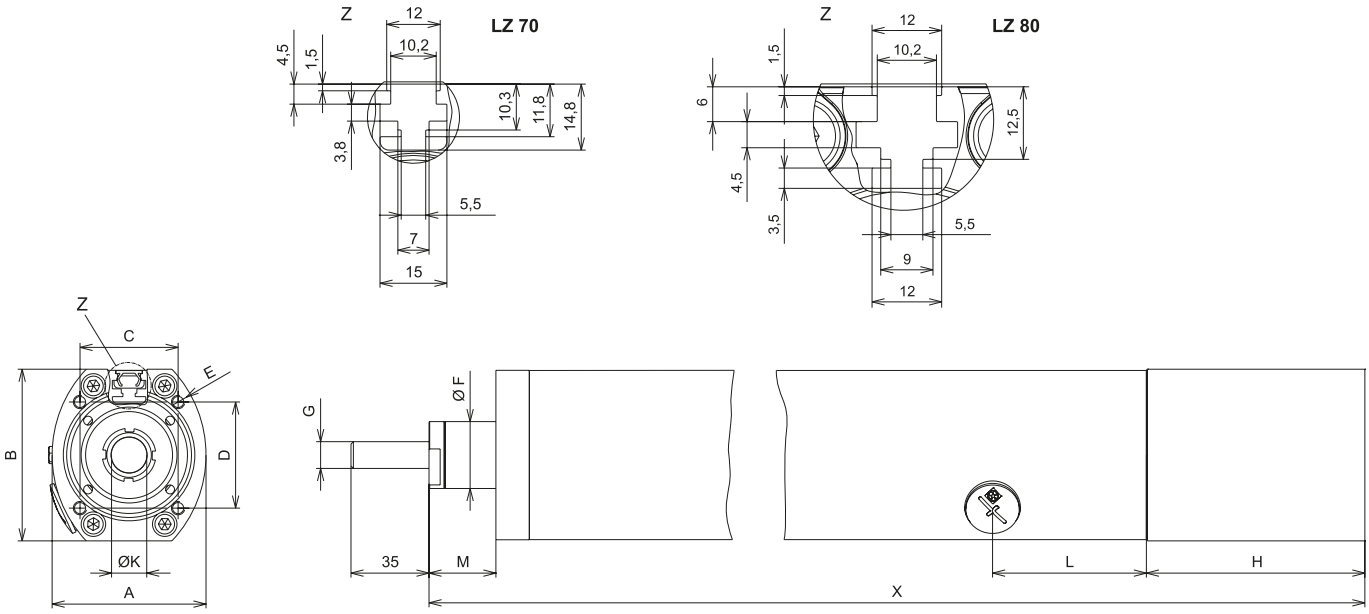


[mm]

| E | F | G | H | K | L | M |
|---|---|---|---|---|---|---|
| M6 | 30 | M12 | 98 | 12 | 69 | 30 |
| M6 | 30 | M12 | 98 | 12 | 69 | 30 |

[mm]

| E | F | G | H | K | L | M |
|---|---|---|---|---|---|---|
| M6 | 40 | M16 | 110 | 15 | Stroke-33 (slot) | 28.2 |
| M6 | 40 | M16 | 110 | 15 | Stroke-33 (slot) | 28.2 |

**Order information:**

- Position for maintenance point for LZ 70 P upon request

## LZ P FL/PL electric cylinder with ball screw Control-Tec



Fig. shows LZ 70 P incl. Motor adapter

| Code No. | Type | Spindle | A | B | C | D |
|---|---|---|---|---|---|---|
| TQ1_A2B1D35AA_ _ _ _ | LZ 70 P PL | KG 20x10 | 69 | 77 | 82 | 100 |
| TQ1_A2B1D36AA_ _ _ _ | LZ 70 P FL | KG 20x20 | 69 | 77 | 82 | 100 |

**Stroke [mm]** freely configurable
e.g. 0 3 9 7

**Degree of protection LZ P PL:**
1 = IP 54
3 = IP 65

**Degree of protection LZ P FL:**
2 = IP 54
4 = IP 65

| Travel | Installation dimension X | Weight [kg] | |
|---|---|---|---|
| | | Basic length | per 100 mm travel |
| 1 to 397 mm | Stroke + 288,5 mm | 5 | 0,7 |
| 398 to 600 mm | Stroke + 326 mm | 5 | 0,7 |
| 601 to 795 mm | Stroke + 363,5 mm | 5 | 0,7 |
| 796 to 1000 mm | Stroke + 393,5 mm | 5 | 0,7 |

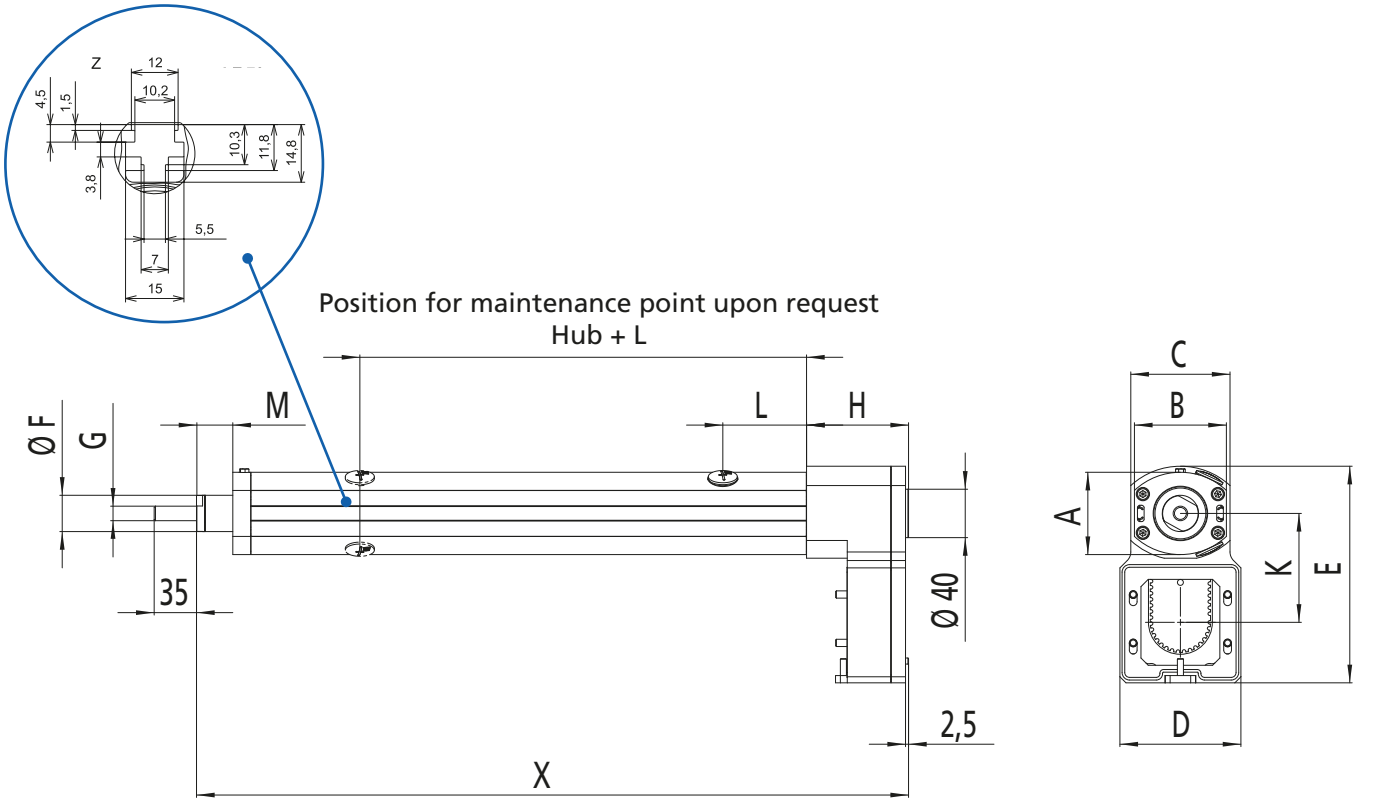


[mm]

| E | F | G | H | K | L | M |
|---|---|---|---|---|---|---|
| 179 | 30 | M12 | 84,5 | 90 | 69 | 30 |
| 179 | 30 | M12 | 84,5 | 90 | 69 | 30 |

## Clevis

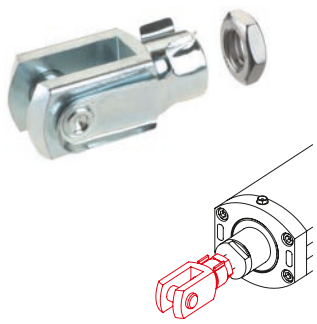

Clevis M12 for LZ 70

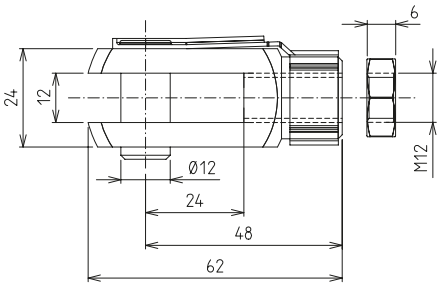


Clevis M12 for LZ 80

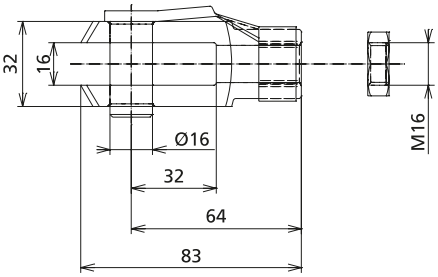


| Code No. | Type | |
|---|---|---|
| QZD050570 | LZ 70 | Clevis M12 |
| QZD050571 | LZ 80 | Clevis M16 |

## Bearing block for Clevis

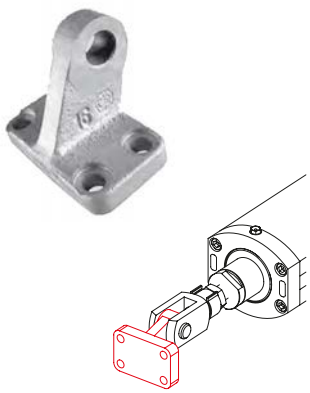

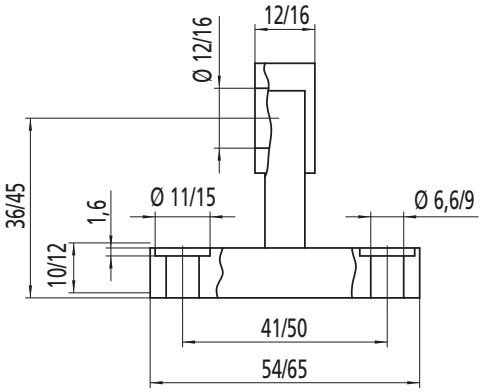


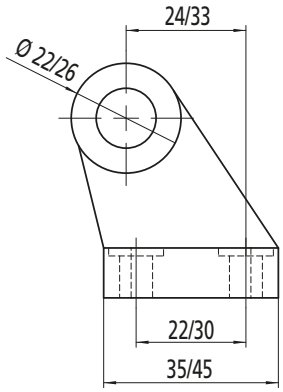


| Code No. | Type | |
|---|---|---|
| QZD050572 | LZ 70 | Bearing block Ø12 |
| QZD050573 | LZ 80 | Bearing block Ø16 |

## Swivel head

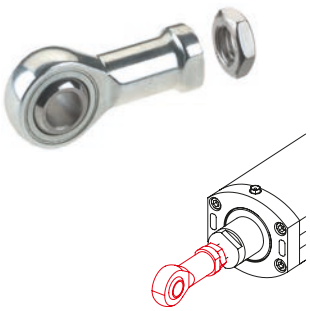

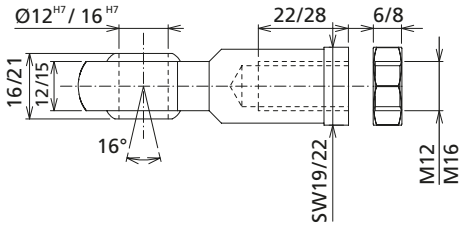


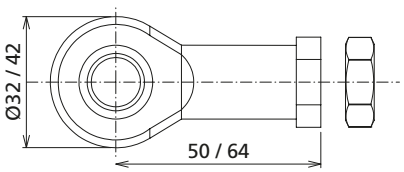


| Code No. | Type | |
|---|---|---|
| QZD050574 | LZ 70 | Swivel head M12 |
| QZD050575 | LZ 80 | Swivel head M16 |

## Fork attachment for Swivel head



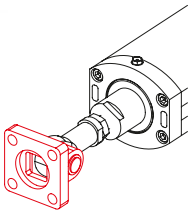

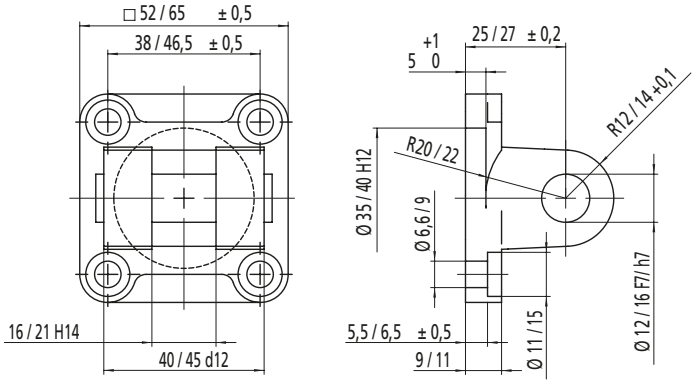


| Code No. | Type | |
|---|---|---|
| QZD050576 | LZ 70 | Fork attachment Ø 12 |
| QZD050577 | LZ 80 | Fork attachment Ø 16 |

## Swivel



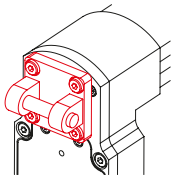

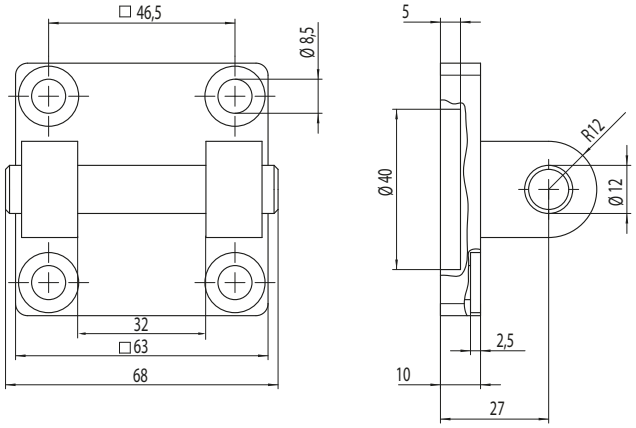


| Code No. | Type | |
|---|---|---|
| QZD050579 | LZ 70 | Swivel Ø 12 |

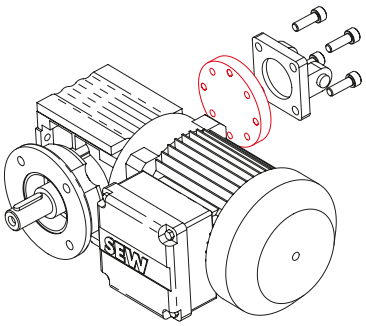


For use with SEW spiro plan geared motor one of following adaptor plates is needed

| Code No. | Type | |
|---|---|---|
| QZD050581 | LZ 70 | Adaptor plates SEW WF 20 |
| QZD050582 | LZ 70 | Adaptor plates SEW WF 30 |

## Bearing block for Swivel



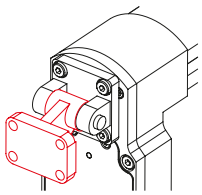

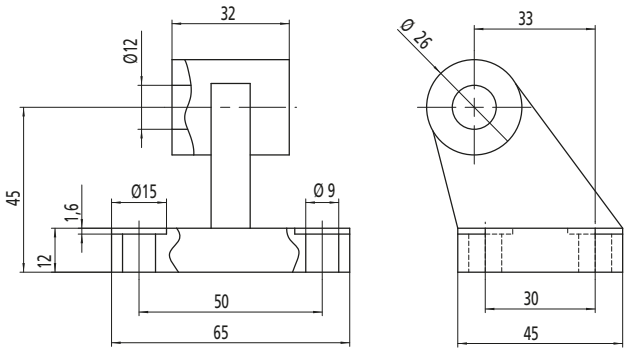


| Code No. | Type | |
|---|---|---|
| QZD050584 | LZ 70 | Bearing block wide Ø 12 |

## Trunnion mounting set



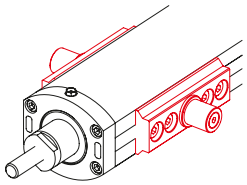

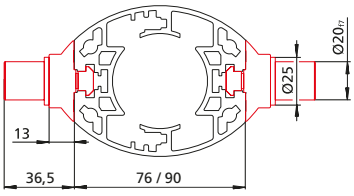


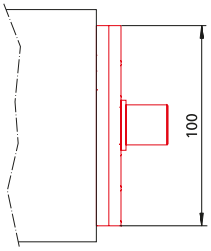


| Code No. | Type |
|---|---|
| QZD050587 | Trunnion mounting set LZ 70 |
| QZD050588 | Trunnion mounting set LZ 80 |

## Support blocks for trunnion mounting



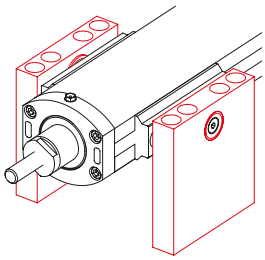

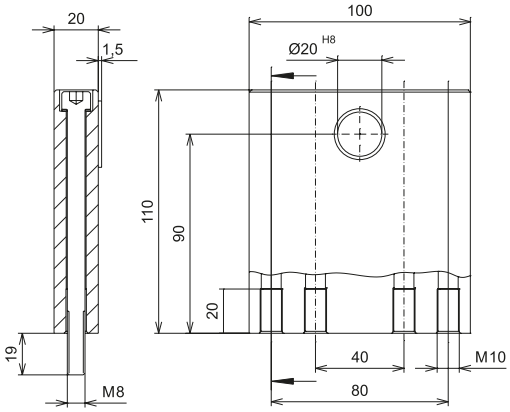


| Code No. | Type |
|---|---|
| QZD050589 | Support blocks LZ 70/80 |

**Order instruction square nut:**

- **Purchase only in lot sizes and a multiple of that, see product table below**

- Slot stones facilitate the attachment of fittings to the cylinder.
- They can be slid into the lateral slots (Type -N-) or swivelled into the slot from above (Type -R-).

## Slot stone



Type -N-



Type -R-

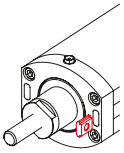

| Code No. | Type | | lot sizes | F [N] |
|---|---|---|---|---|
| 4006201 | LZ 70 | Slot stone -N- M5 | 10, 20, 30... pcs | 4.000 |
| 4006203 | | Slot stone -N- M6 | 10, 20, 30... pcs | 4.000 |
| 4026207 | LZ 80 | Slot stone -N- M5 | 10, 20, 30... pcs | 4.000 |
| 4026203 | | Slot stone -N- M6 | 10, 20, 30... pcs | 9.000 |
| 4026206 | | Slot stone -N- M8 | 10, 20, 30... pcs | 9.000 |
| 4026221 | | Slot stone -R- M6 | 10, 20, 30... pcs | 8.000 |
| 4026222 | | Slot stone -R- M8 | 10, 20, 30... pcs | 8.000 |

## RK SyncFlex A – axial adjustment for LZ 70



**Levelling eye**
✓ Eliminates distortions

**Axial adjustment**
✓ Compensates manufacturing tolerances
✓ Compensates installation tolerances
✓ Length compensation -2 mm
✓ Reduces commissioning times

**Scope of delivery:**
Axial adjustment, incl. swivel head as depicted

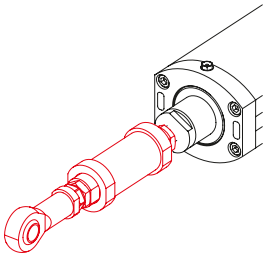

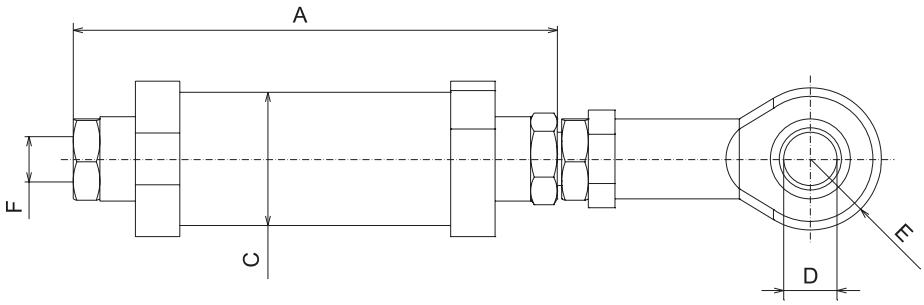




**Note:**
Screw depth 15 mm max.

[mm]

| Code No. | Load | A | C | D | E | F |
|---|---|---|---|---|---|---|
| QZD050590 | 600 N | 102 | Ø30 | Ø12 | R16 | M12 |
| QZD050591 | 1,000 N | 102 | | | | |
| QZD050592 | 2,000 N | 103,5 | | | | |
| QZD050593 | 2,500 N | 109 | | | | |
| QZD050594 | 3,000 N | 107,5 | | | | |
| QZD050595 | 4,000 N | 139,5 | | | | |
| QZD050596 | 5,000 N | 137 | | | | |

## Motor adaptor kit for 3 phase and servo motors

- Servomotors from the RK standard range can be easily connected
- Complete motor adaptor kits manufactured to your specifications on request
- Motor adaptors offer degree of protection IP 54 (IP 65 available on request)

**Scope of delivery:**
Motor adaptor, elastomer coupling and fastenings

### 3 phase motor

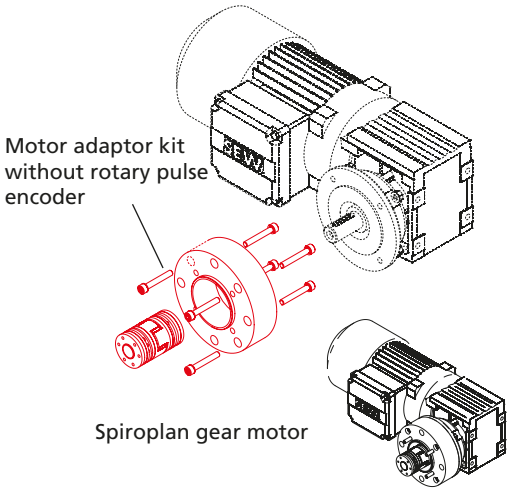


| Code No. | Type | Version |
|---|---|---|
| LZ 70 for 3 phase motor | | |
| 949088 | SEW WF20DR63L2 | with gear |
| | SEW WF20DR63M2 | with gear |
| | SEW WF20DR63S2 | with gear |
| | SEW WF30DRS71M2 | with gear |

| Code No. | Type | Version |
|---|---|---|
| LZ 80 for 3 phase motor | | |
| 949089 | SEW WF20DR63L2 | with gear |
| | SEW WF20DR63M2 | with gear |
| | SEW WF20DR63M4 | with gear |
| | SEW WF30DRS71M2 | with gear |
| | SEW WF30DRS71S4 | with gear |
| | SEW WF30DRS80S2 | with gear |
| 949090 | SEW WF20DR63L2 | with gear and rotary pulse encoder |
| | SEW WF20DR63M2 | with gear and rotary pulse encoder |
| | SEW WF20DR63M4 | with gear and rotary pulse encoder |
| | SEW WF30DRS71M2 | with gear and rotary pulse encoder |
| | SEW WF30DRS71S4 | with gear and rotary pulse encoder |
| | SEW WF30DRS80S2 | with gear and rotary pulse encoder |

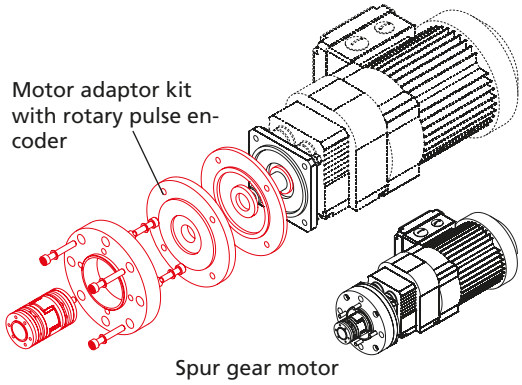


Note: Motor adaptor fits all SEW flanges Ø120 with shaft Ø20x40.

### Servo motor

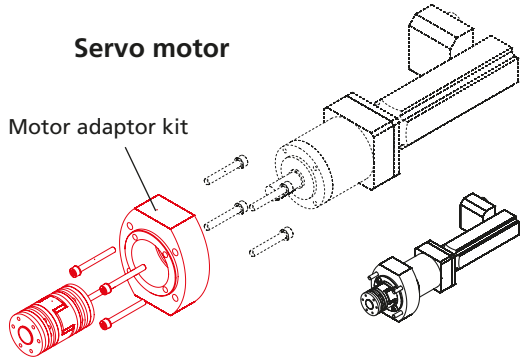


| Code No. | Type | Version |
|---|---|---|
| LZ 70 for servo motor | | |
| 949091 | RK-AC 112 | with PLE 60 gear |
| 949092 | RK-AC 118 | without gear |
| 949093 | RK-AC 240 | without gear |
| 949094 | RK-AC 260 / 280 | with PLE 80 gear |
| 949095 | RK-AC 470 | without gear |

| Code No. | Type | Version |
|---|---|---|
| LZ 80 for servo motor | | |
| 949096 | RK-AC 112 | with PLE 60 gear |

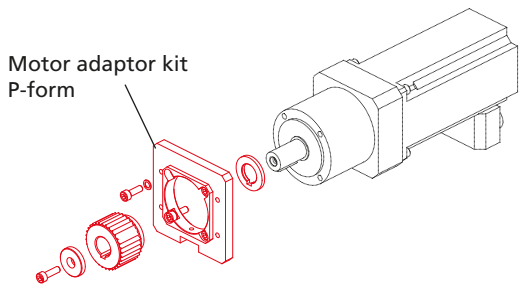


| Code No. | Type | Version |
|---|---|---|
| LZ 70 P for servo motor | | |
| 949994 | RK-AC 260 | with PLE 80 gear |
| 949995 | RK-AC 345/470 | without gear |

## Magnetic switch

- Signals from the magnetic switch can be collected and evaluated by a customer-provided control unit (such as a PLC).
- The switch can be retrofitted in the lateral slot (protected by a cover profile as standard)
- Magnets are already integrated within the cylinder as standard.



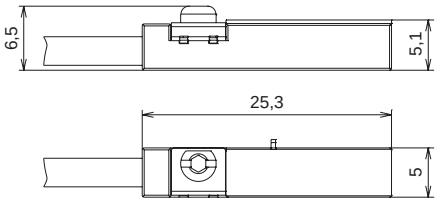


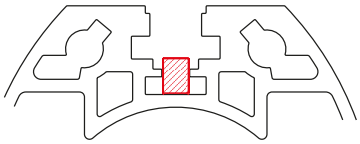

Magnetic switch

### Magnetic switch – Technical data

Extension for magnetic switch

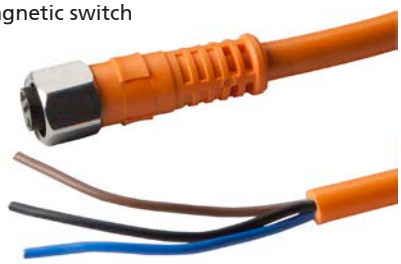

| | NC contact |
|---|---|
| Voltage | 10-30 V DC |
| Current consumption | < 10 mA |
| Output current | Max. 100 mA |
| Output type | PNP |
| Function indication | LED |
| Ambient temperature | -20°C to +70°C |
| Degree of protection | IP 67 |

| Code No. | Type |
|---|---|
| QZD050602 | Magnetic switch, NC contact, incl. extension for magnetic switch, cable length 5,3 m |

LZ 70 with swivel head and trunnion



# Heavy duty cylinder – SLZ 90

## The powerful linear cylinder for precise positioning tasks up to 25,000 N

SLZ 90 S
with pivot bearing
foot, motor inline



SLZ 90 P
with pivot bearing
foot, motor parallel

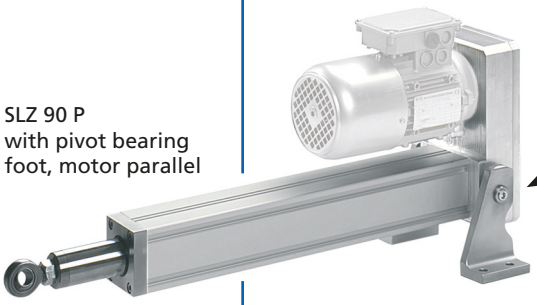

SLZ 90 W
with pivot bearing
foot, motor rightangle





**SLZ 90 version with fixing boss**



**SLZ 90 version with pivot bearing foot**



**Drive options for SLZ 90**

- ✓ 3-phase motor
- ✓ Servo motor

### Features:

- Choice of drives (3-phase motor/servo motor)
- Flexible use of space due to different motor configurations
- Forces up to 25,000 N
- Speeds up to 933 mm/s
- 100% duty cycle
- Coverable slot geometry on both sides supports a range of fixing options for attachments
- Push rod with rotation locking
- Travel up to 2000 mm
- Maintenance-free for entire lifetime of unit
- IP 54
- Internal magnets for external magnetic switches

### Options:

- Optional IP 65 can be supplied
- Servo motors and controls available on request
- Special stroke lengths available on request
- Motor brake

# SLZ 90 Electric cylinder - Table of contents


## Properties/Technical data

- General information/operating conditions ... 506

## Versions
(Dimensions, order numbers)

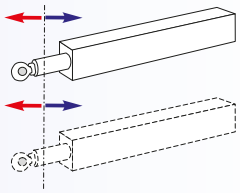

- SLZ 90 electric cylinder with pivot bearing foot and fixing boss:

SLZ 90 S ..... 508 - 509

SLZ 90 P ..... 510 - 512

SLZ 90 W ..... 514 - 516

## Accessories

**Fixing**

- Slot stone -R- ..... 517

**Position determination**

- Magnetic switch ..... 517

# SLZ 90 – Technical data

## General information/operating conditions

| Type | SLZ 90 with ball screw for precise positioning/control | | |
|---|---|---|---|
| | SLZ 90 S | SLZ 90 P | SLZ 90 W |
| Compressive force/tensile force | 25,000 N | 25,000 N | 25,000 N |
| Self-locking (via motor brake) | 25,000 N | 25,000 N | 25,000 N |
| Max. speed | 933 mm/s | 933 mm/s | 126 mm/s |
| Design | Linear cylinder with ball screw 25 x 5, 25 x 10, 25 x 25, 32 x 5, 32 x 10, 32 x 40 | | |
| Guide | Double bearing provided by slide bushes | | |
| Installation position | Any position, without shear forces | | |
| Ambient temperature | -20°C to +70°C | | |
| Repeatability | ± 0.05 mm | | |
| Duty cycle (at max. load) | 100% | | |
| Voltage | 230/400 V AC | | |
| Current consumption (max. starting current) | depending on motor selection | | |
| Power input | depending on motor selection, up to 1.5 KW | | |
| Protection class | IP 54 (optional IP 65) | | |

The data refers to a three-phase motor 230/400 V AC, 50 Hz;
different performance data available on request.

## Connecting slots - guide profile



Slot for magnetic switch, see page 517



Slot for accessory attachment
(30 BLOCAN® slot geometry)

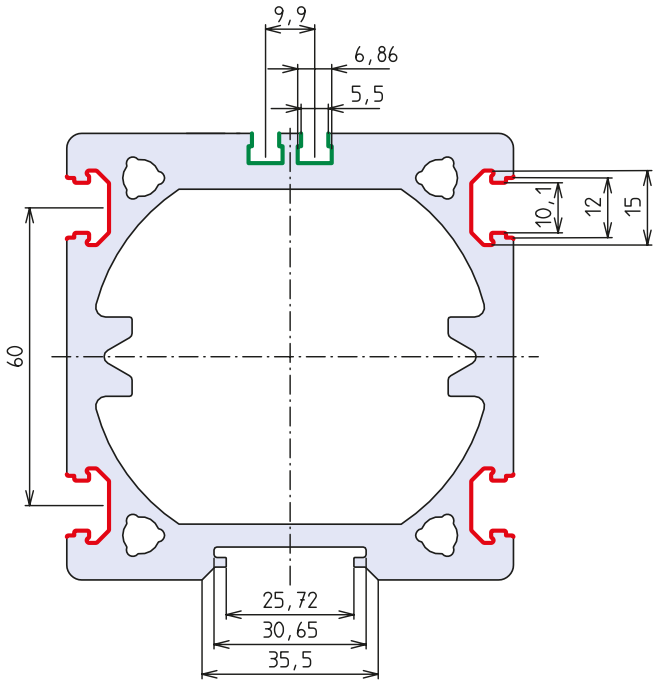



Adjustment of maintenance platform via SLZ 90 heavy duty cylinders.

# SLZ 90 S – Versions

**Order information:**

- Longer stroke lengths on request
- Other performance data and motors available on request

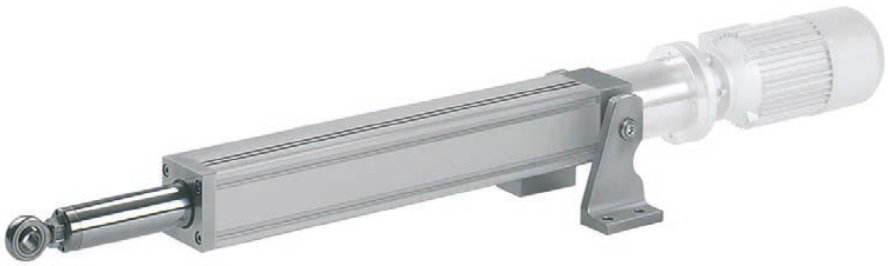

## SLZ 90 S versions with ball screw

| Code No. | Type | Max. force F [N] | Max. speed [mm/s] | Max. stroke [mm] | Output [kW] | Motor selection with motor brake |
|---|---|---|---|---|---|---|
| **Ball screw 32 x 5** | | | | | | |
| TQ21A1S21_6_A_ _ _ _ | SLZ 90 S | 8,000 | 116 | 1,000 | 1.5 | DRN90L4/BE2/FT |
| TQ21A1S24_6_A_ _ _ _ | SLZ 90 S | 18,000 | 26 | 1,300 | 0.75 | RF17DRN80M4/BE1 |
| **Ball screw 32 x 10** | | | | | | |
| TQ21A1S21_7_A_ _ _ _ | SLZ 90 S | 3,500 | 233 | 1,000 | 1.5 | DRN90L4/BE2/FT |
| TQ21A1S25_7_A_ _ _ _ | SLZ 90 S | 25,000 | 17 | 1,100 | 0.55 | RF17DRS71M4/BE1 |
| **Ball screw 32 x 40** | | | | | | |
| TQ21A1S21_8_A_ _ _ _ | SLZ 90 S | 1,000 | 933 | 900 | 1.5 | DRN90L4/BE2/FT |

Stroke length

Installation position of terminal box

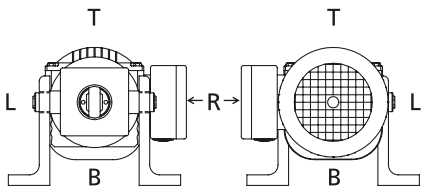


All diagrams show the terminal box in the R position

1 = M1
2 = M2
3 = M3
4 = M4
5 = M5
6 = M6

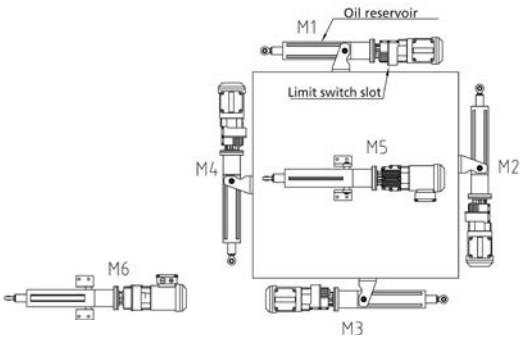

## Version with pivot bearing feet

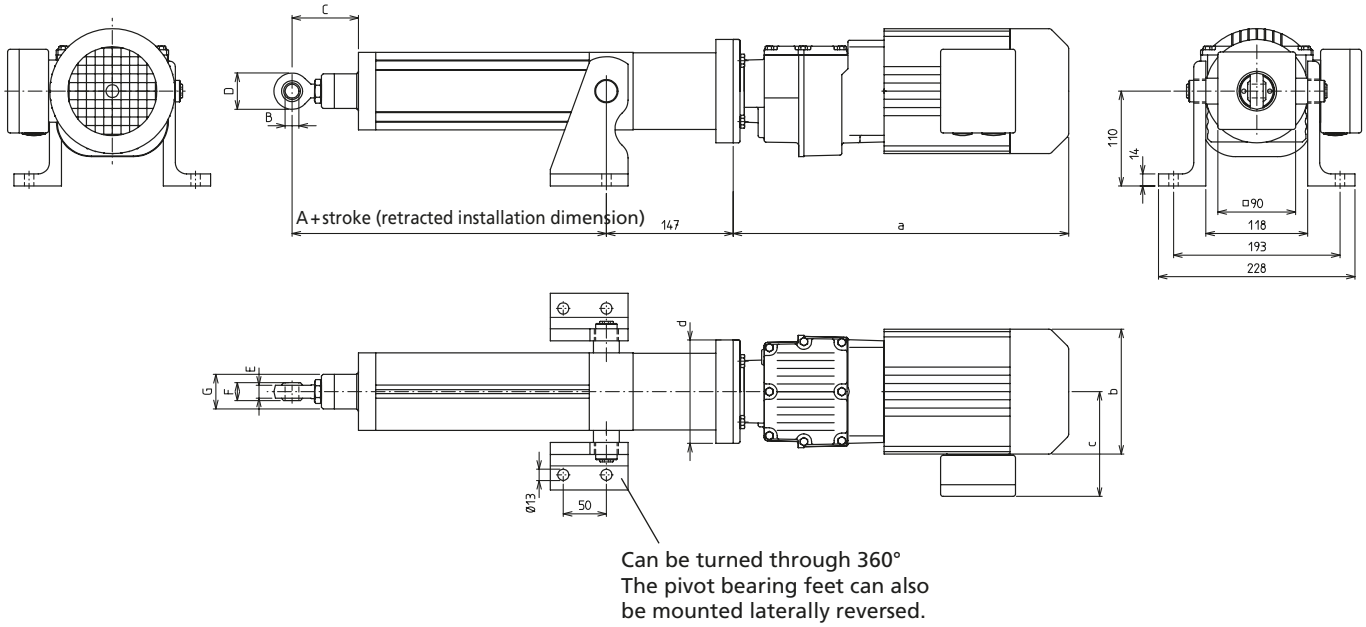


Can be turned through 360°
The pivot bearing feet can also be mounted laterally reversed.

[mm]

| 3-phase motors | a | b | c | d | Weight [kg] |
|---|---|---|---|---|---|
| RF17DRS71M4/BE1 | 428 | Ø139 | 129 | Ø120 | 15 |
| RF17DRN80M4/BE1 | 491 | Ø156 | 139 | | 20 |
| DRN90L4/BE2/FT | 407 | Ø179 | 150 | Ø140 | 37 |

| Type | A | B | C | D | E | F | G | Weight [kg] | |
|---|---|---|---|---|---|---|---|---|---|
| | | | | | | | | Basic length (dimension A) | Additional weight/100 mm |
| KG 32x5, 32x10, 32x40 | 294 | Ø20 | 86 | 50 | 18 | 25 | Ø50 | 12.8 | 1.9 |

# SLZ 90 P – Versions

**Order information:**

- Longer stroke lengths on request
- Other performance data and motors available on request

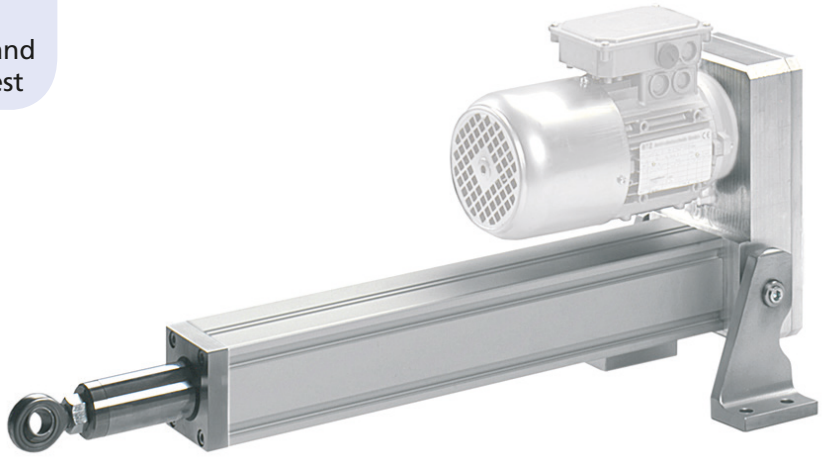

## SLZ 90 P versions with ball screw drive

| Code No. | Type | Max. force F [N] | Max. speed [mm/s] | Max. stroke [mm] | Output [kW] | Motor selection with motor brake |
|---|---|---|---|---|---|---|
| **Ball screw 32 x 5** | | | | | | |
| TQ21A1P_1_6_A_ _ _ _ | SLZ 90 P | 8,000 | 116 | 800 | 1.5 | DRN90L4/BE2/FT |
| TQ21A1P_4_6_A_ _ _ _ | SLZ 90 P | 18,000 | 26 | 1,300 | 0.75 | RF17DRN80M4/BE1 |
| **Ball screw 32 x 10** | | | | | | |
| TQ21A1P_1_7_A_ _ _ _ | SLZ 90 P | 3,500 | 233 | 1,000 | 1.5 | DRN90L4/BE2/FT |
| TQ21A1P_5_7_A_ _ _ _ | SLZ 90 P | 25,000 | 17 | 1,100 | 0.55 | RF17DRS71M4/BE1 |
| **Ball screw 32 x 40** | | | | | | |
| TQ21A1P_1_8_A_ _ _ _ | SLZ 90 P | 1,000 | 933 | 900 | 1.5 | DRN90L4/BE2/FT |

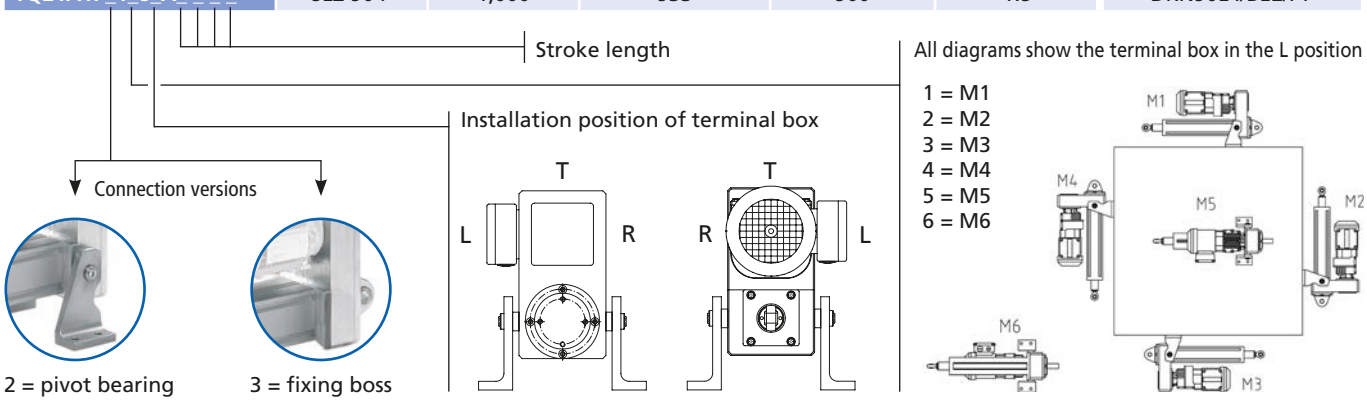

RK ROSE+KRIEGER

## Version with pivot bearing feet

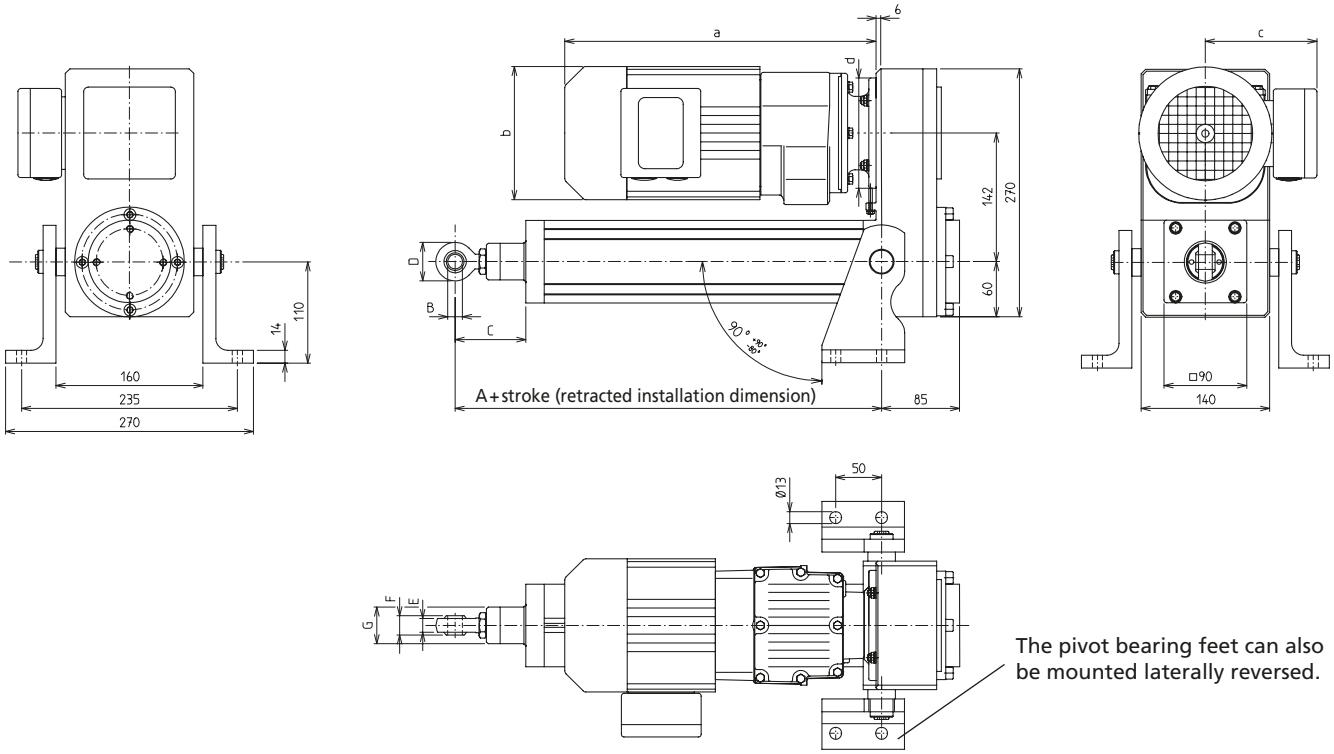


The pivot bearing feet can also be mounted laterally reversed.

[mm]

| 3-phase motors | a | b | c | d | Weight [kg] |
|---|---|---|---|---|---|
| RF17DRS71M4/BE1 | 428 | Ø139 | 129 | Ø120 | 15 |
| RF17DRN80M4/BE1 | 491 | Ø156 | 139 | | 20 |
| DRN90L4/BE2/FT | 407 | Ø179 | 150 | Ø140 | 37 |

| Type | A | B | C | D | E | F | G | Weight [kg] | |
|---|---|---|---|---|---|---|---|---|---|
| | | | | | | | | Basic length (dimension A) | Additional weight/ 100 mm |
| KG 32x5, 32x10, 32x40 | 294 | Ø20 | 86 | 50 | 18 | 25 | Ø50 | 13.1 | 1.9 |

# SLZ 90 P – Versions

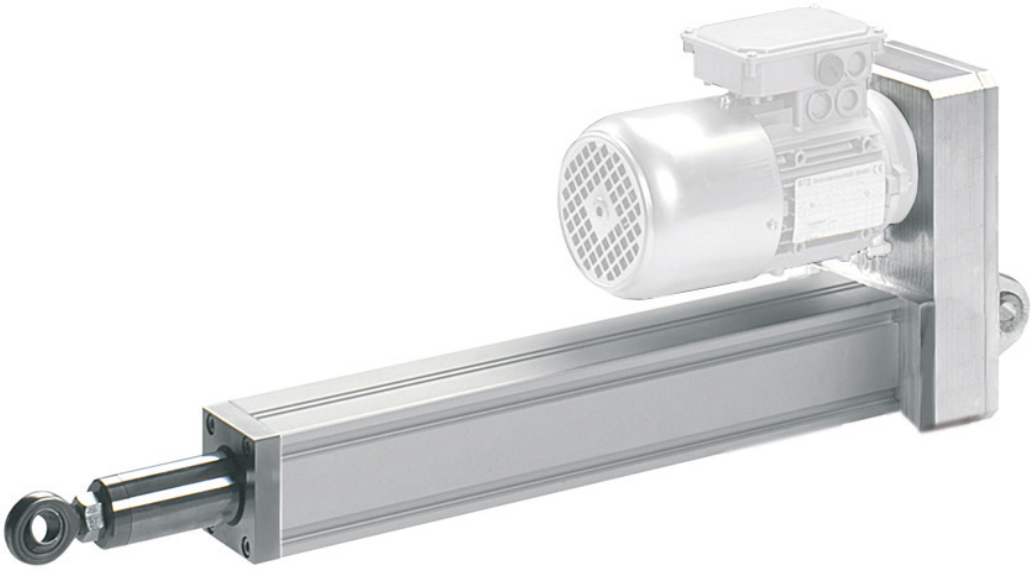

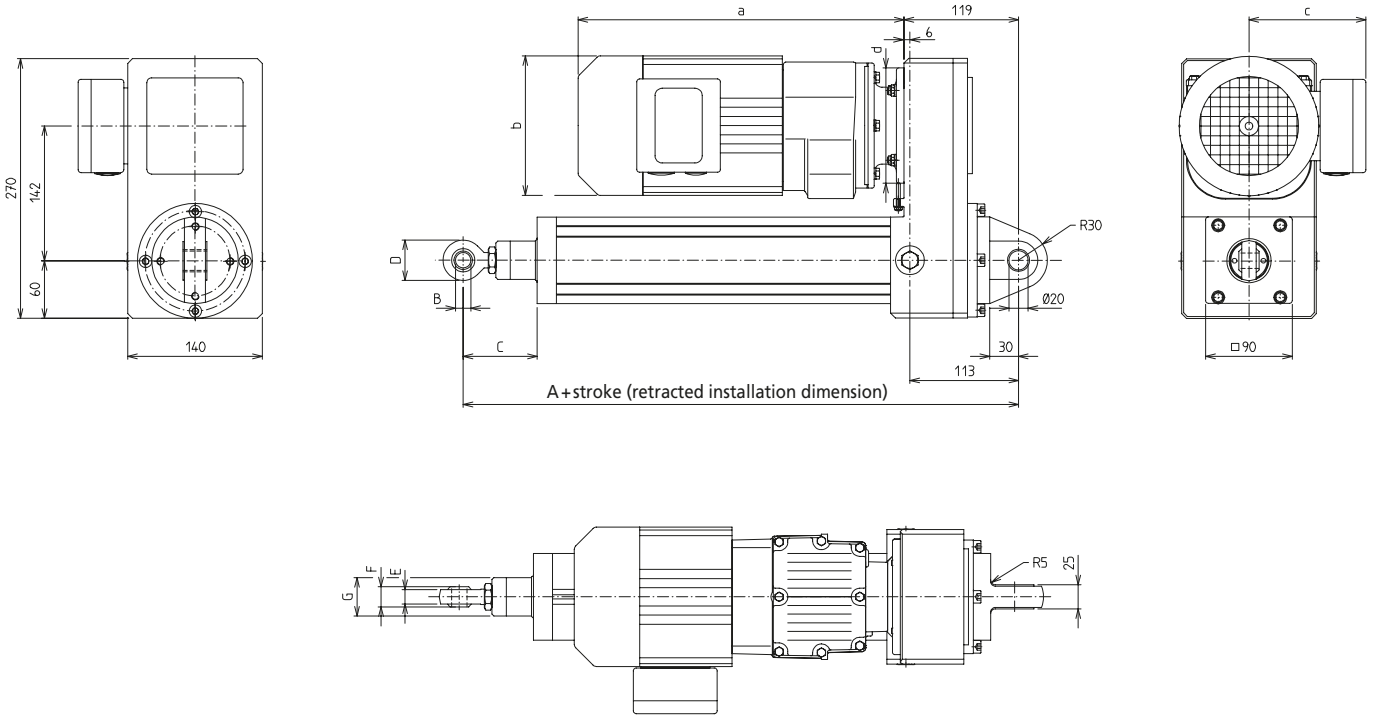


[mm]

| 3-phase motors | a | b | c | d | Weight [kg] |
|---|---|---|---|---|---|
| RF17DRN80M4/BE1 | 491 | Ø156 | 139 | Ø120 | 20 |
| RF17DRS71M4/BE1 | 428 | Ø139 | 129 | | 15 |

| Type | A | B | C | D | E | F | G | Weight [kg] | |
|---|---|---|---|---|---|---|---|---|---|
| | | | | | | | | Basic length (dimension A) | Additional weight/ 100 mm |
| KG 32x5, 32x10, 32x40 | 410 | Ø20 | 86 | 50 | 18 | 25 | Ø50 | 12.0 | 1.9 |

# SLZ 90 W – Versions

**Order information:**

- Longer stroke lengths on request
- Other performance data and motors available on request

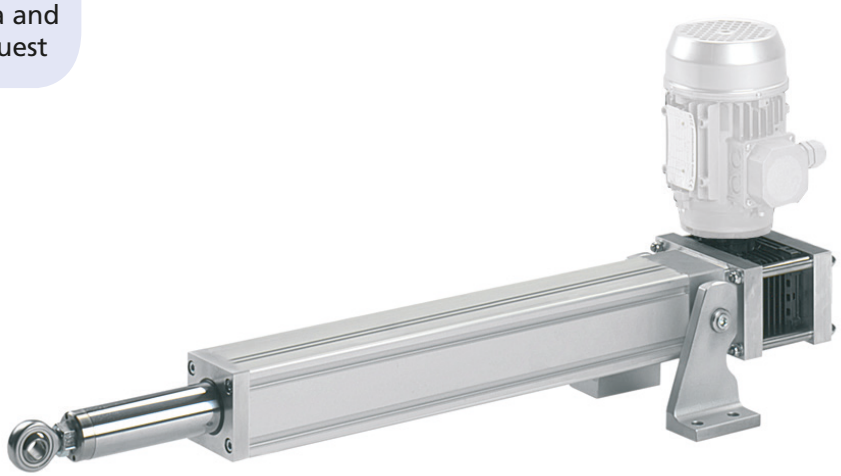

## SLZ 90 W versions with ball screw drive

| Code No. | Type | Max. force F [N] | Max. speed [mm/s] | Max. stroke [mm] | Output [kW] | Motor selection with motor brake |
|---|---|---|---|---|---|---|
| **Ball screw 32 x 10** | | | | | | |
| TQ21A1W_2_7_A_ _ _ _ | SLZ 90 W | 25,000 | 30 | 1,100 | 1.1 | DRN90S4/BE2/FT |
| **Ball screw 32 x 40** | | | | | | |
| TQ21A1W_2_8_A_ _ _ _ | SLZ 90 W | 6,000 | 126 | 1,600 | 1.1 | DRN90S4/BE2/FT |

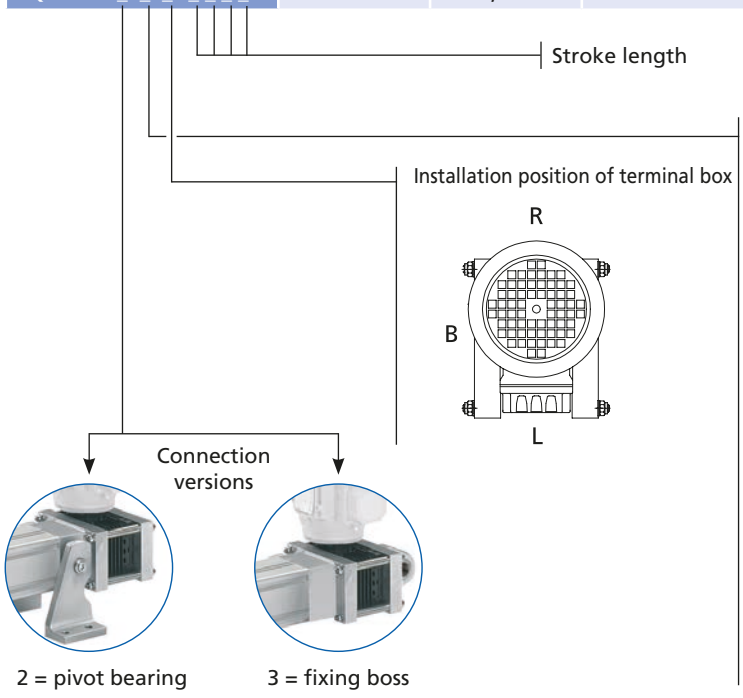


All diagrams show the terminal box in the L position

1 = M1
2 = M2
3 = M3
4 = M4
5 = M5
6 = M6

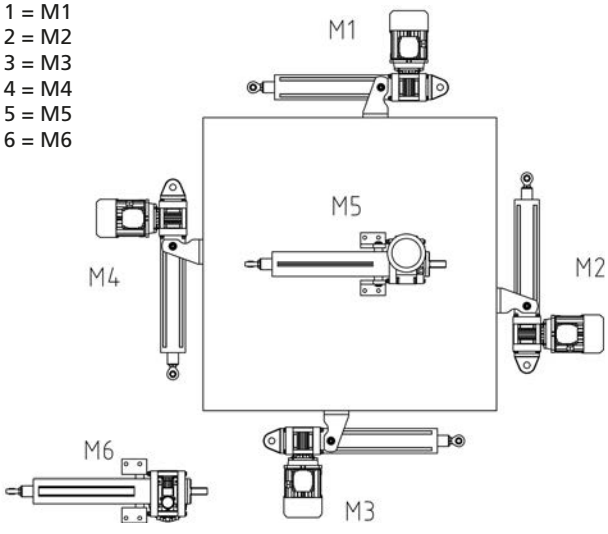

## Version with pivot bearing feet

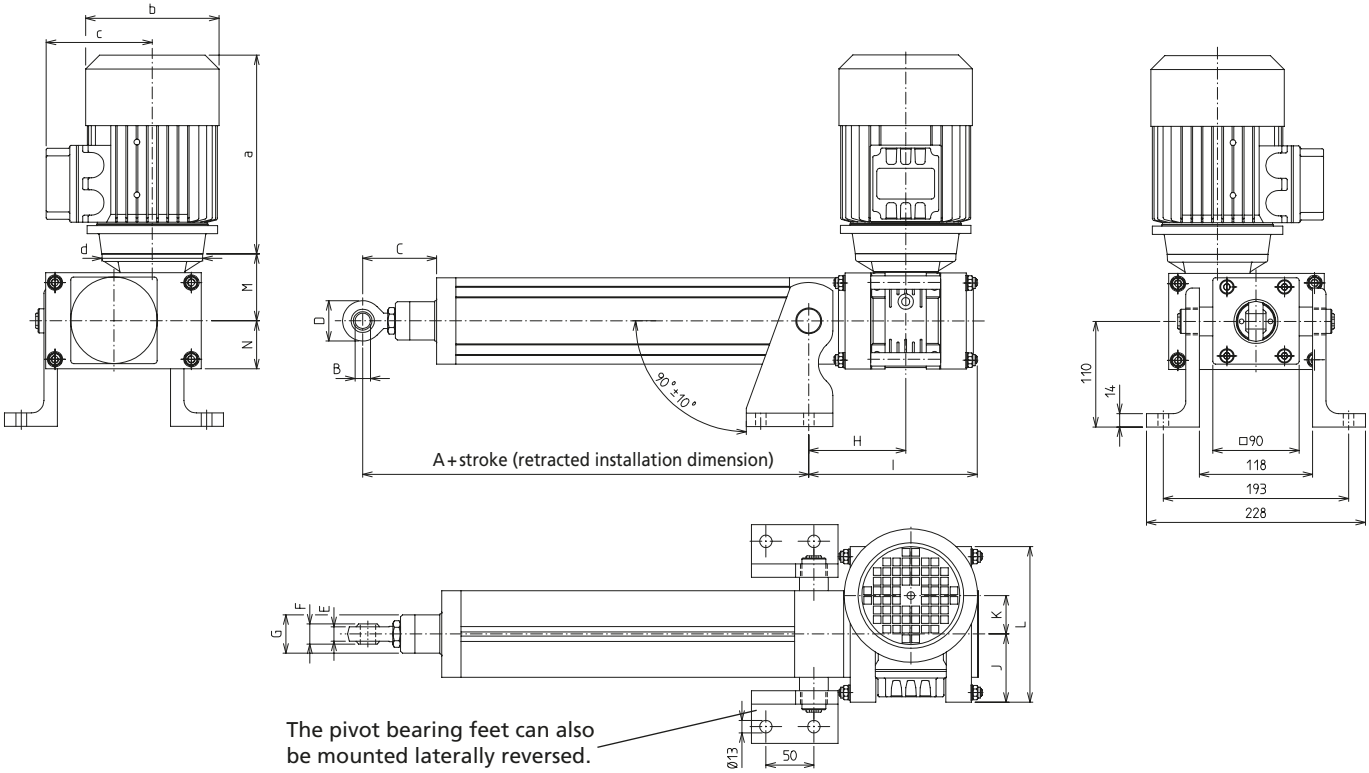


[mm]

| 3-cphase motors | a | b | c | d | Weight [kg] |
|---|---|---|---|---|---|
| DRN90S4/BE2/FT | 375 | Ø179 | 150 | Ø140 | 24 |

| Type | A | B | C | D | E | F | G | H | I | J | K | L | M | N | Weight [kg] | |
|---|---|---|---|---|---|---|---|---|---|---|---|---|---|---|---|---|
| | | | | | | | | | | | | | | | Basic length (dimension A) | Additional weight/ 100 mm |
| KG 32x10, 32x40 | 294 | Ø20 | 86 | 50 | 18 | 25 | Ø50 | 117.5 | 212 | 98 | 63 | 231.5 | 109 | 72 | 22.5 | 1.9 |

# SLZ 90 W – Fixing/Position determination

## Version with fixing boss



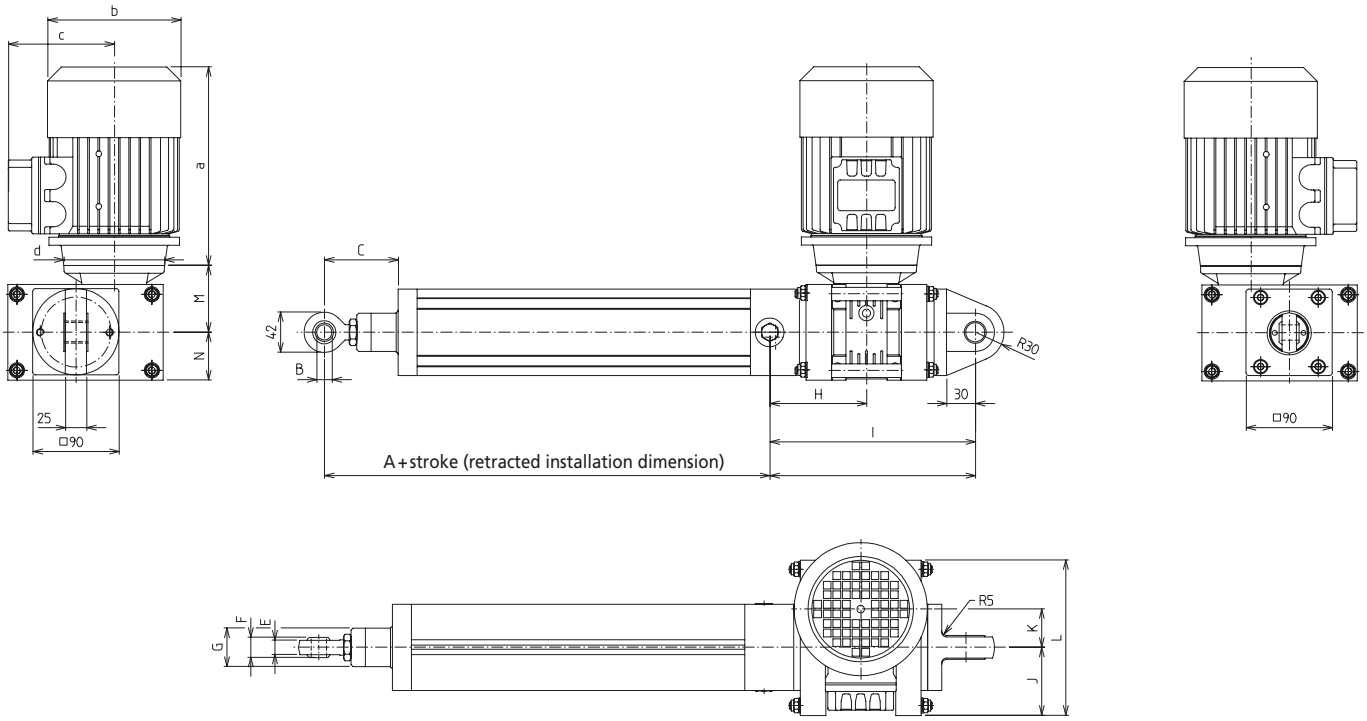


[mm]

| 3-phase motors | a | b | c | d | Weight [kg] |
|---|---|---|---|---|---|
| DRN90S4/BE2/FT | 375 | Ø179 | 150 | Ø140 | 24 |

| Type | A | B | C | D | E | F | G | H | I | J | K | L | M | N | Weight [kg] | |
|---|---|---|---|---|---|---|---|---|---|---|---|---|---|---|---|---|
| | | | | | | | | | | | | | | | Basic length (dimension A) | Additional weight/ 100 mm |
| KG 32x10, 32x40 | 294 | Ø20 | 86 | 50 | 18 | 25 | Ø50 | 117.5 | 212 | 98 | 63 | 231.5 | 109 | 72 | 22.5 | 1.9 |

**Order instruction square nut:**

- **Purchase only in lot sizes and a multiple of that, see product table below**

- Slot stones facilitate the fitting of attachments to the cylinder.
- To this end, they can be swivelled into the slot from above (Type -R-)

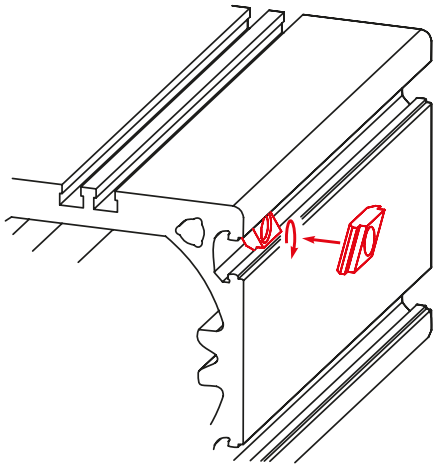

## Slot stone -R-

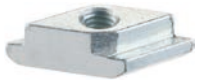

Type -R-

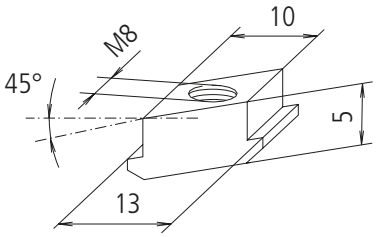


| Code No. | Type | lot sizes | F [N] |
|---|---|---|---|
| 4006223 | Slot stone -R- M8 | 10, 20, 30... pcs | 4,000 |

## Magnetic switch

- Signals from the magnetic switch can be collected and evaluated by a customer-provided control unit (such as a PLC).
- The switch can be retrofitted in the lateral slot (protected by a cover profile as standard)



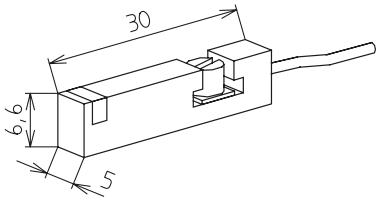


| Code No. | Type |
|---|---|
| QZD050599 | Magnetic switch, NC contact*, cable length 5.3 m |

*Magnetic switch, NO contact, available on request

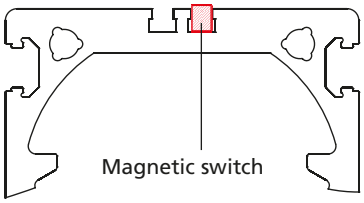


### Magnetic switch – Technical data

| | NC contact |
|---|---|
| Voltage | 10-30 V DC |
| Current consumption | < 10 mA |
| Output current | Max. 100 mA |
| Output type | PNP |
| Function indication | LED |
| Ambient temperature | -25°C to + 85°C |
| Protection class | IP 67 |

# Motors and controls



High-performance mechanical systems require the right motor and control system.

Our partners are experts in their fields and we offer a range of selected standard combinations.

However, it goes without saying that we can also tailor solutions exactly to the requirements of your application.



RK ROSE+KRIEGER

Motors for
linear actuators ..... 520 - 555

Converters and controls for
linear actuators ..... 556 - 573

# Motors & controls

## Motors and controls for linear actuators

### The alternative to the handwheel



Electronic handwheels



LZ S/P drive unit

---

### High-performance and optimally co-ordinated drives



3-phase motors



Stepper motors



Servo motors



Angular gear



RK-Control 2S

# Motors and controls - Table of contents


## Motors for linear actuators

- Electronic handwheels ..... 522
- LZ S/P drive unit ..... 528
- 3-phase motors ..... 532
- Stepper motors ..... 534
- Servo motors ..... 538

**Drive Accessories**

- Angular gear ..... 546
- Coupling/motor adaptor for three-phase motors ..... 552
- Coupling/motor adaptor for stepper motors ..... 553
- Coupling/motor adaptor for servo motors ..... 554

## Controls for linear actuators

- FW 3-phase frequency converter ..... 556
- RK control servo technology ..... 556

# EHL electronic handwheel

## The low-cost alternative to conventional hand adjustment




**With or without clevis**





## Versions

Version 1



Version 2

**EHL with transformer and hand switch**

Version 3



Version 4

**EHL without transformer (Front and rear view)**

Version 5



Version 6

**EHL with speed control**

Version 7



Version 8

**EHL with rotation speed control (with or without housing)**

## Features:

- Transformer rectifier with two different nominal speeds of 50 and 135 rpm
- Manufactured acc. to VDE, protection class II
- Wide range of versions available
- Rugged plastic housing
- Colour: Light grey, matt to RAL 7035

## Options:

- Other adaptors available on request

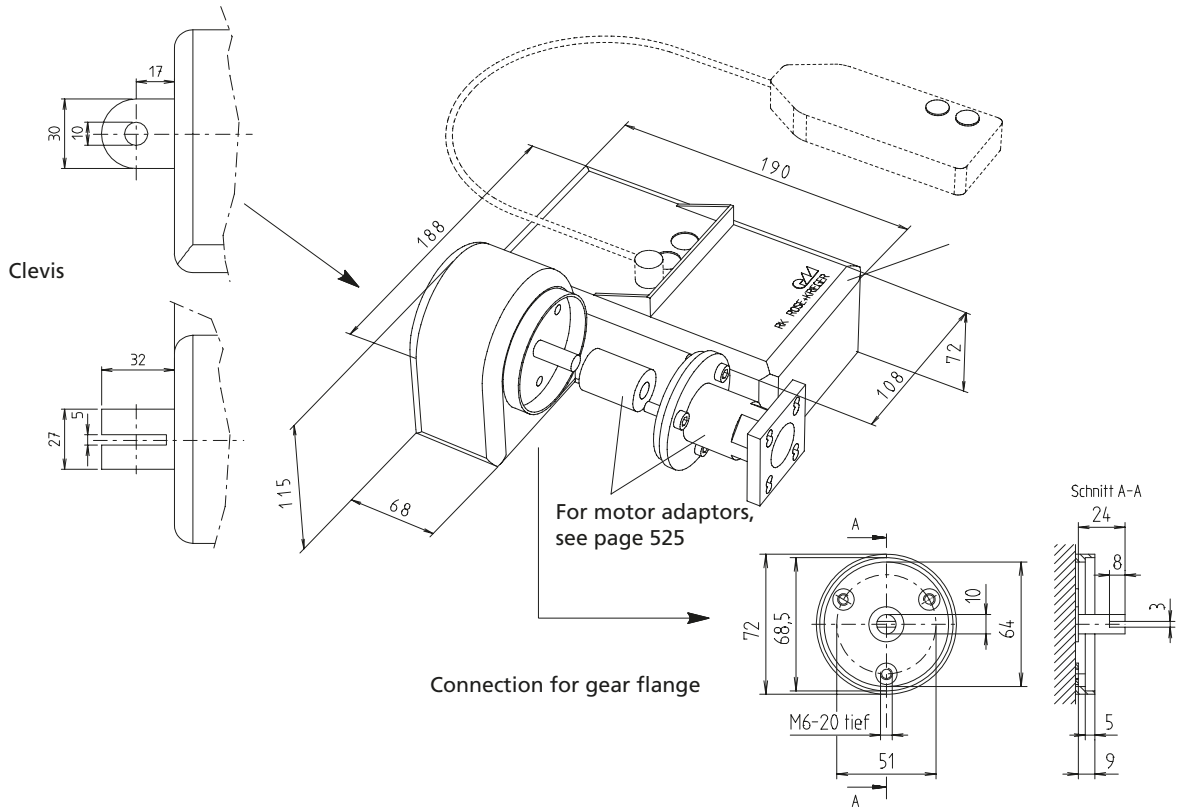


**Note:** The EHL must always be operated with limit switches. This prevents the unit getting stuck and any associated defects.

| Code No. | Type | Speed [rpm] | Output torque [Nm] | Clevis | For versions see page 522 |
|---|---|---|---|---|---|
| 90900 | EHL with transformer and hand switch | 50 | 5.5 | Yes | 1 |
| 90963 | EHL with transformer and hand switch | 50 | 5.5 | No | 2 |
| 90911 | EHL with transformer and hand switch | 135 | 2 | Yes | 1 |
| 90964 | EHL with transformer and hand switch | 135 | 2 | No | 2 |
| 90910 | EHL without transformer | 1)* 50 | 5.5 | Yes | 3 |
| 90960 | EHL without transformer | 1)* 50 | 5.5 | No | 4 |
| 90912 | EHL without transformer | 2)* 135 | 2 | Yes | 3 |
| 90962 | EHL without transformer | 2)* 135 | 2 | No | 4 |
| 90944 | EHL with rotation speed control and transformer | 50 | 5.5 | Yes | 5 |
| 90965 | EHL with rotation speed control and transformer | 50 | 5.5 | No | 6 |
| 90945 | EHL with rotation speed control and transformer | 135 | 2 | Yes | 5 |
| 90966 | EHL with rotation speed control and transformer | 135 | 2 | No | 6 |
| 90949 | EHL with rotation speed control without housing for control | 50 | 5.5 | Yes | 7 |
| 90950 | EHL with rotation speed control without housing for control | 135 | 2 | Yes | 7 |
| 90948 | Upgrade kit for all EHLs with transformer | complete with printed circuit board, rotation speed control | | | 8 |

1)* in connection with an RK transformer control (at a customer-provided supply voltage of 24 V, around 36 rpm)
2)* in connection with an RK transformer control (at a customer-provided supply voltage of 24 V, around 97 rpm)

# EHL – Technical data/fixing

## General information/operating conditions

| | |
|---|---|
| Duty cycle | 50% at half Starting torque / 15% at max. Starting torque |
| Starting torque | 5.5 Nm at 50 rpm/2 Nm at 135 rpm |
| Thermal protection | 115 °C |
| Protection class | IP 20 |
| Rotation speed control | Electronic, infinitely variable adjustment using a rotary potentiometer |
| Fast mode | Operating mode with nominal speed (50 or 135 rpm), rotary potentiometer without function |
| Creep mode | Infinitely variable speed adjustment using a rotary potentiometer |
| Drive set-up | Can be rotated in 90°increments – connecting cable must be extended |

## Function description - rotation speed control

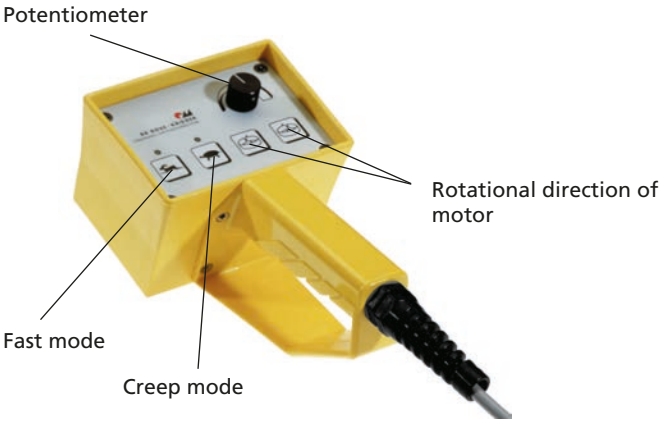


The rotation speed control is an electronic solution for infinitely variable speed adjustment using a rotary potentiometer.

**Fast mode:** The EHL is operated at nominal speed (50 or 135 rpm). The rotary potentiometer has no function.

**Creep mode:** A rotary potentiometer enables infinitely variable adjustment of the speed (0-50 or 0-135 rpm).
e.g. in set-up mode

## Set-up of drive/transformer



The position of the drive in relation to the transformer can be changed, depending on the installation conditions (can be rotated in 90° increments). However, the connecting cable must be extended for this purpose.

We can also customise the EHL to suit your individual requirements. For standard version, see photo on page 522.

## Motor adaptor for linear units

**Linear unit connection**

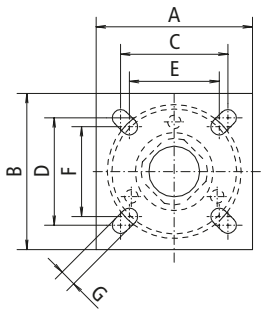


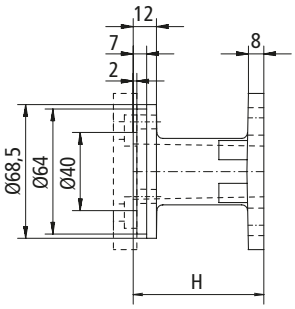


**EHL connection**

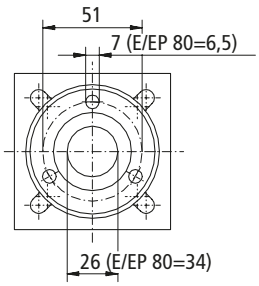


**Only for linear unit Type E**

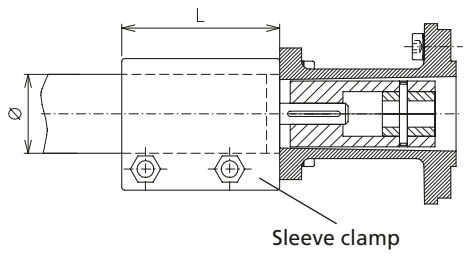


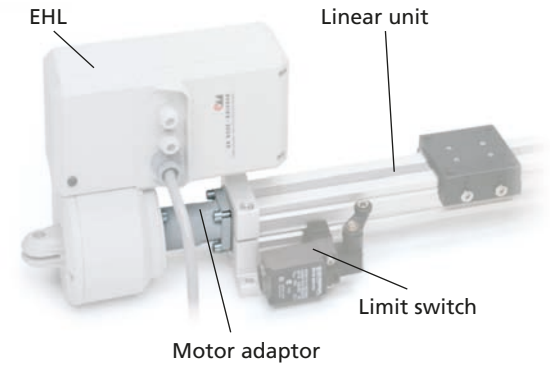


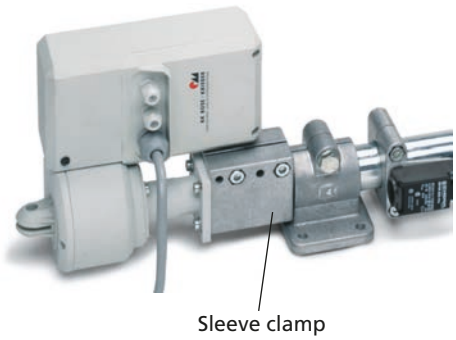


[mm]

| Code No. | for linear unit | PinØ unit | A | B | C | D | E | F | G | H | L | Dia-meter |
|---|---|---|---|---|---|---|---|---|---|---|---|---|
| 92663 | E 30 | 8 | 50 | 50 | 30 | 40 | 30 | 30 | 6 | 67 | 60 | 30 |
| 92664 | E 40 | 12 | 60 | 60 | 46 | 46 | 36 | 36 | 7 | 67 | 75 | 40 |
| 92684 | E 50 | 12 | 65 | 65 | 46 | 46 | – | – | 9 | 67 | 67 | 60 |
| 949666 | E 60 | 14 | 80 | 80 | 55 | 55 | 46 | 46 | 9 | 67 | 110 | 60 |
| 92682 | E 80 | 20 | 80 | 80 | 70 | 70 | – | – | 6.2 | 59 | | 80 |
| 92667 | EP 30 | 8 | 50 | 50 | 30 | 40 | 30 | 30 | 6 | 67 | – | – |
| 92668 | EP 40/COPAS 40 | 12 | 60 | 60 | 46 | 46 | 36 | 36 | 7 | 67 | – | – |
| 92669 | EP 50 | 12 | 65 | 65 | 46 | 46 | – | – | 9 | 67 | – | – |
| 92670 | EP 60 | 14 | 80 | 80 | 55 | 55 | 46 | 46 | 9 | 67 | – | – |
| 92683 | EP 80 | 20 | 92 | 92 | 64 | 64 | – | – | 8.5 | 59 | | – |
| 92680 | EV/AV 30 | 8 | 40 | 40 | 29 | 29 | – | – | 6 | 67 | – | – |
| 92671 | EV/AV 40 | 10 | 40 | 40 | 29 | 29 | – | – | 6 | 67 | – | – |
| 92672 | EV/AV 50 | 12 | 50 | 50 | 38 | 38 | – | – | 7 | 67 | – | – |
| 92679 | EV 60 | 12 | 60 | 60 | 46 | 46 | 36 | 36 | 7 | 67 | – | – |
| 92673 | EV/AV 80 | 14 | 80 | 80 | 55 | 55 | 46 | 46 | 9 | 67 | – | – |
| 92674 | COPAS 20 | 8 | 46 | 50 | 30 | 40 | – | – | 7 | 67 | – | – |
| 92675 | COPAS 30 | 10 | 60 | 60 | 46 | 46 | 36 | 36 | 7 | 67 | – | – |
| 92676 | PLS-II 30 | 6 | 40 | 40 | 29 | 29 | – | – | 6 | 67 | – | – |
| 92677 | PLS-II 40 | 8 | 40 | 40 | 29 | 29 | – | – | 6 | 67 | – | – |
| 92678 | PLS-II 50 | 10 | 50 | 50 | 38 | 38 | – | – | 7 | 67 | – | – |
| 92679 | PLS-II 60 | 12 | 60 | 60 | 46 | 46 | 36 | 36 | 7 | 67 | – | – |
| 92681 | PLS-II 80 | 14 | 80 | 80 | 55 | 55 | 46 | 46 | 9 | 67 | – | – |

**Note: To mount the motor adaptor on a Type E linear unit, a sleeve clamp is required (this is included with the adaptor). Please note that the stroke may be limited.**

## Mechanical limit switch



| | |
|---|---|
| Max. voltage | 250 V AC |
| Max. switching current | 6 A |
| Max. starting current | 16 A |
| Operating cycles | Max. 6000/h |
| Mechanical lifetime | 1 x $10^7$ switching cycles |
| Axis lever adjustment | locking by 360° |
| Protection class | IP 65 |
| Ambient temperature | -30°C to +80°C |

| Code No. | Type |
|---|---|
| 91900 | NC contact/NO contact |
| 91901 | Connecting cable 3 m for limit switches, with PG gland |



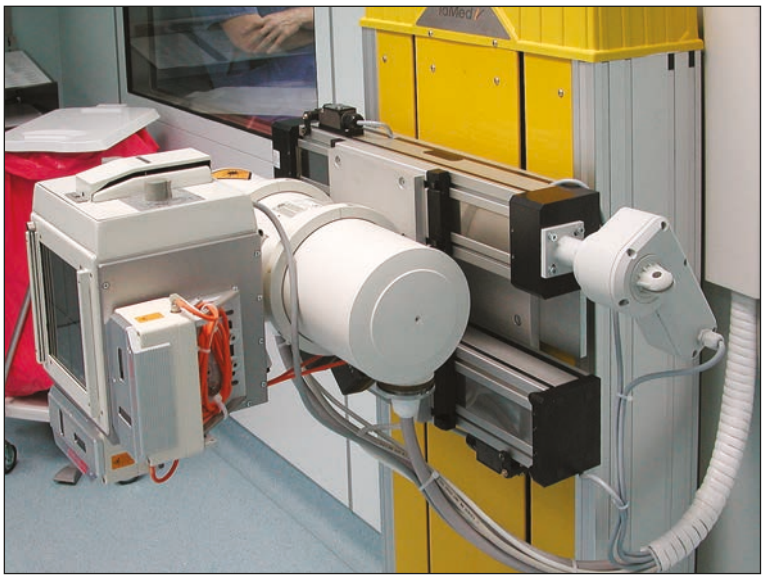

X-ray machine: lateral adjustment via EHL with RK DuoLine S, height adjustment via RK Easylift.

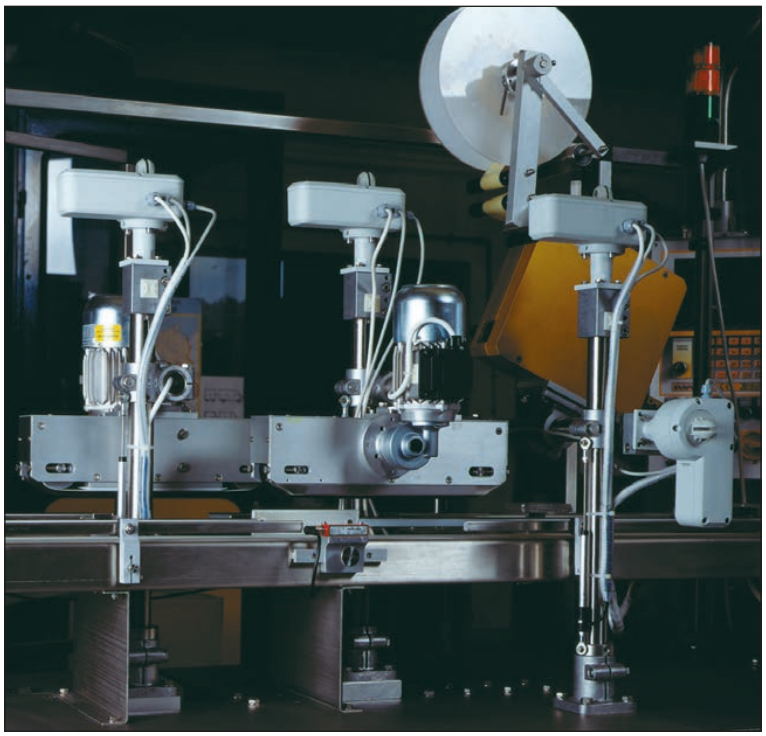

Labelling machine: The height adjustment is controlled by a series linear unit with EHL.

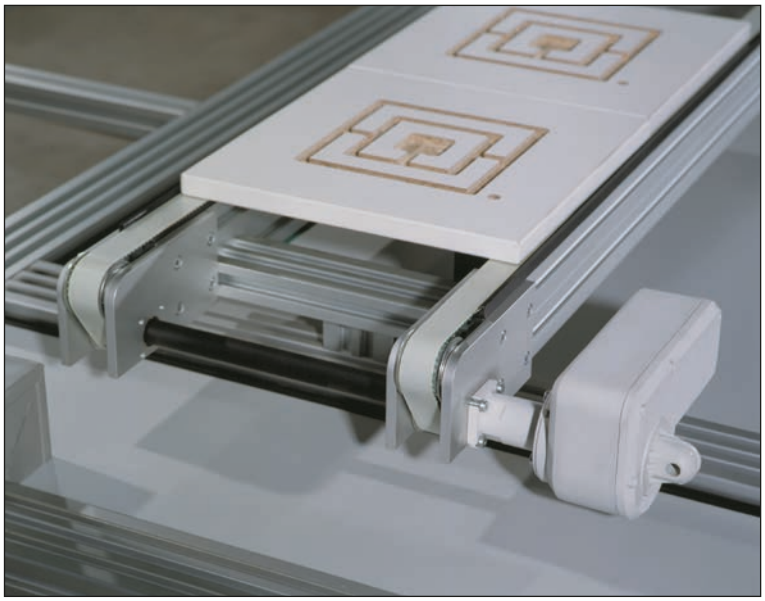

Transfer system: drive for material feed.

## The high-performance drive units of the LZ S series (rod shaped) and LZ P (parallel mounted motor) for the control of linear axes

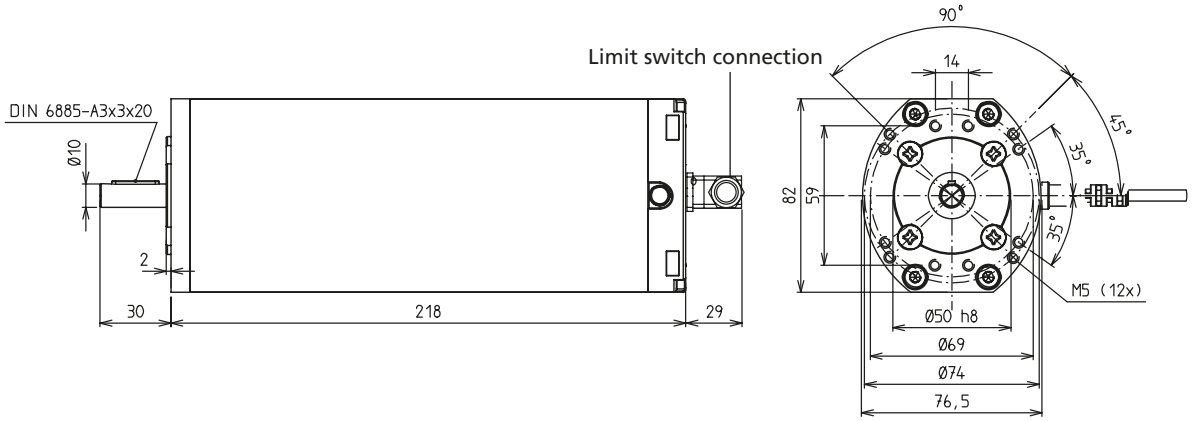


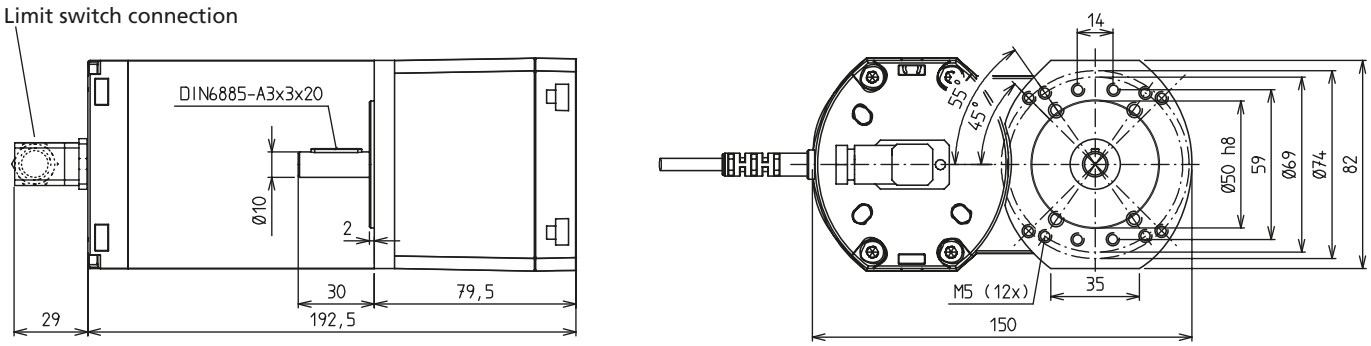


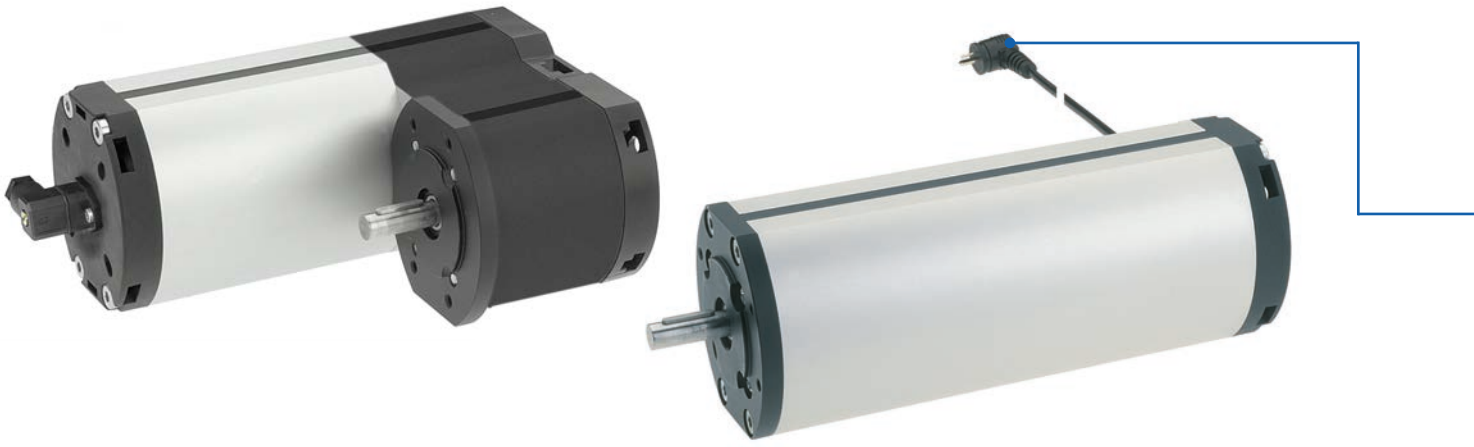

### Features:

- Rotation speed control with MultiControl mono supported (with elec. connection “a”)
- RK synchronous control supports storage of up to 25 memory positions (with elec. connection “c”)
- Synchronous travel supported
- Compact design
- Housing made of aluminium
- Attractive design

### Options:

- Three different options for electrical connection
- Various adaptors available on request

## General information/operating conditions

| | |
|---|---|
| Voltage | 24-36 V DC |
| Current consumption | Max. 4.5 A |
| Protection class | IP 54 |
| Ambient temperature | -10°C to +60°C |
| Duty cycle | at nominal load, 15% (max. 1,5 mins operating time, 8,5 mins rest time) |

## Power diagram*

*All data were determined using an RK transformer control (at room temperature). If the unit is operated from a fixed voltage source, these values may vary slightly.

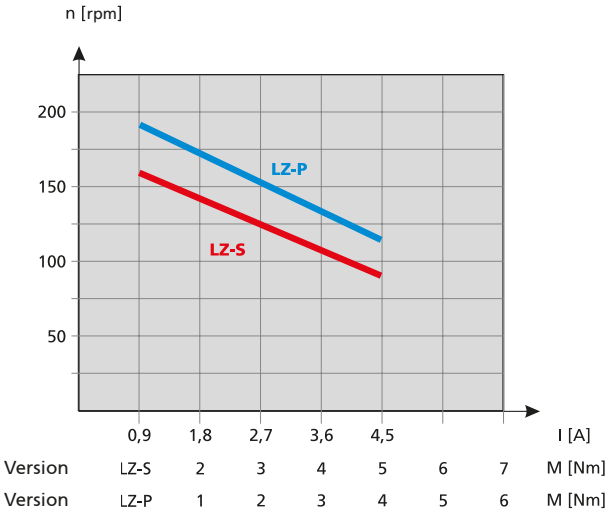


## Electrical connection
## Choice of:

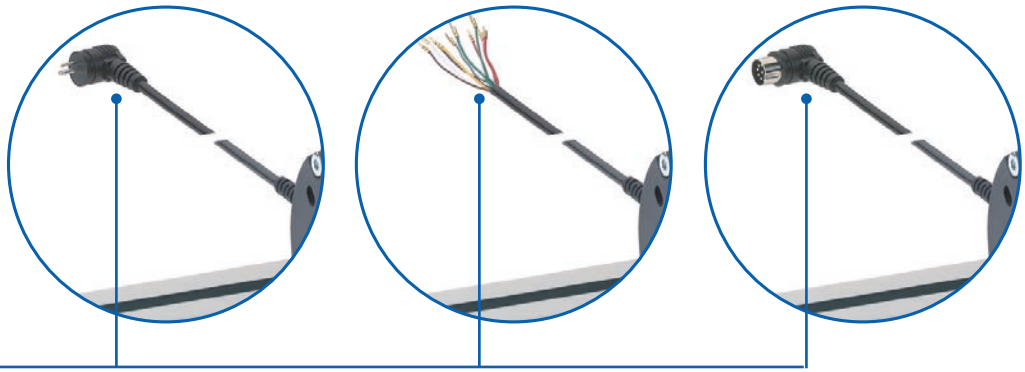

### External control

✓ Connecting cable is fed out of the cylinder and connects to a control (range of connecting options)

### Elec. connection “a”

✓ Connection (2.5 m) to RK transformer control, MultiControl mono or external fixed voltage source. Only power cable is fed out.

### Elec. connection “b”

✓ All connecting cables (approx. 1 m) fed directly out of the unit (motor, 2-channel Hall sensor) e.g for connection to a PLC

### Elec. connection “c”

✓ Connection (2.5 m) to PM synchronous control

**Note:** The drive units must not be driven against the mechanical stops! All versions support the connection of customer-supplied limit switches. While it is possible to operate the units without limit switches, we do not recommend it.

| Code No. | Type | Electrical connection | Max. output torque [Nm] | Max. speed [rpm] | Weight [kg] |
|---|---|---|---|---|---|
| 90980 | LZ S | a | 5 | 160 | 1.8 |
| 90981 | LZ S | b | 5 | 160 | 1.8 |
| 90984 | LZ S | c | 5 | 160 | 1.8 |
| 90982 | LZ P | a | 4 | 196 | 3.0 |
| 90983 | LZ P | b | 4 | 196 | 3.0 |
| 90985 | LZ P | c | 4 | 196 | 3.0 |

## Controls

For dimensions and other technical data, please refer to the chapter “Motors and controls”

- Input voltage 230 V AC
- Output voltage 24/36 V AC

Transformer control 120 VA



approx. 24 V DC

MultiControl



24/36 V DC

| Code No. | Version | |
|---|---|---|
| QZA07C13BQ021 | Transformer control 120 VA, up to max. I = 3 A current output at 10% duty cycle | Controls up to 2 drives |
| QSTAACA1AA000 | MultiControl mono connection A, up to max. I= 10 A current consumption, 24 V DC | Controls up to 2 drives |
| QSTACCA1AA000 | MultiControl mono connection C, up to max. I= 12 A current consumption, 36 V DC | Controls up to 2 drives |
| QST35C02AA000* | Synchronous control RK MultiControl duo, up to max. I = 12 A current output at 15% duty cycle | 1-2 drives synchronised |
| QST35C04AA000* | Synchronous control RK MultiControl quadro, up to max. I = 12 A current output at 15% duty cycle | 1-4 drives synchronised |
| | *For connection of a synchronous control, the drive unit must be fitted with electrical connection “c” | |
| | **Accessories** | |
| QZD0702844000* | Straight connecting cable (4 m) with 5-pin connector and open cable end | |

*for the connection of a parallel hand switch or an external potentiometer (in the case of the MultiControl mono)

## Motor adaptor for linear units

Further adaptors available on request

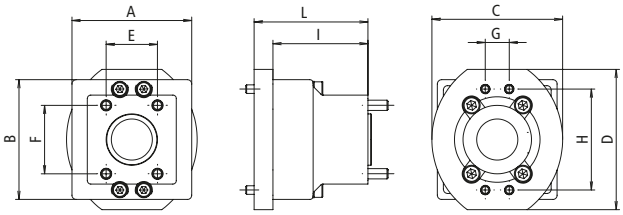


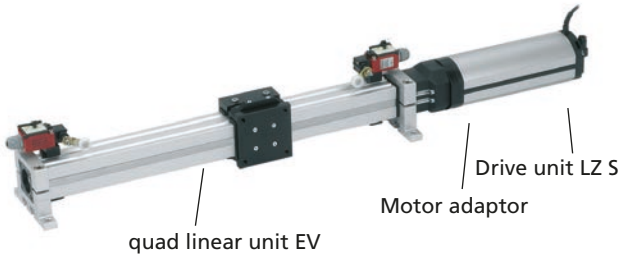


Application example:
Synchronous operation of two quad linear units by means of drive units LZ S

[mm]

| Linear unit | LZ S Code No. | LZ P Code No. | Coupling Code No. | A | B | C | D | E | F | G | H | I | L |
|---|---|---|---|---|---|---|---|---|---|---|---|---|---|
| E 30 | 949700 | 949701 | 9109200810 | 56 | 74 | 76.4 | 82 | – | – | 56.5 | 39.6 | 65 | 134 |
| E 40 | 949702 | 949703 | 9114301012 | 89.2 | 66 | 76.4 | 82 | – | – | 56.5 | 39.6 | 78 | 129 |
| E 50 | 949704 | 949705 | 9114301012 | 66 | 84 | 76.4 | 82 | – | – | 56.5 | 39.6 | 78 | 129 |
| E 60 | 949706 | – | 9114301014 | 80 | 103 | 76.4 | 82 | – | – | 52.3 | 52.3 | 92 | 143 |
| EP(X)30 | 949710 | 949711 | 9109200810 | 70 | 70 | 76.4 | 82 | 30 | 40 | 14 | 59 | 55.5 | 66.5 |
| EP(X)40 | 949712 | 949713 | 9114301012 | 70 | 70 | 76.4 | 82 | 46 | 46 | 52.3 | 52.3 | 73.5 | 81.5 |
| EP(X)50 | 949714 | – | 9114301012 | 70 | 70 | 76.4 | 82 | 46 | 46 | 52.3 | 52.3 | 73 | 81 |
| EP(X)60 | 949716 | – | 9114301014 | 80 | 80 | 76.4 | 82 | 55 | 55 | 52.3 | 52.3 | 68 | 81 |
| EV 30 | 949720 | 949721 | 9109200810 | 70 | 70 | 76.4 | 82 | 21 | 21 | 14 | 59 | 54.5 | 65.5 |
| EV 40 | 949722 | 949723 | 9114301010 | 70 | 70 | 76.4 | 82 | 29 | 29 | 14 | 59 | 61 | 72 |
| EV 50 | 949724 | 949725 | 9114301012 | 70 | 70 | 76.4 | 82 | 38 | 38 | 14 | 59 | 60 | 73 |
| EV 60 | 949726 | 949727 | 9114301012 | 70 | 70 | 76.4 | 82 | 43 | 43 | 14 | 59 | 62 | 73 |
| EV 80 | 949728 | 949729 | 9114301014 | 80 | 80 | 76.4 | 82 | 64 | 64 | 52.3 | 52.3 | 68.5 | 81.5 |

## Mechanical limit switch

**Material:**
thermoplastic, fully insulated



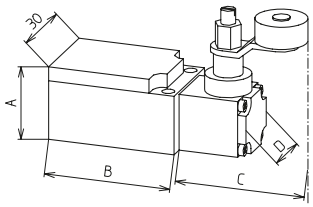


| Type | 18-60 |
|---|---|
| Max. voltage | 250 V AC |
| Max. switching current | 6 A |
| Max. starting current | 16 A |
| Operating frequency | Max. 6000/h |
| Mechanical lifetime | 10 million switching cycles |
| Axis lever adjustment | locking at 10° increments |
| Protection class | IP 65 |
| Ambient temperature | -30°C to +80°C |

[mm]

| Code No. | Type | Switching function | A | B | C | D |
|---|---|---|---|---|---|---|
| 91905 | 18-60 | NC contact/NO contact | 26.5 | 45 | 45.5 | 21 |

## Hand switches/accessories




| Code No. | Version | Fig. |
|---|---|---|
| **Hand switch for transformer control** | | |
| QZB02C03AD031 | Hand switch with 1 m spiral cable – 6 function keys | 2 |
| **Hand switch for transformer or synchronous control** | | |
| QZB02C03AB031 | Hand switch with 1 m spiral cable – 2 function keys | 1 |
| QZB00D04AB041 | Hand switch with 1 m spiral cable – 2 function keys | 7 |
| QZB00A00AB051 | Table hand switch with 1 m cable – 2 function keys | 11 |
| QZB00A00BC011 | Membrane keyboard with 1 m spiral cable – 2 function keys | 12 |
| QZB02C01AE114 | Foot switch – 2 function keys | 13 |
| QZB00D07BK141 | Radio-controlled hand switch – 2 function keys | 14 |
| **Hand switch for synchronous control** | | |
| QZB00D04AD041 | Hand switch with 1 m spiral cable – 6 function keys | 8 |
| **Accessories for hand switches with spiral cable** | | |
| QZD000072 | Bracket for hand switch | 3 |
| QZD000074 | Hand switch drawer | 9 |

# 3-phase motors – Technical data



## General information/operating conditions

| Type | 90 W | 120 W | 180 W | 250 W |
|---|---|---|---|---|
| Motor speed [rpm] | 1400 | 2800 | 1400 | 2800 |
| Torque without gear unit [Ncm] | 28 | 41 | 68 | 68 |
| Braking voltage [V] | 220 | 220 | 220 | 220 |
| Nominal current [A] | 0.4 | 0.45 | 0.7 | 0.81 |
| Permitted dynamic shaft load [N]<br>axial<br>radial | <br>80<br>120 | <br>80<br>120 | <br>100<br>150 | <br>100<br>150 |
| Protection class | IP 54 | IP 54 | IP 54 | IP 54 |
| Weight [kg] | 4.5 | 4.5 | 6.5 | 6.0 |
| Weight with brake [kg] | 5.3 | 5.3 | 7.3 | 7.0 |

| Code No. | Type |
|---|---|
| 9121 _ _ _ | 90 W |
| 9123 _ _ _ | 120 W |
| 9124 _ _ _ | 180 W |
| 9125 _ _ _ | 250 W |

**Gear selection (see next page)**
05 = gear 5:1
07 = gear 7:1
10 = gear 10:1
11 = gear 11:1
15 = gear 15:1
17 = gear 17:1
18 = gear 18:1
: = :
: = :

0 = Standard
1 = Brake
2 = 2:1 pole-changing (not with 90 W)

**Order example:**
Three-phase motor 120 W
2:1 pole-changing, gear 7:1
9123 2 07

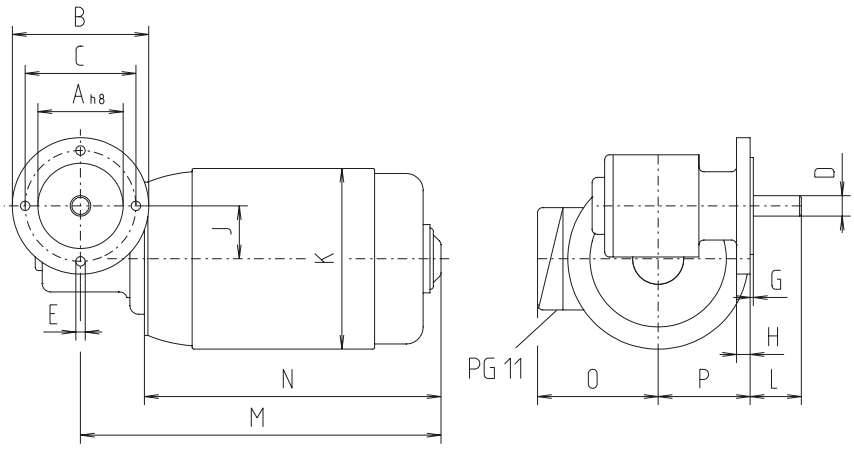


[mm]

| Motor | Connection dimensions | | | | | | Dimensions | | | | | | Shaft dimensions | |
|---|---|---|---|---|---|---|---|---|---|---|---|---|---|---|
| | A | B | C | E | G | H | J | K | M | N | O | P | D | L |
| 90 W, 380/220 V | 50 | 80 | 65 | 5.5 | 2.5 | 8 | 31 | 110 | 203 | 166 | 92 | 54 | 12 | 30 |
| 90 W, with brake | 50 | 80 | 65 | 5.5 | 2.5 | 8 | 31 | 110 | 238 | 201 | 92 | 54 | 12 | 30 |
| 120 W, 380/220 V | 50 | 80 | 65 | 5.5 | 2.5 | 8 | 31 | 110 | 203 | 166 | 92 | 54 | 12 | 30 |
| 120 W, with brake | 50 | 80 | 65 | 5.5 | 2.5 | 8 | 31 | 110 | 238 | 201 | 92 | 54 | 12 | 30 |
| 120 W, pole-changing | 50 | 80 | 65 | 5.5 | 2.5 | 8 | 31 | 110 | 238 | 201 | 92 | 54 | 12 | 30 |
| 180 W, 380/220 V | 80 | 120 | 100 | M6 | 3 | 10 | 33 | 124 | 232 | 190 | 108 | 66 | 14 | 33 |
| 180 W, with brake | 80 | 120 | 100 | M6 | 3 | 10 | 33 | 124 | 268 | 226 | 108 | 66 | 14 | 33 |
| 180 W, pole-changing | 80 | 120 | 100 | M6 | 3 | 10 | 33 | 124 | 268 | 226 | 108 | 66 | 14 | 33 |
| 250 W, 380/220 V | 80 | 120 | 100 | M6 | 3 | 10 | 33 | 124 | 232 | 190 | 108 | 66 | 14 | 33 |
| 250 W, with brake | 80 | 120 | 100 | M6 | 3 | 10 | 33 | 124 | 268 | 226 | 108 | 66 | 14 | 33 |
| 250 W, pole-changing | 80 | 120 | 100 | M6 | 3 | 10 | 33 | 124 | 268 | 226 | 108 | 66 | 14 | 33 |

## Gear selection

| Eff. torque [Nm] | | | | | | | | | | | | | | |
|---|---|---|---|---|---|---|---|---|---|---|---|---|---|---|
| Transmission: | 100:1 | 75:1 | 55:1 | 50:1 | 38:1 | 30:1 | 24:1 | 20:1 | 18:1 | 15:1 | 12:1 | 10:1 | 7:1 | 5:1 | 2.5:1 |
| 90/1400 rpm | 18 | 13 | 15 | 11 | 11 | 9 | 7.2 | 7.5 | 6.7 | 6.1 | 5.2 | 4.3 | 3.3 | 2.4 | 1.3 |
| 120/2800 rpm | 14 | 10 | 10 | 8.2 | 8.1 | 6.5 | 5.3 | 5.2 | 4.8 | 4.2 | 3.6 | 3.0 | 2.3 | 1.7 | 0.9 |
| Transmission: | 75:1 | 56:1 | 38:1 | 32:1 | 30:1 | 24:1 | 20:1 | 17:1 | 15:1 | 11:1 | 7:1 | 5:1 | | | |
| 180/1400 rpm | 23 | 21 | 20 | 19 | 17 | 15 | 14 | 13 | 11 | 9.3 | 6.4 | 4.8 | | | |
| 250/2800 rpm | 18 | 16 | 15 | 14 | 13 | 11 | 10 | 9.6 | 8.3 | 6.8 | 4.6 | 3.5 | | | |

## Chain-type motor connecting cable





| Code No. | Type | |
|---|---|---|
| 957050 | Motor cable 4 x 1.5 + 2 x (2 x 0.75) mm | for connection to a frequency converter, any length |

**Length:**
0 2 5 = 2.5 m
0 5 0 = 5.0 m
0 7 5 = 7.5 m
1 0 0 = 10.0 m
1 2 5 = 12.5 m
1 5 0 = 15.0 m
2 0 0 = 20.0 m
2 5 0 = 25.0 m

## PD 6S

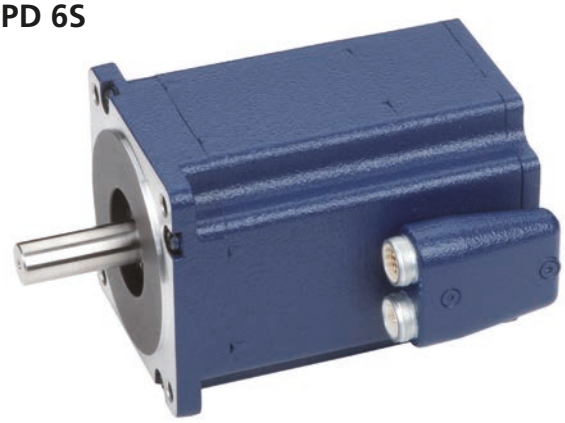

### Features:

- Up to 16 motion sequences (position and speed profiles) can be stored in the motor, selected via digital inputs, stopped and started.
- Using an analogue input, the speed, position and torque can also be controlled.
- Motor programming via RS485.
- Standard protocol as per CANopen/DSP 402 via CAN bus.
- Simple start-up and configuration using free Windows software.
- Position feedback and monitoring with integrated encoders with 500 pulses per motorrevolution.

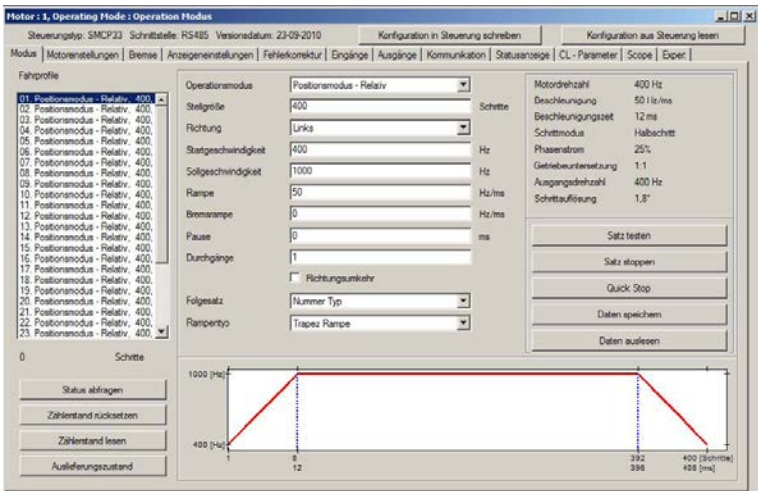


**Inputof various motion sequences in the clearly structured programming software**

Relative and absolute positions can be saved in the set table. Travel speed and acceleration and deceleration ramp can be freely selected for any position.

| Code No. | Type |
|---|---|
| 958200PD6S | PD 6S |

## General information/operating conditions

| | |
|---|---|
| Operating voltage | 24 to 48V / DC |
| Interface: | RS485 or CANopen |
| Operating modes | Position, speed, flag position, clock direction |
| Operating mode | 1/1, 1/2, 1/4, 1/5, 1/8, 1/10, 1/32, 1/64, adaptive (1/128) |
| Position monitoring | Automatic error correction up to 0.9° |
| Inputs | 6 optocoupler inputs (5-24V) / 1 analogue input |
| Outputs | 3 open drains |
| Rotor moment of inertia | 1.9 kg cm² |
| Temperature range | 0°C to +40°C |
| Motor weight | 3.4 kg |

## Torque curve

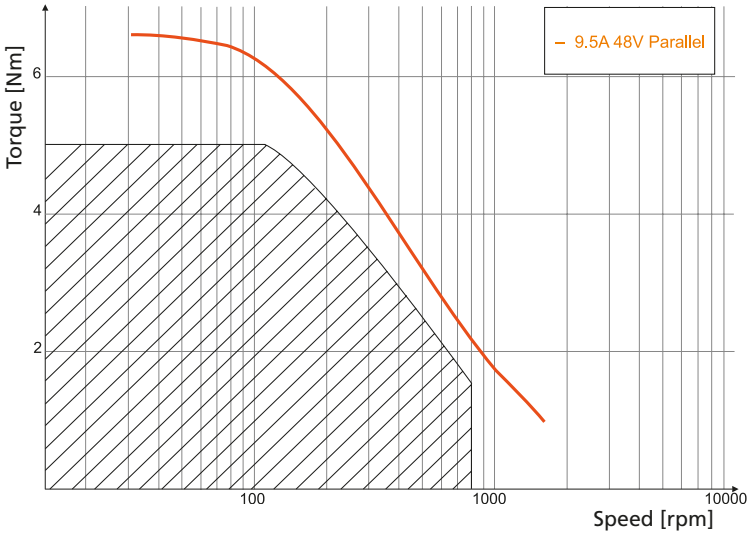


Optimal operating conditions at 48V and continuous operation

Maximum value

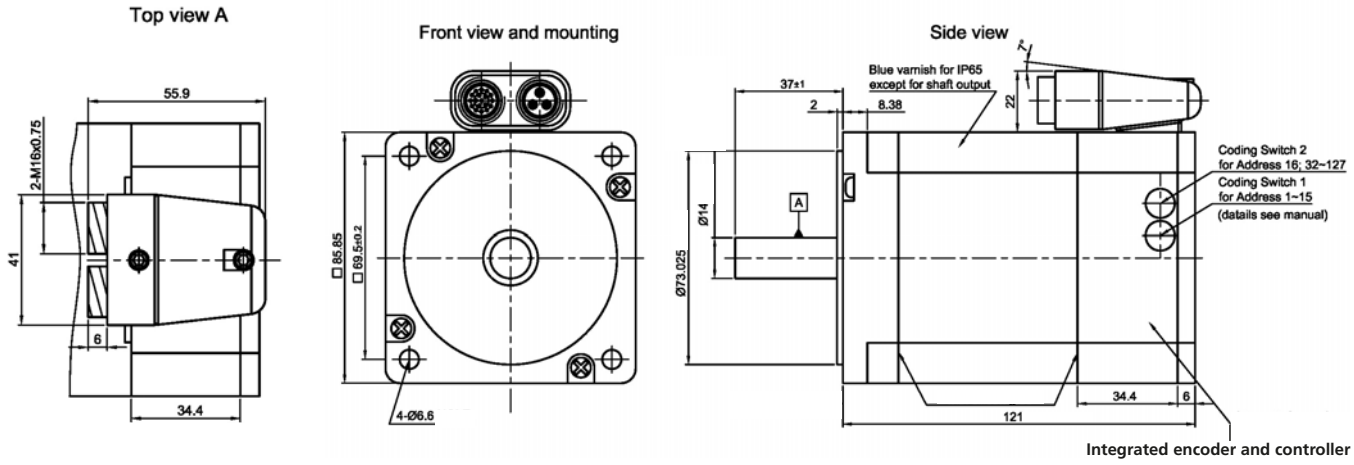

# Stepper motor PD6S - Accessories

## Programming cable



| Code No. | Type | Length |
|---|---|---|
| 957038 | USB auf RS485 | 1,8m |

## Circuit capacitor



| Code No. | Type | |
|---|---|---|
| 957039 | Circuit capacitor 10.000µf / 63V | PD 6S |

## Switching power supply



24V



48V

| Code No. | Type | |
|---|---|---|
| 957035 | Switching power supply 48V / 10A output current | Power electronic PD 6S (1 motor) |
| 957036 | Switching power supply 48V / 20A output current | Power electronic PD 6S (2-3 motors) |
| 957037 | Switching power supply 24V / DC 2,5A | Control electronics PD 6S (1-3 motors) |

## Motor cable / signal cable

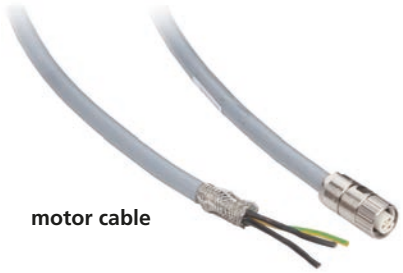

motor cable

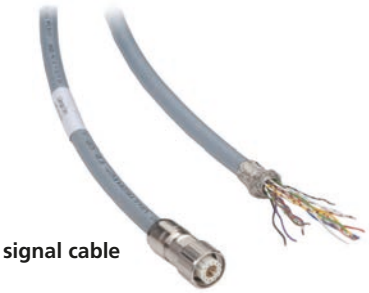

signal cable

| Code No. | Type | |
|---|---|---|
| 957051 _ _ _ | motor cable | PD 6S, choice of lengths |
| 957053 _ _ _ | signal cable | PD 6S, choice of lengths |

**Length:**
0 5 0 = 5,0 m
0 7 5 = 7,5 m
1 0 0 = 10,0 m

## Cables for use in cable drag chains

| Code No. | Type | |
|---|---|---|
| 957052 _ _ _ FLEX | motor cable | PD 6S, choice of lengths |
| 957054 _ _ _ FLEX | signal cable | PD 6S, choice of lengths |

**Length:**
0 5 0 = 5,0 m
0 7 5 = 7,5 m
1 0 0 = 10,0 m

**Note: Other cable lengths on request**

# Servo motors

**Order information:**

- Further motors available on request
- Encoder available as an option.

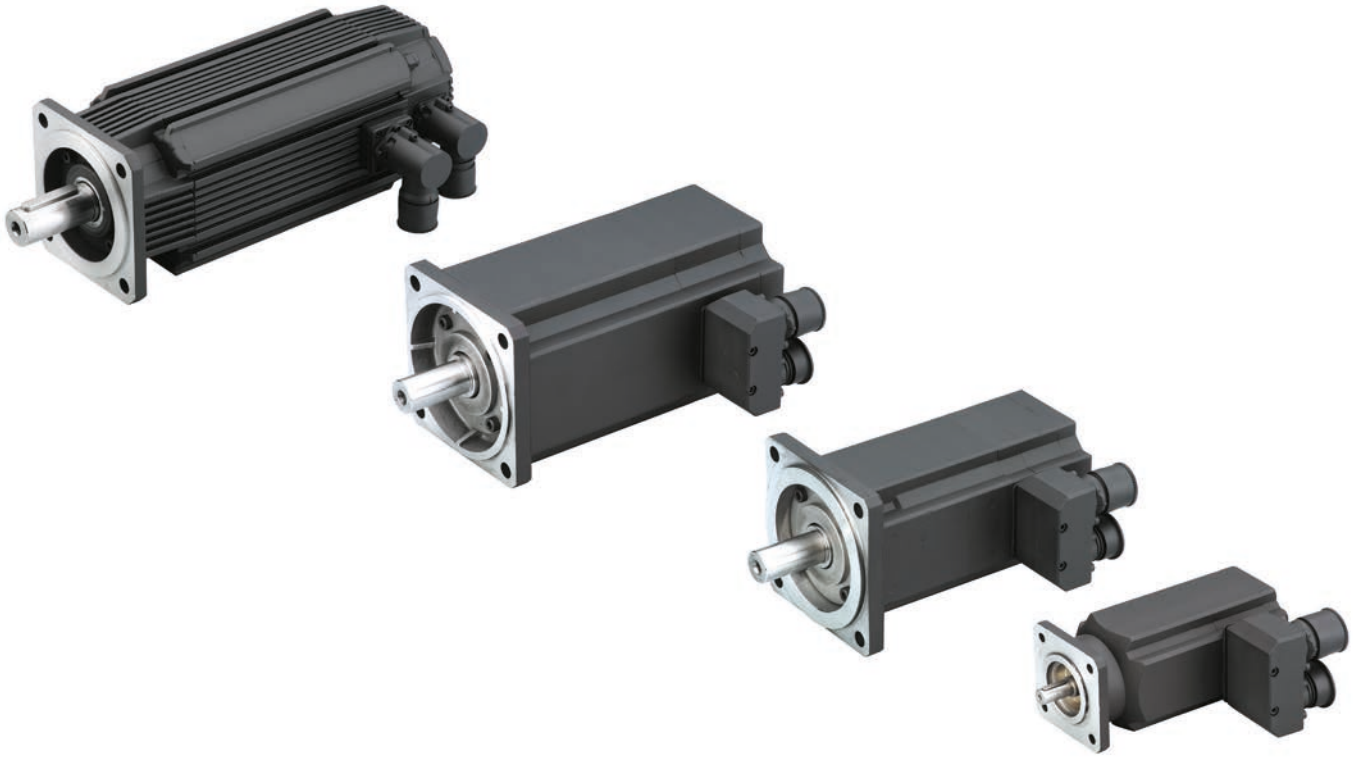

## General information/operating conditions

| Type | | RK-AC 112 | RK-AC 118 | RK-AC 240 | RK-AC 260 | RK-AC 280 | RK-AC 345 | RK-AC 470 | RK-AC 800 | RK-AC 1252 | RK-AC 1776 | RK-AC 2521 |
|---|---|---|---|---|---|---|---|---|---|---|---|---|
| Nominal speed [rpm] | | 6000 | 3300 | 3300 | 4300 | 2500 | 4500 | 3000 | 3000 | 3000 | 3000 | 2000 |
| Torque [Nm] | | 1,12 | 1,18 | 2,4 | 2,6 | 2,8 | 3,45 | 4,7 | 8 | 12,52 | 17,76 | 25,21 |
| Nominal current [A] | | 2,4 | 1,46 | 2,8 | 2,8 | 2,5 | 5,4 | 4,6 | 4,8 | 7,38 | 10,35 | 9,95 |
| Nominal output [KW] | | 0,7 | 0,49 | 0,83 | 1,17 | 0,73 | 1,625 | 1,48 | 2,51 | 3,93 | 5,57 | 5,51 |
| Moment of inertia [kgmm$^2$] | | 30,2 | 30,2 | 140 | 140 | 140 | 336 | 336 | 900 | 1600 | 2150 | 2700 |
| Brake torque [Nm] | | 2,2 | 2,2 | 5 | 5 | 5 | 11 | 11 | 11 | 28 | 28 | 28 |
| Continuous standstill torque [Nm] | | 1,4 | 1,4 | 3 | 3 | 3 | 6 | 6 | 10 | 14,99 | 22,01 | 27,99 |
| Torque constant [Nm/A] | | 0,81 | 0,81 | 0,85 | 0,68 | 1,11 | 0,64 | 1,02 | 1,66 | 1,78 | 1,80 | 2,65 |
| Weight [kg] | without brake | 1,5 | 1,5 | 3,5 | 3,5 | 3,5 | 4,7 | 4,7 | 7,7 | 17,5 | 22,7 | 28 |
| | with brake | 1,8 | 1,8 | 4,2 | 4,2 | 4,2 | 5,3 | 5,3 | 9,7 | 22,5 | 27,7 | 33 |
| Servo motors | without gearbox | | ● | ● | | | | ● | | | | |
| | with gearbox | PLE 60 | | | PLE 80 | PLE 80 | PLE 120 | | PLE 120 | PLE 160 | PLE 160 | PLE 160 |
| Suitable for: | | RK-Control 2S 2,5 A | | RK-Control 2S 6,3 A | | RK-Control 2S 2,5 A | RK-Control 2S 6,3 A | | RK-Control 2S 7,5 A | | RK-Control 2S 15 A | |

## RK-AC 118



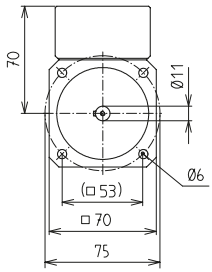


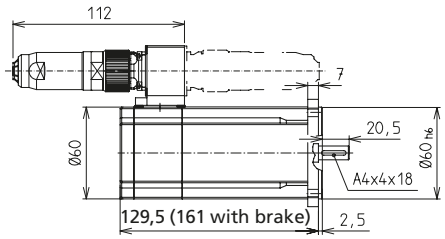


| Code No. | Type |
|---|---|
| 95801 _ 00 SMH | RK-AC 118 |

0 = Standard
1 = with brake

## RK-AC 240

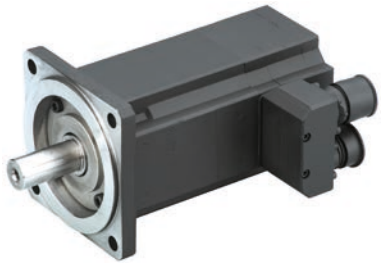

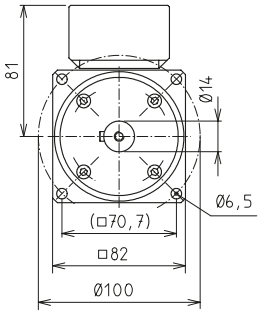


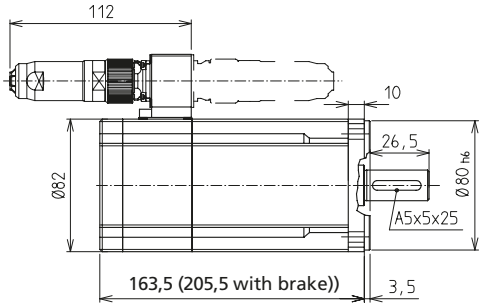


| Code No. | Type |
|---|---|
| 95802 _ 00 SMH | RK-AC 240 |

0 = Standard
1 = with brake

## RK-AC 470

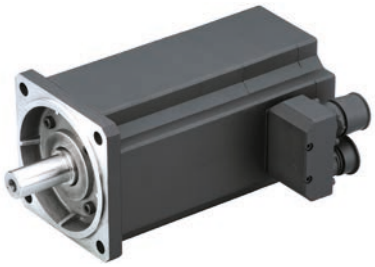

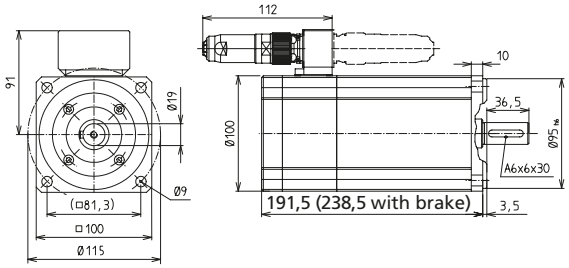


| Code No. | Type |
|---|---|
| 95803 _ 00 SMH | RK-AC 470 |

0 = Standard
1 = with brake

## RK-AC 112



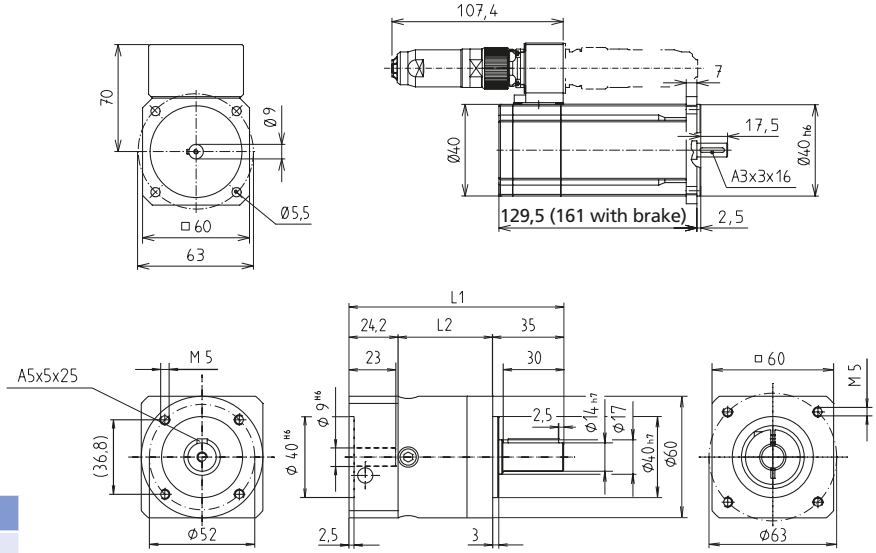


**Gear unit**
**1-step i = 3:1/5:1/8:1**
**2-step i = 9:1/12:1/15:1/20:1/25:1**

| Code No. | Type |
|---|---|
| 95811 _ _ _ SMH | RK-AC 112 |

**Gear selection:**

| | |
|---|---|
| 03 = gear | 3:1 |
| 05 = gear | 5:1 |
| 08 = gear | 8:1 |
| 09 = gear | 9:1 |
| 12 = gear | 12:1 |
| 15 = gear | 15:1 |
| 20 = gear | 20:1 |
| 25 = gear | 25:1 |

0 = Standard
1 = with brake

| PLE 60 | 1-step 3:1 - 8:1 | 2-step 9:1 - 25:1 |
|---|---|---|
| Backlash | < 16 arcmin | < 20 arcmin |
| Max. average input speed | 4.500 $min^{-1}$ | 4.500 $min^{-1}$ |
| L1 | 106 | 118,5 |
| L2 | 47 | 59,5 |

## RK-AC 260

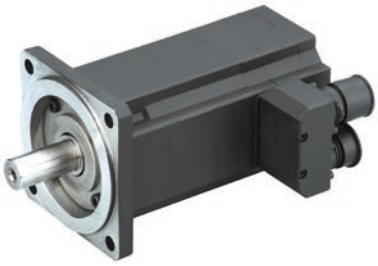

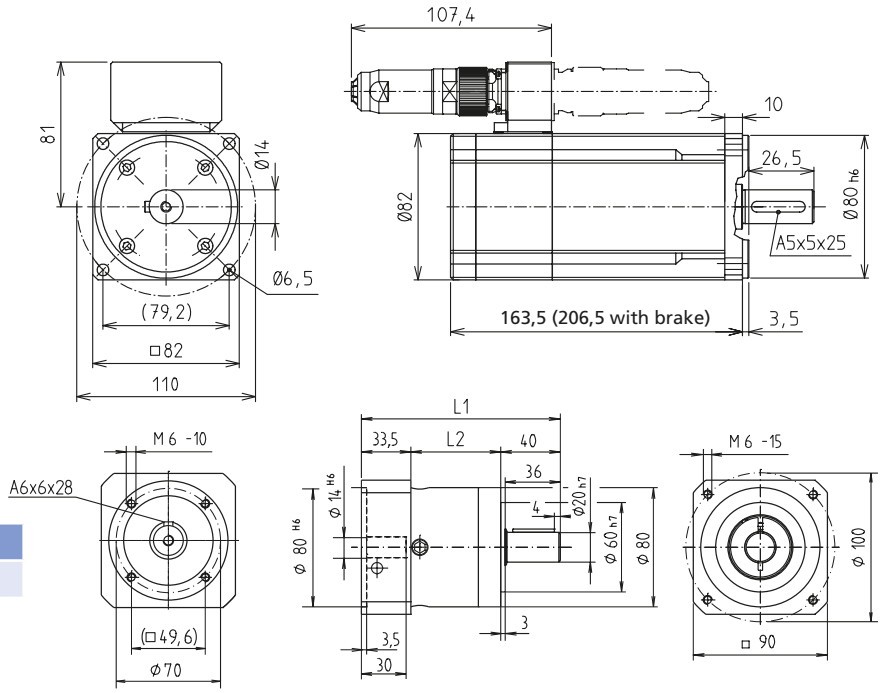


**Gear unit**
**1-step i = 3:1/5:1/8:1**
**2-step i = 9:1/12:1/15:1/20:1/25:1**

| Code No. | Type |
|---|---|
| 95812 _ _ _ SMH | RK-AC 260 |

**Gear selection:**

| | |
|---|---|
| 03 = gear | 3:1 |
| 05 = gear | 5:1 |
| 08 = gear | 8:1 |
| 09 = gear | 9:1 |
| 12 = gear | 12:1 |
| 15 = gear | 15:1 |
| 20 = gear | 20:1 |
| 25 = gear | 25:1 |

0 = Standard
1 = with brake

| PLE 80 | 1-step 3:1 - 8:1 | 2-step 9:1 - 25:1 |
|---|---|---|
| Backlash | < 9 arcmin | < 14 arcmin |
| Max. average input speed | 4.000 $min^{-1}$ | 4.000 $min^{-1}$ |
| L1 | 133,5 | 151 |
| L2 | 60 | 77,5 |

## RK-AC 280

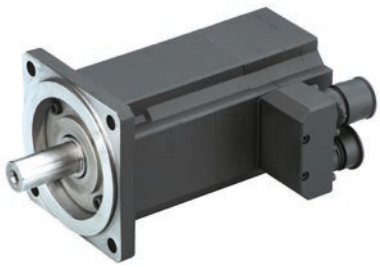

**Gear unit**
**1-step i = 3:1/5:1/8:1**

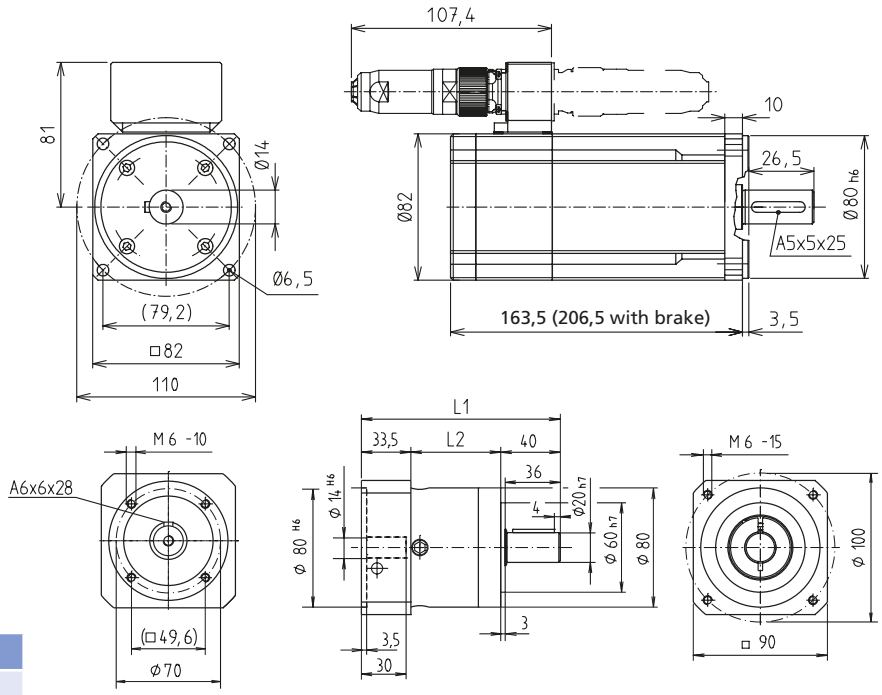


| Code No. | Type |
|---|---|
| 95818___SMH | RK-AC 280 |

**Gear selection:**
03 = gear 3:1
05 = gear 5:1
08 = gear 8:1

0 = Standard
1 = with brake

| PLE 80 | 1-step 3:1 - 8:1 |
|---|---|
| Backlash | < 9 arcmin |
| Max. average input speed | 4.000 $min^{-1}$ |
| L1 | 133,5 |
| L2 | 60 |

## RK-AC 345

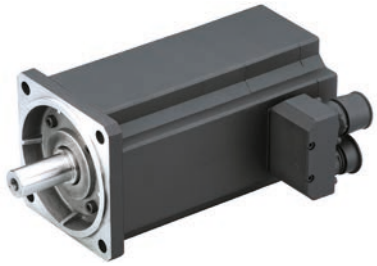

**Gear unit**
**1-step i= 3:1 / 5:1 / 8:1**
**2-step i= 9:1 / 12:1 / 15:1 / 20:1 / 25:1**

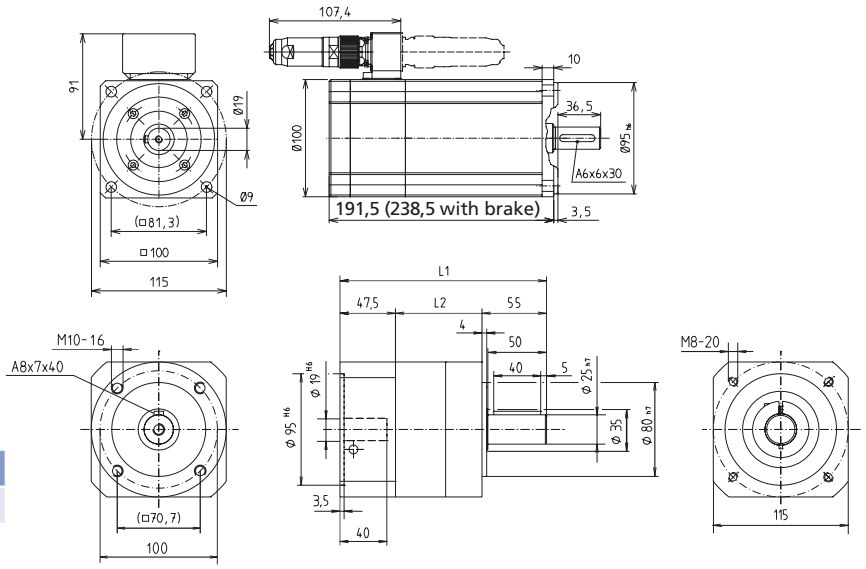


| Code No. | Type |
|---|---|
| 95813___SMH | RK-AC 345 |

**Gear selection:**
03 = gear 3:1
05 = gear 5:1
08 = gear 8:1
09 = gear 9:1
12 = gear 12:1
15 = gear 15:1
20 = gear 20:1
25 = gear 25:1

0 = Standard
1 = with brake

| PLE 120 | 1-step 3:1 - 8:1 | 2-step 9:1 - 25:1 |
|---|---|---|
| Backlash | < 8 arcmin | < 12 arcmin |
| Max. average input speed | 3.500 $min^{-1}$ | 3.500 $min^{-1}$ |
| L1 | 176,5 | 203,5 |
| L2 | 74 | 101 |

## RK-AC 800

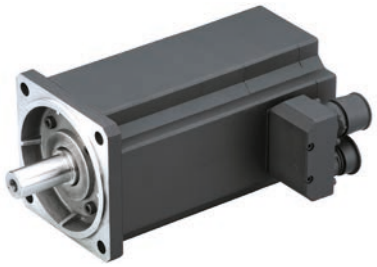

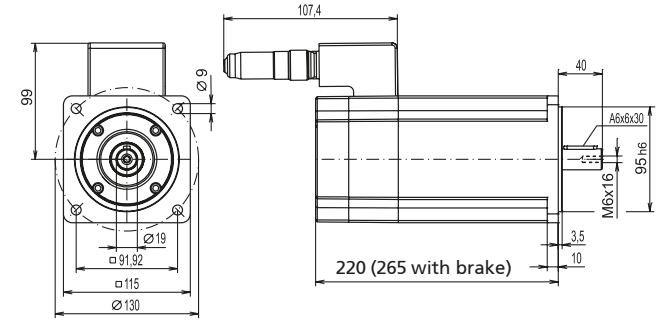


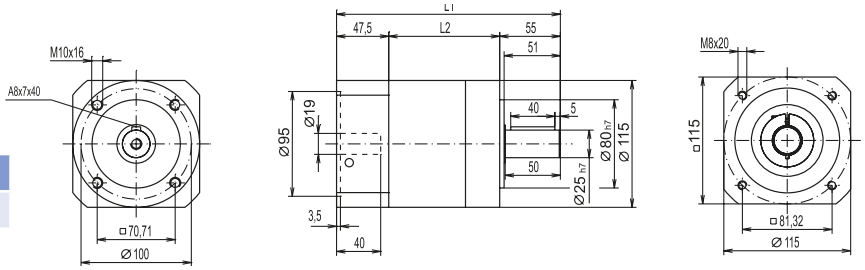


**Gear unit**
**1-step i= 3:1 / 5:1 / 8:1**
**2-step i= 9:1 / 12:1 / 15:1 / 20:1**

| Code No. | Type |
|---|---|
| 95814 ___ SMH | RK-AC 800 |

**Gear selection::**

| | |
|---|---|
| 03 = gear | 3:1 |
| 05 = gear | 5:1 |
| 08 = gear | 8:1 |
| 09 = gear | 9:1 |
| 12 = gear | 12:1 |
| 15 = gear | 15:1 |
| 20 = gear | 20:1 |

0 = Standard
1 = with brake

| PLE 120 | 1-step 3:1 - 8:1 | 2-step 8:1 - 20:1 |
|---|---|---|
| Backlash | < 8 arcmin | < 12 arcmin |
| Max. average input speed | 3.500 $min^{-1}$ | 3.500 $min^{-1}$ |
| L1 | 176,5 | 203,5 |
| L2 | 74 | 101 |

## RK-AC 1252



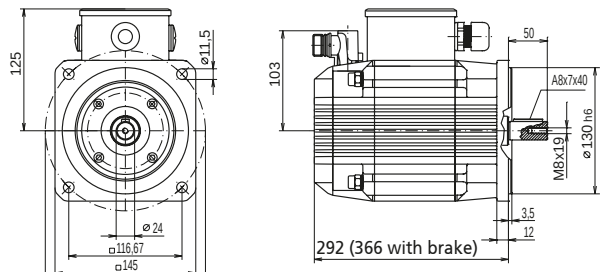


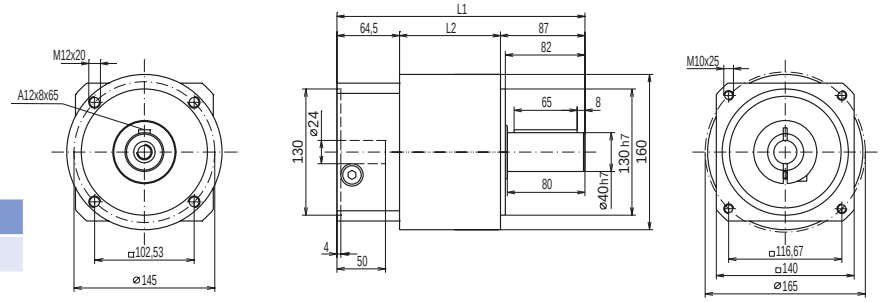


**Gear unit**
**1-step i = 3:1/5:1/8:1**
**2-step i = 9:1/12:1/15:1/20:1**

| Code No. | Type |
|---|---|
| on request | RK-AC 1252 |

| PLE 160 | 1-step 3:1 - 8:1 | 2-step 9:1 - 20:1 |
|---|---|---|
| Backlash | < 6 arcmin | < 10 arcmin |
| Max. average input speed | 1,700-2,900 rpm | 1,950-3,000 rpm |
| L1 | 255.5 | 305 |
| L2 | 104 | 153.5 |

## RK-AC 1776



**Gear unit**
**1-step i = 3:1/5:1/8:1**
**2-step i = 9:1/12:1/15:1/20:1**

| Code No. | Type |
|---|---|
| on request | RK-AC 1776 |

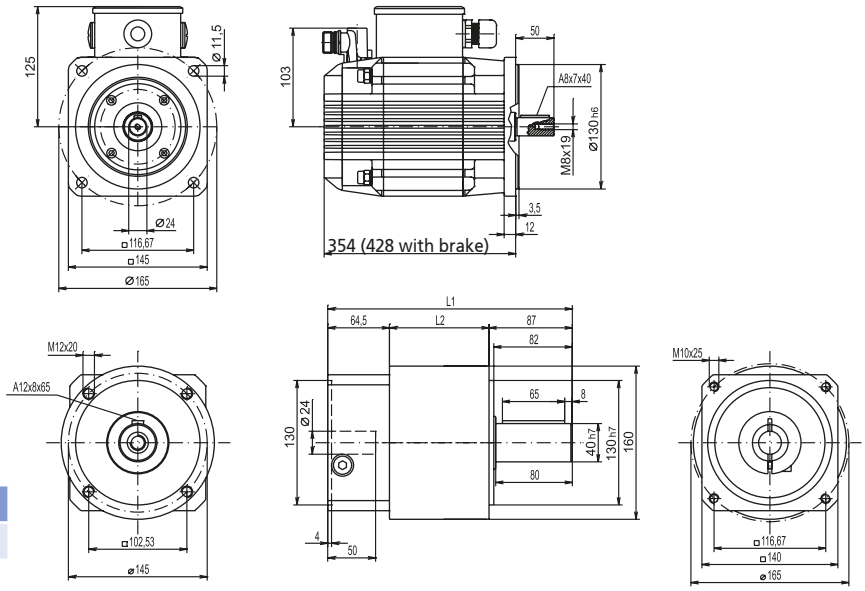


| PLE 160 | 1-step 3:1 - 8:1 | 2-step 9:1 - 20:1 |
|---|---|---|
| Backlash | < 6 arcmin | < 10 arcmin |
| Max. average input speed | 1,700-2,900 rpm | 1,950-3,000 rpm |
| L1 | 255.5 | 305 |
| L2 | 104 | 153.5 |

## RK-AC 2521



**Gear unit**
**1-step i = 3:1/5:1/8:1**
**2-step i = 9:1/12:1/15:1/20:1**

| Code No. | Type |
|---|---|
| on request | RK-AC 2521 |

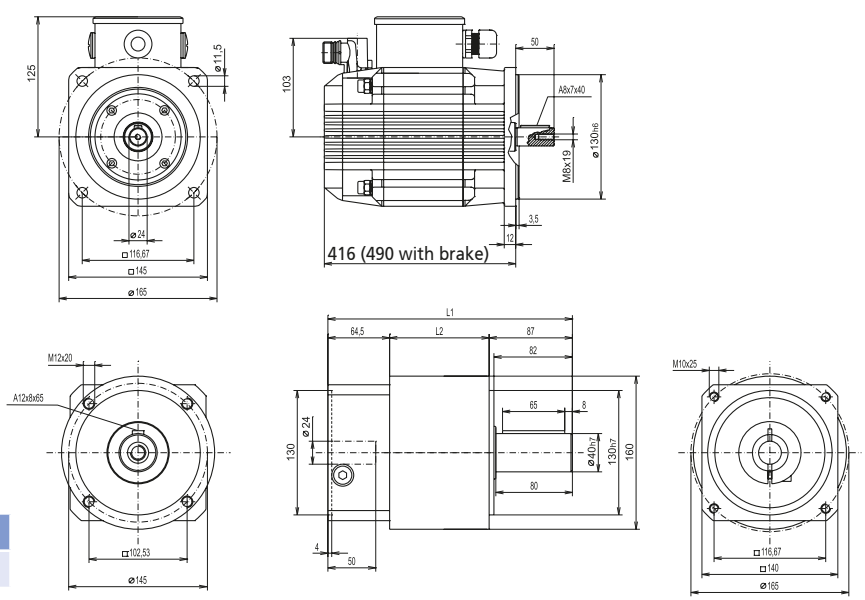


| PLE 160 | 1-step 3:1 - 8:1 | 2-step 9:1 - 20:1 |
|---|---|---|
| Backlash | < 6 arcmin | < 10 arcmin |
| Max. average input speed | 1,700-2,900 rpm | 1,950-3,000 rpm |
| L1 | 255.5 | 305 |
| L2 | 104 | 153.5 |

## Motor cables/resolver cables



| Code No. | Type | |
|---|---|---|
| 95702511 _ _ _ | Motor cable | RK-AC 112-800, choice of lengths |
| 95702611 _ _ _ | Resolver cable | RK-AC 112-800, choice of lengths |

**Length:**
0 2 5 = 2,5 m
0 5 0 = 5,0 m
0 7 5 = 7,5 m
1 0 0 = 10,0 m
1 5 0 = 15,0 m
: :
: :

## Cables for use in cable drag chains

| Code No. | Type | |
|---|---|---|
| 95702511 _ _ _ FLEX | Motor cable | RK-AC 112-800, choice of lengths |
| 95702611 _ _ _ FLEX | Resolver cable | RK-AC 112-800, choice of lengths |

**Length:**
0 2 5 = 2,5 m
0 5 0 = 5,0 m
0 7 5 = 7,5 m
1 0 0 = 10,0 m
1 5 0 = 15,0 m
: :
: :

# Angular gear – Versions

## System 1

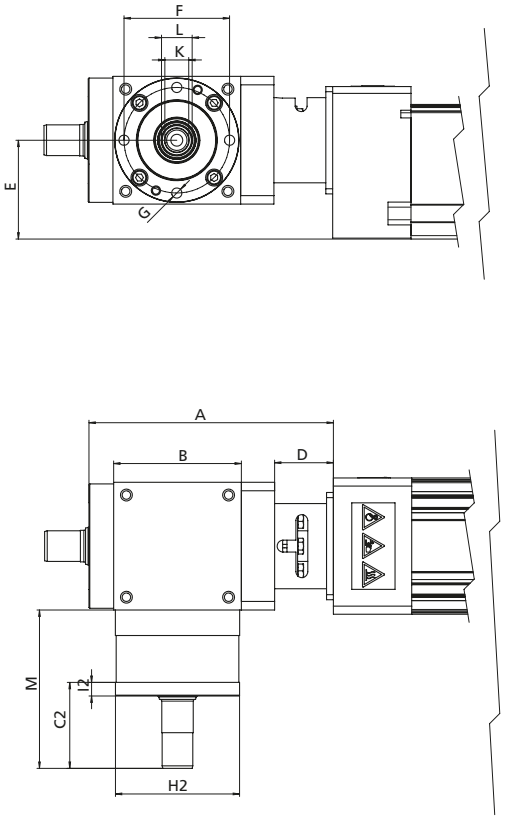


Image shows angular gear on RK DuoLine S

[mm]

| Type | A | B | C2 | D | E | F | G | H2 | I2 | K | L | M |
|---|---|---|---|---|---|---|---|---|---|---|---|---|
| COPAS 20 | 137.5 | □75 | 50.5 | 28.5 | 30 | LKØ62 | 4xM5-9 deep | Ø72.9g6 | 8 | HWIØ14H6 | HWAØ18h8 | 93 |
| COPAS 30 | 143.5 | | | 34.5 | 40 | | | | | | | |
| COPAS 40 | | | | | 50 | | | | | | | |
| PLS 30 | 135 | □75 | 50,5 | 25.5 | 15 | LKØ62 | 4xM5-9 deep | Ø72.9g6 | 8 | HWIØ14H6 | HWAØ18h8 | 93 |
| PLS 40 | 137.5 | | | 28.5 | 20 | | | | | | | |
| PLS 50 | | | | | 25 | | | | | | | |
| PLS 60 | | | | | 30 | | | | | | | |
| PLS 80 | 143.5 | | | 34.5 | 40 | | | | | | | |
| RK DuoLine S 60 | 167.5 | □75 | 50.5 | 58 | 47.7 | LKØ62 | 4xM5-9 deep | Ø72.9g6 | 8 | HWIØ14H6 | HWAØ18h8 | 93 |
| RK DuoLine S 80 | 143.5 | | | 34.5 | 58 | | | | | | | |
| RK DuoLine S 120 | 167 | □110 | | 31.5 | 73.2 | LKØ92 | 6xM6-12 deep | Ø107g6 | | HWIØ20H6 | HWAØ24h8 | 100.5 |
| RK DuoLine S 160 | 170.5 | | | 35 | 78 | | | | | | | |

## System 2

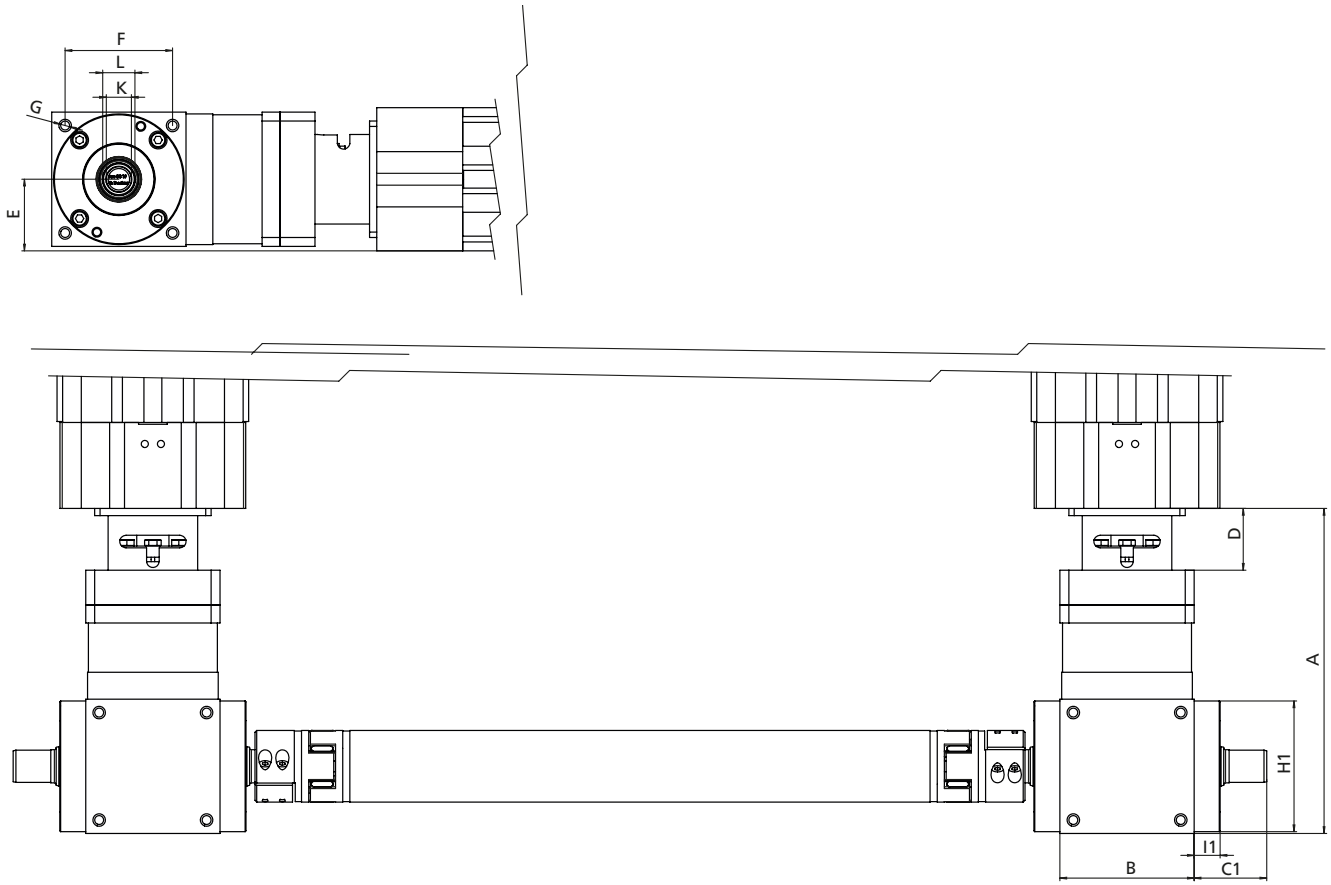


Image shows angular gear on PLS

[mm]

| Type | A | B | C1 | D | E | F | G | H1 | I1 | K | L |
|---|---|---|---|---|---|---|---|---|---|---|---|
| COPAS 20 | 175.7 | □75 | 40.5 | 28.5 | 30 | □60 | 4xM6-12 deep | Ø73h7 | 14.5 | HWIØ14H6 | HWAØ18h8 |
| COPAS 30 | 181.5 | | | 34.5 | 40 | | | | | | |
| COPAS 40 | | | | | 50 | | | | | | |
| PLS 30 | 173 | □75 | 40.5 | 25.5 | 15 | □60 | 4xM6-12 deep | Ø73h7 | 14.5 | HWIØ14H6 | HWAØ18h8 |
| PLS 40 | 175.5 | | | 28.5 | 20 | | | | | | |
| PLS 50 | | | | | 25 | | | | | | |
| PLS 60 | | | | | 30 | | | | | | |
| PLS 80 | 181.5 | | | 34.5 | 40 | | | | | | |
| RK DuoLine S 60 | 205.5 | □75 | 40.5 | 58 | 47.7 | □60 | 4xM6-12 deep | Ø73h7 | 14.5 | HWIØ14H6 | HWAØ18h8 |
| RK DuoLine S 80 | 181.5 | | | 34.5 | 58 | | | | | | |
| RK DuoLine S 120 | 217 | □110 | | 31.5 | 73.2 | □88 | 4xM8-15,5 deep | Ø108h7 | 10 | HWIØ20H6 | HWAØ24h8 |
| RK DuoLine S 160 | 220.5 | | | 35 | 78 | | | | | | |

# Angular gear – Versions

## System 3

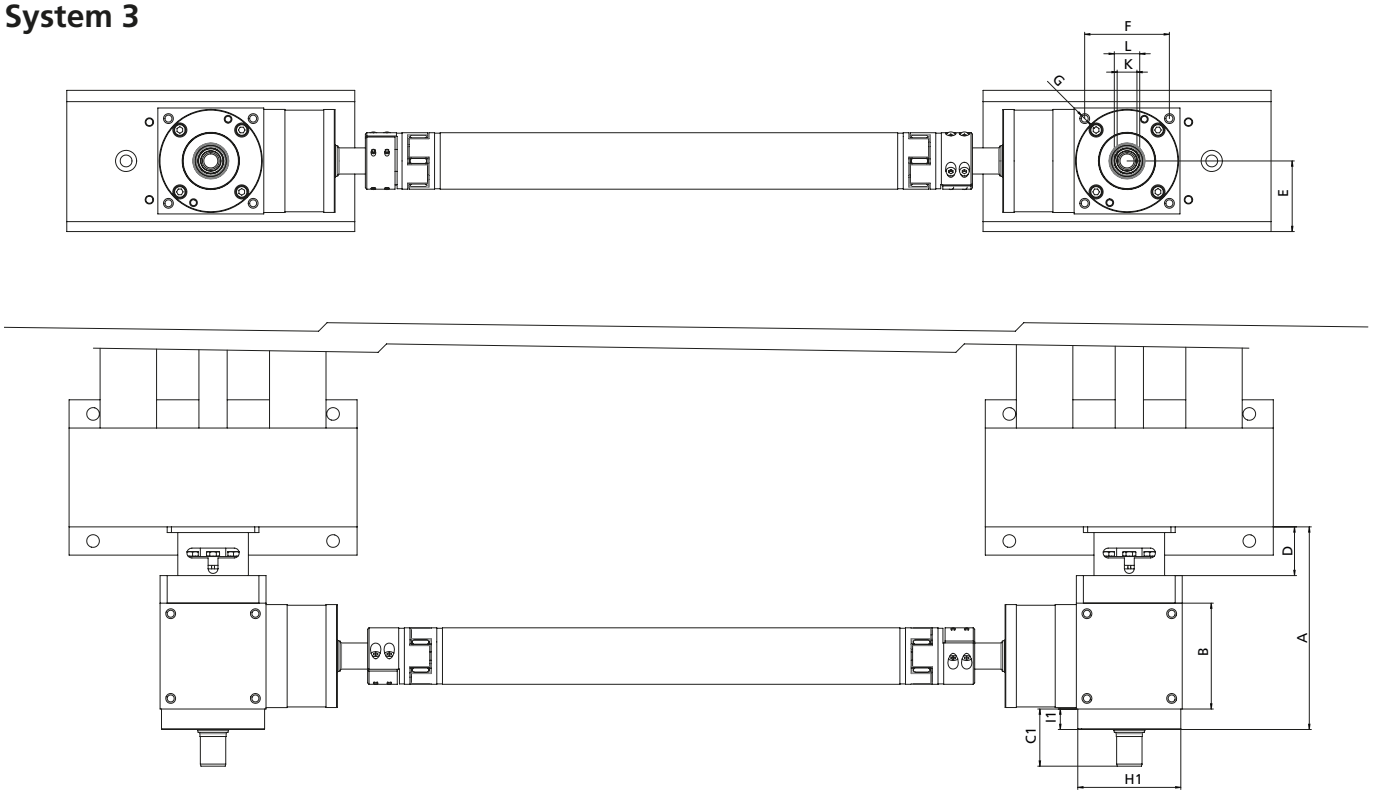


Image shows angular gear on COPAS

[mm]

| Type | A | B | C1 | D | E | F | G | H1 | I1 | K | L |
|---|---|---|---|---|---|---|---|---|---|---|---|
| COPAS 20 | 137.5 | □75 | 40.5 | 28.5 | 30 | □60 | 4xM6-12 deep | Ø73h7 | 14.5 | HWIØ14H6 | HWAØ18h8 |
| COPAS 30 | 143.5 | | | 34.5 | 40 | | | | | | |
| COPAS 40 | | | | | 50 | | | | | | |
| PLS 30 | 135 | □75 | 40.5 | 25.5 | 15 | □60 | 4xM6-12 deep | Ø73h7 | 14.5 | HWIØ14H6 | HWAØ18h8 |
| PLS 40 | 137.5 | | | 28.5 | 20 | | | | | | |
| PLS 50 | | | | | 25 | | | | | | |
| PLS 60 | | | | | 30 | | | | | | |
| PLS 80 | 143.5 | | | 34.5 | 40 | | | | | | |
| RK DuoLine S 60 | 167.5 | □75 | 40.5 | 58 | 47.7 | □60 | 4xM6-12 deep | Ø73h7 | 14.5 | HWIØ14H6 | HWAØ18h8 |
| RK DuoLine S 80 | 143.5 | | | 34.5 | 58 | | | | | | |
| RK DuoLine S 120 | 167 | □110 | | 31.5 | 73.2 | □88 | 4xM8-15,5 deep | Ø108h7 | 10 | HWIØ20H6 | HWAØ24h8 |
| RK DuoLine S 160 | 170.5 | | | 35 | 78 | | | | | | |

## System 4

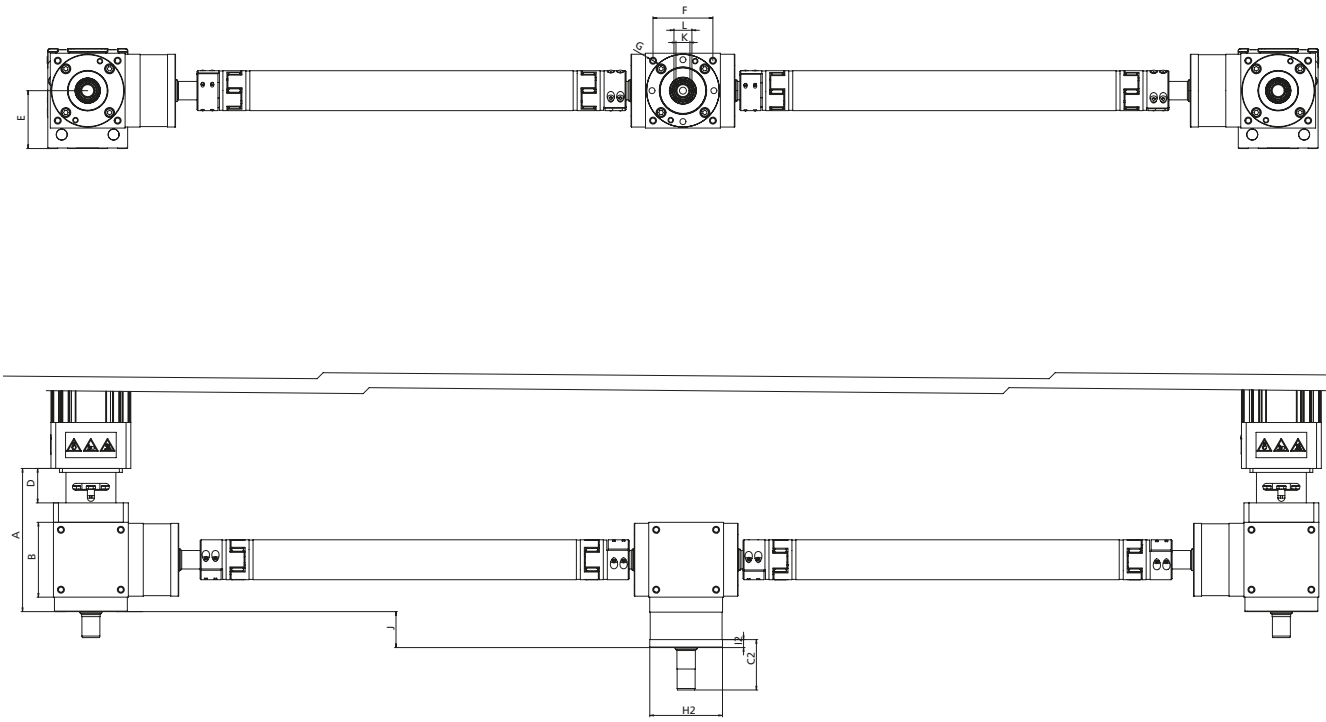


Image shows angular gear on RK DuoLine S

[mm]

| Type | A | B | C2 | D | E | F | G | H2 | I2 | J | K | L |
|---|---|---|---|---|---|---|---|---|---|---|---|---|
| COPAS 20 | 137.5 | □75 | 50.5 | 28.5 | 30 | □60 | 4xM6-12 deep | Ø72.9g6 | 8 | 36 | HWIØ14H6 | HWAØ18h8 |
| COPAS 30 | 143.5 | | | 34.5 | 40 | | | | | | | |
| COPAS 40 | | | | | 50 | | | | | | | |
| PLS 30 | 135 | □75 | 50.5 | 25.5 | 15 | □60 | 4xM6-12 deep | Ø72.9g6 | 8 | 36 | HWIØ14H6 | HWAØ18h8 |
| PLS 40 | 137.5 | | | 28.5 | 20 | | | | | | | |
| PLS 50 | | | | | 25 | | | | | | | |
| PLS 60 | | | | | 30 | | | | | | | |
| PLS 80 | 143.5 | | | 34.5 | 40 | | | | | | | |
| RK DuoLine S 60 | 167.5 | □75 | 50.5 | 58 | 47.7 | □60 | 4xM6-12 deep | Ø72.9g6 | 8 | 36 | HWIØ14H6 | HWAØ18h8 |
| RK DuoLine S 80 | 143.5 | | | 34.5 | 58 | | | | | | | |
| RK DuoLine S 120 | 167 | □110 | | 31.5 | 73.2 | □88 | 4xM8-15.5 deep | Ø107g6 | 8 | 48 | HWIØ20H6 | HWAØ24h8 |
| RK DuoLine S 160 | 170.5 | | | 35 | 78 | | | | | | | |

## Coupling with expansion hub

- Quick and easy assembly
- Motor connection with zero backlash



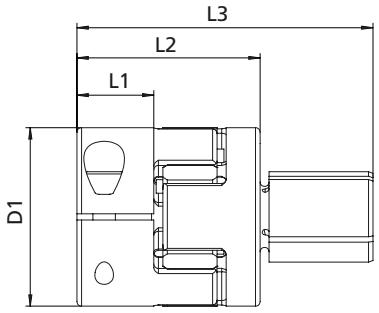


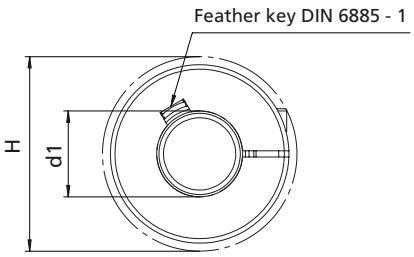


| Code No. | Version for angular gear-systems | d1 [mm] | D1 [mm] | H [mm] | L1 [mm] | L2 [mm] | L3 [mm] | Maximum transmittable torque [Nm] |
|---|---|---|---|---|---|---|---|---|
| 984008 | COPAS 20-40<br>PLS 30-80<br>RK DuoLine 60+80 S | 14 | 39.5 | 43 | 17 | 40 | 65 | 17 |
| 984010 | | 19 | | | | | | |
| 984009 | RK DuoLine 120+160 S | 14 | 39.5 | 43 | 17 | 40 | 65 | 17 |
| 984011 | | 19 | | | | | | |

## Shrink disc

- Clamping to the shaft of the angular gearbox
- Transmission of high torques
- Reducing brushes necessary Reduzierhülsen erforderlich



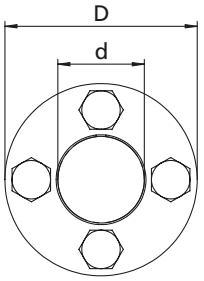


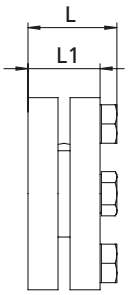


| Code No. | Version for angular gear-systems | L [mm] | L1 [mm] | d [mm] | D [mm] |
|---|---|---|---|---|---|
| 984001 | COPAS 20-40<br>PLS 30-80<br>RK DuoLine 60+80 S | 18,5 | 15 | 18 | 40 |
| 984002 | RK DuoLine 120+160 S | 22,5 | 19 | 24 | 50 |

Torque can be transmitted with a motor shaft diameter of:

| Code No. | 6 mm | 8 mm | 10 mm | 12 mm | 14 mm | 16 mm | 20 mm |
|---|---|---|---|---|---|---|---|
| 984001 | 5 | 4 | 7 | 22 | 64 | | |
| 984002 | | | | | | 49 | 150 |

## Reducing bush



- To adapt gearbox shaft to motor shaft

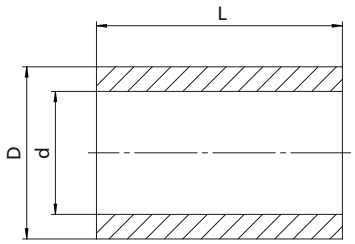


| Code No. | Version for angular gear-systems | d [mm] | D [mm] | L [mm] |
|---|---|---|---|---|
| 984003 | COPAS 20-40<br>PLS 30-80<br>RK DuoLine 60+80 S | 6 | 14 | 20 |
| 984004 | | 8 | | |
| 984005 | | 10 | | |
| 984006 | | 12 | | |
| 984007 | RK DuoLine 120+160 S | 16 | 20 | 24 |

## Hollow shaft insert



- Necessary in combination with couplings clamping radial on the outside of the hollow gearbox shaft

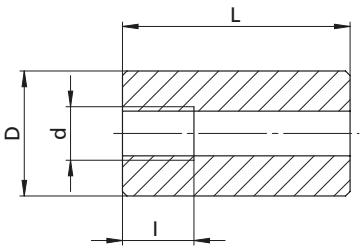


| Code No. | Version for angular gear-systems | d [mm] | l [mm] | D [mm] | L [mm] |
|---|---|---|---|---|---|
| 984013 | COPAS 20-40<br>PLS 30-80<br>RK DuoLine 60+80 S | M6 | 8 | 14h6 | 25,5 |
| 984014 | RK DuoLine 120+160 S | | | 20h6 | 29,5 |

## Torque adapter



- Necessary for tightening the screws of the shrink disc with the correct torque
- For torque wrench with 1/2“ outer square

**Scope of delivery:**
Adapter without torque wrench or socket wrench

| Code No. | Type |
|---|---|
| 984012 | For all angular gear-systems |

**Note:** Further information and instructions can be found at:
**www.rk-rose-krieger.com/english/service/download-documents/technical-manuals/linear-technology/**

## Motor adaptors/couplings for 3-phase motors

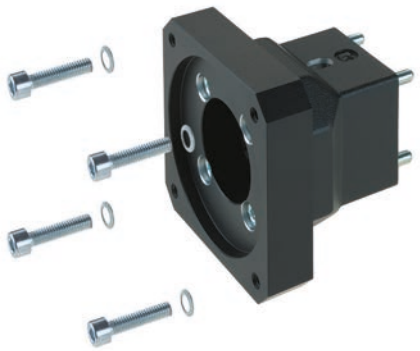

| Type | Three-phase motor | |
|---|---|---|
| | 90/120 W | 180/250 W |
| EP(X) 30 | 949623 | – |
| | 911940 0812 | – |
| EP(X) 40 | 949614 | 949414 |
| | 911430 1212 | 911430 1214 |
| EP(X) 50 | 949614 | 949414 |
| | 911430 1212 | 911430 1214 |
| EP(X) 60 | – | 949616 |
| | – | 911940 1414 |
| EP(X) 80 | – | 949909 |
| | – | 911940 1420 |
| COPAS 20 | 949623 | – |
| | 911940 0812 | – |
| COPAS 30 | 949614 | 949048 |
| | 911430 1012 | 911430 1014 |
| COPAS 40 | 949614 | 949048 |
| | 911430 1212 | 911430 1214 |
| EV 30 | 949603 | – |
| | 910920 0812 | – |
| EV 40 | 94937 | 94916 |
| | 911430 1012 | 911430 1014 |
| EV 50 | 949605 | 94935 |
| | 911940 1212 | 911430 1214 |
| EV 60 | 94976 | 949077 |
| | 911940 1212 | 911430 1214 |

| Type | Three-phase motor | |
|---|---|---|
| | 90/120 W | 180/250 W |
| EV 80 | 94958 | 94940 |
| | 911940 1214 | 911940 1414 |
| PLS 30 | 94981 | – |
| | 910920 0612 | – |
| PLS 40 | 949100 | 949101 |
| | 911430 0812 | 911430 0814 |
| PLS 50 | 949605 | 94935 |
| | 911430 1012 | 911430 1014 |
| PLS 60 | 949107 | 949108 |
| | 911940 1212 | 911430 1214 |
| PLS 80 | 94958 | 94940 |
| | 911940 1214 | 911940 1414 |
| RK DuoLine S 50 | 949981 | 949982 |
| | 911430 0812 | 911430 0814 |
| RK DuoLine S 80 | 949859 | 949858 |
| | 911940 1212 | 911430 1214 |
| DuoLine S 80 x 120 | 949060 | 949061 |
| | 911940 1212 | 911430 1214 |
| PLZ 30 | 94995 | 949948 |
| | 910920 1012 | 911430 1014 |
| PLZ 40 | 94987 | 94988 |
| | 911430 1012 | 911430 1014 |
| PLZ 50 | 94905 | 949527 |
| | 911430 1214 | 911430 1414 |

| |
|---|
| Code No. Motor adaptor: **94976** |
| Code No. Coupling with specification of pin diameter<br>1st end = 12 mm<br>2nd end = 25 mm:<br>**911940 1225** |

For further details of dimensions, please refer to the chapter on the relevant linear unit.

## Motor adaptors/couplings for 3-phase motors

| Type | Three-phase motor | |
|---|---|---|
| | 90/120 W | 180/250 W |
| PLZ 60 | 94956 | 94950 |
| | 911940 1220 | 911940 1420 |
| PLZ 80 | 949329 | 949114 |
| | 912855 1225 | 912855 1425 |
| PLZ-i 30 | 949504 | – |
| | 910920 0612 | – |
| PLZ-i 40 | 949516 | 949517 |
| | 911430 0812 | 911430 0814 |
| PLZ-i 50 | 949526 | 949527 |
| | 911940 1012 | 911940 1014 |
| PLZ-i 60 | 949547 | 949548 |
| | 911940 1212 | 911430 1214 |
| PLZ-i 80 | 949547 | 949567 |
| | 911940 1214 | 911430 1414 |
| SQZ 30 | 94995 | – |
| | 910920 1012 | – |
| SQZ 40, 40 x 80 | 94987 | 94988 |
| | 911430 1012 | 911430 1014 |
| SQZ 60, 60 x 120 | 949029 | 949030 |
| | 911940 1215 | 911940 1415 |
| SQZ 80 x 160 | 94956 | 94950 |
| | 911940 1220 | 911940 1420 |
| SQZ 80 | 949695 | 949697 |
| | 912855 1225 | 912855 1425 |

| Type | Three-phase motor | |
|---|---|---|
| | 90/120 W | 180/250 W |
| SQ MT 30 | 949913 | 949949 |
| | 910920 1012 | 911430 1014 |
| SQ MT 40, 40 x 80 | 949920 | 949921 |
| | 911430 1012 | 911430 1014 |
| SQ MT 50, 50 x 100 | 949928 | 949929 |
| | 911430 1214 | 911430 1414 |
| SQ MT 60, 60 x 120 | 949938 | 949939 |
| | 911940 1220 | 911940 1420 |
| SQ MT 80, 80 x 160 | 949944 | 949945 |
| | 912855 1225 | 912855 2025 |
| LMZ | 949039 | 949114 |
| | 912855 1225 | 912855 1425 |
| DuoLine Z 50 | 949974 | 949975 |
| | 911940 1012 | 911940 1014 |
| DuoLine Z 80 | 949958 | 949959 |
| | 911940 1220 | 911940 1420 |
| DuoLine Z 120 x 80 | 949043 | 949808 |
| | 912855 1225 | 912855 1425 |
| MultiLine | 949968 | 949969 |
| | 912855 1230 | 912855 1430 |

Code No. Motor adaptor:
**949695**

Code No. Coupling with specification of pin diameter
1st end = 12 mm
2nd end = 25 mm:
**912855 1225**

## Motor adaptors/couplings for stepper motors

| Type | Motor | |
|---|---|---|
| | NEMA 17 | NEMA 23 |
| PLM | 91462 | 91472 |
| | 910714 0505 | 910714 0506 |
| RK Compakt 80 | 91301 | 91302 |
| | 910714 0505 | 910714 0506 |
| RK Compakt 120 | 91303 | 91309 |
| | 910714 0505 | 910714 0506 |

Code No. Motor adaptor:
**91472**

Code No. Coupling with specification of pin diameter
1st end = 5 mm
2nd end = 6 mm:
**910714 0506**

## Motor adaptors/couplings for servo motors*

| Type | Servo motor without gear unit | | | Servo motor with gear unit | | |
|---|---|---|---|---|---|---|
| | RK-AC 118 | RK-AC 240 | RK-AC 470 | RK-AC 112 | RK-AC 260<br>RK-AC 280 | RK-AC 345 |
| EP(X) 30 | 949200 | – | – | – | – | – |
| | 911430 0811 | – | – | – | – | – |
| EP(X) 40 | 949201 | 949221 | – | – | – | – |
| | 911430 1112 | 911430 1214 | – | – | – | – |
| EP(X) 50 | 949202 | 949222 | – | – | – | – |
| | 911430 1112 | 911430 1214 | – | – | – | – |
| EP(X) 60 | 949203 | 949223 | 949239 | – | – | – |
| | 911430 1114 | 911940 1414 | 911940 1419 | – | – | – |
| EP(X) 80 | 949901 | 949903 | 949905 | – | – | – |
| | 911940 1120 | 911940 1420 | 911940 1920 | – | – | – |
| COPAS 20 | 949218 | 949328 | 949327 | – | – | – |
| | 911430 0811 | 911940 0814 | 911940 0819 | – | – | – |
| COPAS 30 | 949220 | 949238 | 949084 | – | – | – |
| | 911430 1011 | 911430 1014 | 911430 1019 | – | – | – |
| COPAS 40 | 949220 | 949238 | 949051 | – | – | – |
| | 911430 1112 | 911430 1214 | 911940 1920 | – | – | – |
| EV 30 | 949204 | – | – | – | – | – |
| | 911430 0811 | – | – | – | – | – |
| EV 40 | 949205 | 949280 | – | – | – | – |
| | 911430 1011 | 911430 1014 | – | – | – | – |
| EV 50 | 949206 | 949225 | – | – | – | – |
| | 911430 1112 | 911430 1214 | – | – | – | – |
| EV 60 | 949052 | 949087 | 949080 | – | – | – |
| | 911430 1112 | 911940 1214 | 911940 1219 | – | – | – |
| EV 80 | 949401 | 949226 | 949240 | – | – | – |
| | 911430 1114 | 911940 1414 | 911940 1419 | – | – | – |
| PLS 30 | 949207 | – | – | – | – | – |
| | 911430 0611 | – | – | – | – | – |
| PLS 40 | 949208 | 949227 | – | – | – | – |
| | 911430 0811 | 911430 0814 | – | – | – | – |
| PLS 50 | 949209 | 949228 | – | – | – | – |
| | 911430 1011 | 911430 1014 | – | – | – | – |
| PLS 60 | 949210 | 949229 | 949241 | – | – | – |
| | 911430 1112 | 911940 1214 | 911940 1219 | – | – | – |
| PLS 80 | 949404 | 949230 | 949242 | – | – | – |
| | 911430 1114 | 911940 1414 | 911940 1419 | – | – | – |
| DuoLine S 50 | 949976 | 949978 | – | – | – | – |
| | 911430 0811 | 911430 0814 | – | – | – | – |
| DuoLine S 80 | 949850 | 949852 | 949854 | – | – | – |
| | 911430 1112 | 911940 1214 | 911940 1219 | – | – | – |
| DuoLine S 80x120 | 949053 | 949055 | 949057 | – | – | – |
| | 911430 1112 | 911940 1214 | 911940 1219 | – | – | – |
| PLZ 30 | 949211 | – | – | 949426 | – | – |
| | 910920 1011 | – | – | 911430 1014 | | – |
| PLZ 40 | 949212 | 949231 | – | 949427 | 949428 | – |
| | 911430 1011 | 911430 1014 | – | 911430 1014 | 911940 1020 | – |
| PLZ 50 | 949213 | 949232 | – | 949429 | 949430 | – |
| | 911430 1114 | 911430 1414 | – | 911940 1414 | 911940 1420 | – |
| PLZ 60 | 949214 | 949233 | 949243 | 949431 | 949432 | 949433 |
| | 911940 1120 | 911940 1420 | 911940 1920 | 911940 1420 | 911940 2020 | 912855 2025 |

* Motor adaptors and couplings for servo motors RK-AC 800, RK-AC 1252, RK-AC 1776 and RK-AC 2552 are available on request.

RK ROSE+KRIEGER

## Motor adaptors/couplings for servo motors*

| Type | Servo motor without gear unit | | | Servo motor with gear unit | | |
|---|---|---|---|---|---|---|
| | RK-AC 118 | RK-AC 240 | RK-AC 470 | RK-AC 112 | RK-AC 260<br>RK-AC 280 | RK-AC 345 |
| PLZ 80 | – | 949234 | 949244 | 949434 | 949435 | 949436 |
| | – | 912855 1425 | 912855 1925 | 912855 14225 | 912855 2025 | 912855 2525 |
| PLZ-i 30 | 949501 | – | – | – | – | – |
| | 911430 0611 | – | – | – | – | – |
| PLZ-i 40 | 949510 | 949512 | – | – | – | – |
| | 911430 0811 | 911430 0814 | – | – | – | – |
| PLZ-i 50 | 949520 | 949522 | – | – | – | – |
| | 911430 1011 | 911430 1014 | – | – | – | – |
| PLZ-i 60 | 949540 | 949542 | 949544 | – | – | – |
| | 911430 1112 | 911940 1214 | 911940 1219 | – | – | – |
| PLZ-i 60 | 949540 | 949542 | 949544 | – | – | – |
| | 911430 1112 | 911940 1214 | 911940 1219 | – | – | – |
| PLZ-i 80 | – | 949560 | 949562 | – | – | – |
| | – | 911940 1414 | 911940 1419 | – | – | – |
| SQZ 30 | 949215 | – | – | – | – | – |
| | 911430 1011 | – | – | – | – | – |
| SQZ 40<br>40x80 | 949216 | 949235 | – | 949438 | 949439 | – |
| | 911430 1011 | 911430 1014 | – | 911430 1014 | 911940 1020 | – |
| SQZ<br>80x160 | 949217 | 949236 | 949245 | 949440 | 949441 | 949442 |
| | 911430 1115 | 911940 1415 | 911430 1519 | 911940 1415 | 911940 1520 | 912855 2025 |
| SQZ<br>80x16 | – | 949237 | 949246 | 949443 | 949444 | 949445 |
| | – | 911940 1420 | 911940 1920 | 912855 1420 | 912855 2020 | 912855 2025 |
| SQZ 80 | – | 949683 | 949687 | 949681 | 949685 | 949686 |
| | – | 912855 1425 | 912855 1925 | 912855 1425 | 912855 2025 | 912855 2525 |
| SQ MT 30 | 949910 | – | – | – | – | – |
| | 911430 1011 | – | – | – | – | – |
| SQ MT 40<br>40x80 | 949915 | 949917 | – | – | – | – |
| | 911430 1011 | 911430 1014 | – | – | – | – |
| SQ MT 60<br>60x120 | 949922 | 949924 | – | – | – | – |
| | 911430 1114 | 911430 1414 | – | – | – | – |
| SQ MT 60<br>60x120 | 949930 | 949932 | 949934 | – | – | – |
| | 911430 1120 | 911940 1420 | 911430 1920 | – | – | – |
| SQ MT 80<br>80x160 | – | 949940 | 949942 | – | – | – |
| | – | 912855 1425 | 912855 1925 | – | – | – |
| LMZ | – | 949037 | 949038 | 949449 | 949450 | 949451 |
| | – | 912855 1425 | 91285 1925 | 912855 1425 | 912855 2025 | 912855 2525 |
| DuoLine Z<br>50 | 949971 | – | – | 949452 | – | – |
| | 911940 1011 | – | – | 911430 1014 | – | – |
| DuoLine Z<br>80 | – | 949952 | 949954 | 949453 | 949454 | – |
| | – | 911940 1420 | 911940 1920 | 911940 1420 | 911940 2020 | – |
| DuoLine Z<br>120x80 | – | 949041 | 949042 | 949455 | 949456 | 949457 |
| | – | 912855 1425 | 912855 1925 | 912855 1425 | 912855 2025 | 912855 2525 |
| MultiLine | – | 949962 | 949964 | 949446 | 949447 | 949448 |
| | – | 912855 1430 | 912855 1930 | 912855 1430 | 912855 2030 | 912855 2530 |

Code No. Motor adaptor:
**949962**

Code No. Coupling with specification of pin diameter
1st end = 14 mm
2nd end = 30 mm:
**912855 1430**



For further details of dimensions, please refer to the chapter on the relevant linear unit.

# Converters and controls for linear actuators




**FW 3-phase frequency converter**

✓ Supports full Profibus connection




**RK-Control servo technology**

✓ Innovative and flexible device technology

## Features:

**FW 3-phase frequency converter**

- Supports full Profibus connections
- Includes all components required for operation of three-phase motors - pre-wired and ready for connection

## Features:

**RK-Control servo technology**

- Can be tailored to your applications
- Ideal drive controller for dynamic and high-precision single and multiple solutions
- Reliable and cost-effective solutions

# Converters and controls for linear actuators - Table of contents


## FW 3-phase frequency converter

- Description/operating conditions ..... 559
- Application example ..... 561
- Accessories ..... 560

## RK-Control 2S servo technology

- Description ..... 562
- Performance classes/sizes ..... 563
- Order data/versions ..... 571
- Safety technology ..... 565
- Device technology ..... 566
- Function description ..... 568
- Accessories ..... 572

# FW 3-phase frequency converter

## Frequency converter 120/250 W

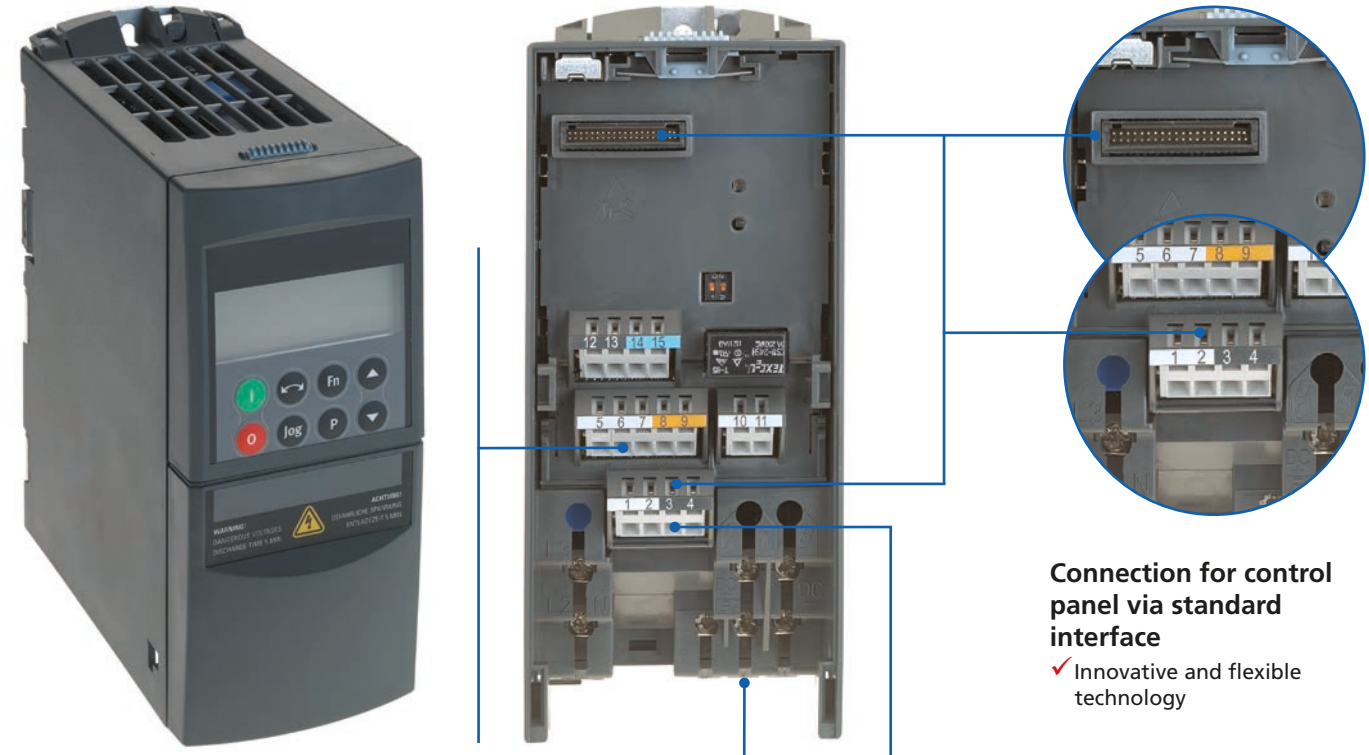


**Connection for control panel via standard interface**

✓ Innovative and flexible technology

**Digital inputs and outputs**

**Motor connection**

✓ Low-noise motor

**Analogue input**

✓ Frequency control

### Features:

- Manual operation via front panel or I/O
- Parameter input via front panel
- Integrated EMI filter (class A)
- Simple commissioning due to self adjusting
- Programmable acceleration/ deceleration
- 3 programmable isolated digital inputs (e.g. for fixed frequencies)
- Integrated serial interface RS485 (USS protocol)
- Analogue output/input
- Storage of 7 fixed frequencies

### Options:

- Separate plain text control panel available with multiple languages (optional)
- Various adaptors available on request

## General information/operating conditions

| | |
|---|---|
| Voltage | 230 V AC (47-63 Hz) |
| Output frequency | 0-650 HZ |
| Frequency resolution | 0.01 |
| Overload capability | 150% for 60 s |
| Interfaces | RS485 analogue 0-10 V, various fieldbuses (optional), RS232 (optional) |
| Protection class | IP 20 |
| Dimensions H x W x D | 147 x 73 x 141 mm |
| Ambient temperature | -10°C to +50°C |

## Frequency converter 120/250 W

| Code No. | Type | Version* |
|---|---|---|
| 957500 | Frequency converter FW 120 | for motors 90 and120 W |
| 957501 | Frequency converter FW 250 | for motors 180 and 250 W |

* Other outputs available on request

## Motor for cable drag chains





| Code No. | Type | |
|---|---|---|
| 957050 _ _ _ | Motor cable 4 x 1.5 + 2 x (2 x 0.75) mm | for connection to a frequency converter; range of lengths |

**Length:**
0 2 5 = 2.5 m
0 5 0 = 5.0 m
0 7 5 = 7.5 m
1 0 0 = 10.0 m
1 2 5 = 12.5 m
1 5 0 = 15.0 m
2 0 0 = 20.0 m
2 5 0 = 25.0 m

## Plain text control panel

- Upload/Download
- Storage of up to 10 parameter records of the frequency converters
- Up to 31 frequency converters can be controlled via RS485 (USS protocol) using a plain text control panel
- Switch between multiple languages

| Code No. | Type |
|---|---|
| 957510 | Plain text control panel |

## Profibus module

- Supports full connection to Profibus (≤ 12 V baud)
- Optional external supply with 24 V DC
- Connection via 9-pin SUB-D connector, customer-supplied

| Code No. | Type |
|---|---|
| 957513 | Profibus module |

## PC converter

- Control of a frequency converter directly from PC
- Connection via 9-pin SUB-D connector, included in assembly kit
- RS232 standard cable (3 m)

| Code No. | Type |
|---|---|
| 957512 | PC converter (assembly kit) |

## Application example FW120/250
## EHL simulation for special performance requirements or speeds

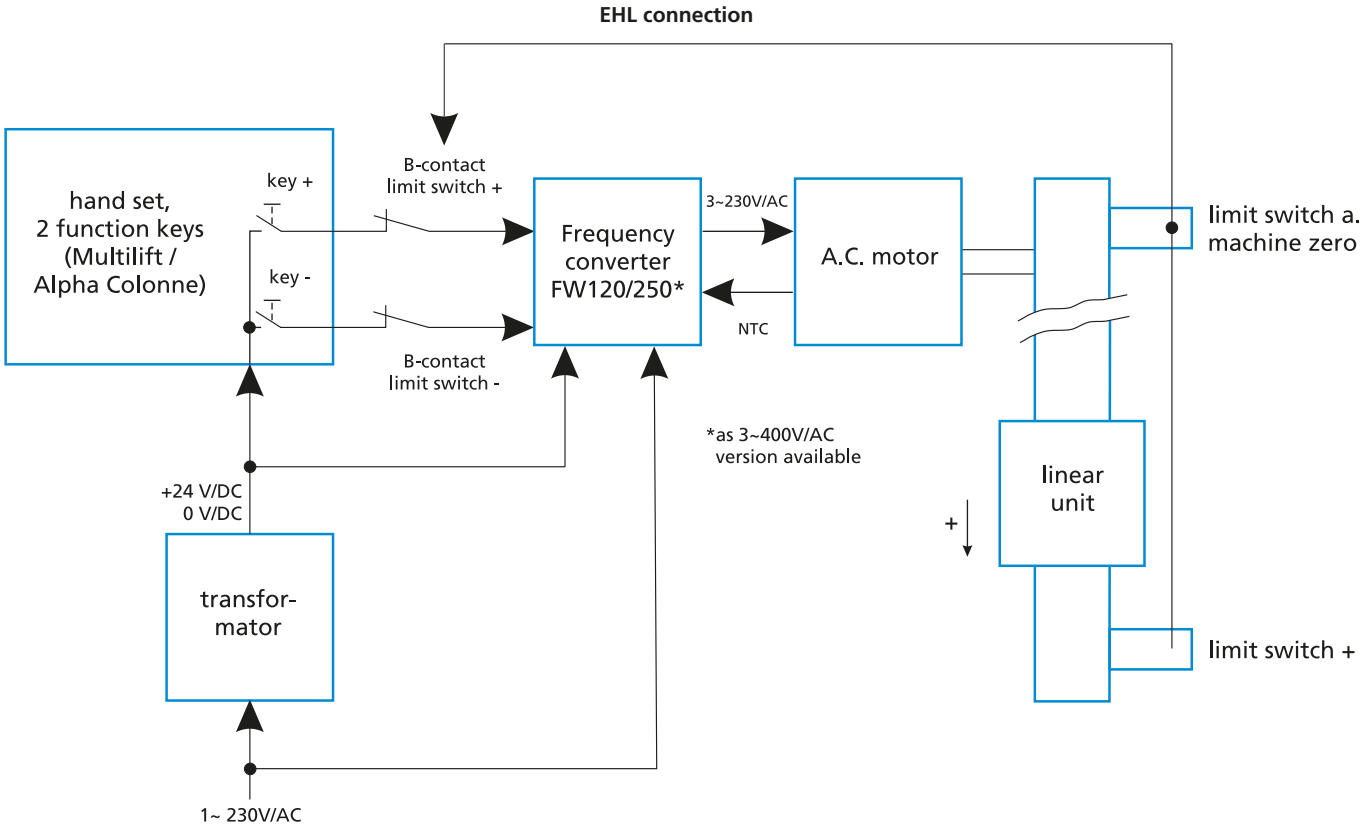


- The frequency converter FW 120 or 250 is supplied via the transformer 24 V DC
- Two digital inputs are set on the frequency converter via the 2-key hand switch (1 x clockwise rotation, 1 x anticlockwise rotation)
- 2 types of speed setpoints:

  1) a fixed frequency set on the frequency converter
  2) (4.7 kiloohms, customer-supplied, infinitely variable frequency through to max. speed) controlled via potentiometer

Pressing the "+" key on the hand switch, moves the carriage in the + direction as far as the + limit switch, at most. The NC contact in the limit switch interrupts the hand switch signal. Then only return travel in the opposite direction is possible. We recommend the use of limit switches in order to prevent damage to the linear unit, the motor and the frequency converter.

The application example is based on the use of standard components and offers a cost-effective unit for simple movement tasks. Alternatively, you can also connect a 4-key hand switch. This provides two speeds in each direction.

# RK-Control 2S

## Innovative and flexible technology for dynamic and high-precision single and multiple solutions




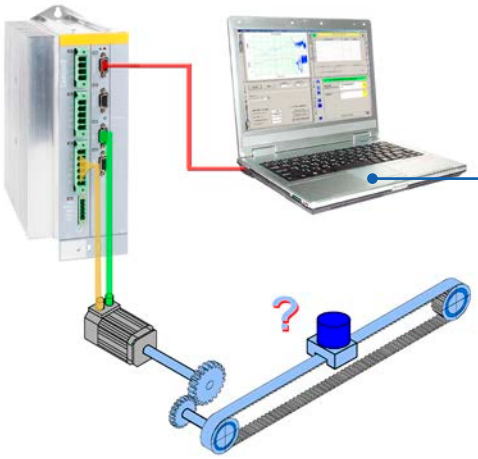

**Commissioning and control optimisation**



Motor manager

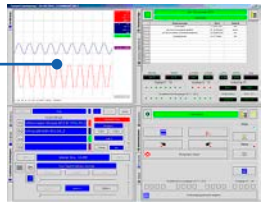

Control optimisation

### Features:

- Quick and easy run in
- Guided parameterization
- All connections located on the front
- Optimally co-ordinated performance classes and technology functions
- Increased lifetime due to jerk-limited setpoint generation
- Low development costs due to safety technology
- Optimum motion control – minimal lag error
- Internal network filter
- Run in software included free of charge

## Standard

- 8 digital inputs/4 digital outputs
- RS232/RS485 interface
- 2 analogue inputs
- 2 analogue outputs
- CE, UL, cUL

## Enhancements

- Optimally co-ordinated technology functions
- Expansion with an additional 12 inputs/outputs (input and output both freely configurable)
- Supports all standard fieldbuses

## Performance levels

| Device: RK-Control 2S | Current [$A_{rms}$] $I_{cont}$ | Current [$A_{rms}$] $I_{peak}$ (< 5 s) | Line voltage ± 10%, 50-60 Hz | Output [kVA] | Suitable for: servo motors |
|---|---|---|---|---|---|
| 2.5 A | 2.5 | 5.5 | 1 * 230/240 VAC | 1.0 | RK-AC 112, 118 and 210 |
| 6.3 A | 6.3 | 12.6 | | 2.5 | RK-AC 240, 260, 345 and 470 |
| 7.5 A | 7.5 | 15 | 3 * 400/480 VAC | 6.2 | RK-AC 800, 1252 |
| 15 A | 15 | 30 | | 11.5 | RK-AC 2521, 1776 |

## Size/weight

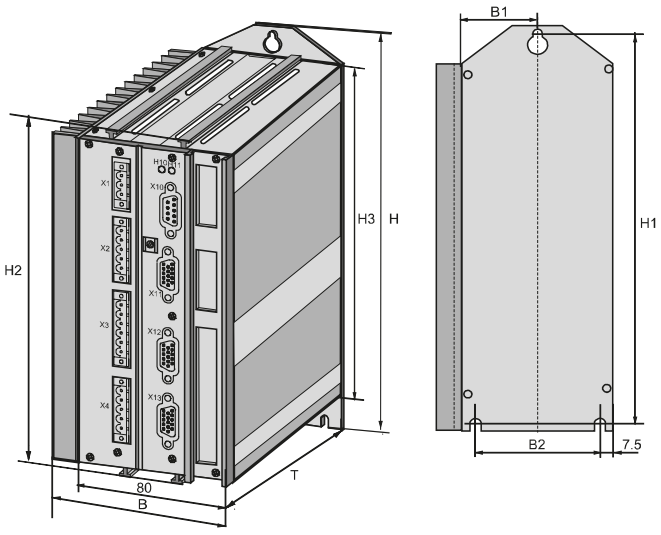


[mm]

| Device: RK-Control 2S | Dimensions H | B | T | H2 | H3 | Clearances B1 | B2 | H1 | Weight [kg] |
|---|---|---|---|---|---|---|---|---|---|
| 2.5 A | 222 | 84 | 172 | 203 | 191 | 40 | 65 | 210 | 2.0 |
| 6.3 A | 222 | 100 | 172 | 203 | 191 | 40 | 65 | 210 | 2.5 |
| 7.5 A | 279 | 115 | 172 | 259 | 248 | 40 | 65 | 267 | 4.3 |
| 15 A | 279 | 158 | 172 | 259 | 248 | 39 | 80 | 267 | 6.8 |

## Connection to superordinated controls

Connection can be implemented via digital inputs and outputs.

| Digital inputs/outputs |
|---|
| The digital I/Os can be expanded by a further 12 I/Os (optional). This enables control of the full range of 31 motion functions, instead of just the 3 motion functions (e.g. • positions). |

**In addition, the following fieldbus types are also supported:**

| Profibus | |
|---|---|
| Profibus – characteristics | |
| DP versions: | DPV0/DPV1 |
| Baud rate: | Up to 12 MHz |
| Profibus ID: | C320 |

| CANopen | |
|---|---|
| CANopen – characteristics | |
| Baud rate [kBit/s]: | 20 ... 1000 |
| Service Data Object: | SDO1 |
| Process Data Objects: | PDO1, ... PDO4 |

| DeviceNet | |
|---|---|
| DeviceNet – characteristics | |
| I/O - data: | up to 32 byte |
| Baud rate [kBit/s]: | 125 ... 500 |
| Participants: | up to 63 slaves |

| Powerlink | |
|---|---|
| Ethernet Powerlink – characteristics | |
| Baud rate: | 100 Mbits (FastEthernet) |
| Cycle time: | 1 ms |

| EtherCAT | |
|---|---|
| EtherCAT – characteristics | |
| Baud rate: | 100 Mbits (FastEthernet) |
| Cycle time: | 1 ms |

## Safety technology

The standard EN ISO 13849-1 introduced the term Performance Levels for the design of safety-relevant controls. In compliance with the safety category 3 PL d as defined in EN ISO 13849-1, the RK Control 2S can be used for the following functions:

**Safe standstill function (zero-torque drive)**

- Safe Torque Off (STO)

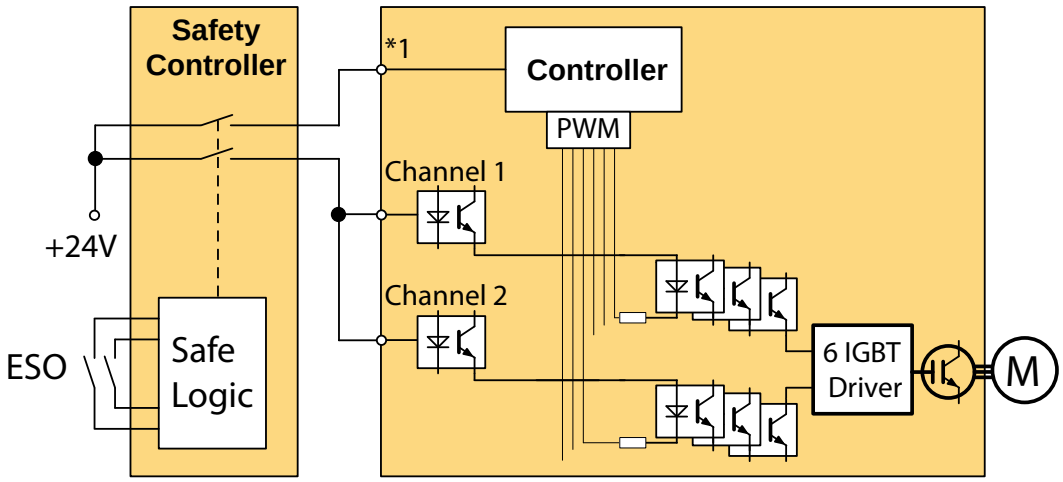


## STO function on RK-Control 2S

In combination with an external emergency stop module (optional), the STO function on the RK Control 2S can be implemented as illustrated.

All safety motion functions require the use of a special external safety module SMX11 with the RK-Control 2S in conjunction with high-resolution absolute value encoders in the servo motors.

The SMX11 safety module and servo motors with absolute value encoders are available on request.

## Safe movement functions

- Safe Torque Off, STO
- Safe Stop 1, SS1
- Safe Stop 2, SS2
- Safe Limited Speed, SLS
- Safe Operating Stop, SOS
- Safe Limited Increment SLI
- Safe Direction, SDI

# RK-Control 2S – Drive/positioning

## Device technology

### Functions: positioning version

With its generally analogue interface, or alternatively step/direction orencoder actuating signals, the RK-Control 2S offers simple and cost-effective access to the world of servo drive technology. The central control unit, e.g., PLC or PC, remains the same. This means that the RK-Control 2S is the ideal way to migrate from analogue ± 10 V drives to intelligent digital servo drives.

### You can choose from a range of operating modes:

#### ± 10 V - input

- ± 10 V set speed with encoder simulation as actual position feedback
- ± 10 V set current with encoder simulation as actual position feedback and configurable locking functions

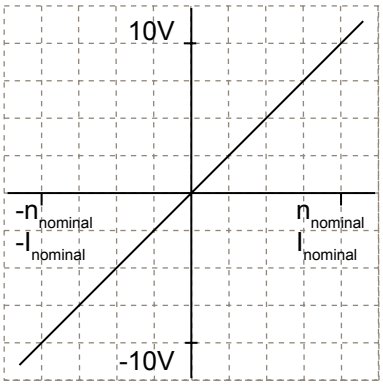


#### Step/direction input

- Step/direction signals as 24 V level or
- Step/direction signals in accordance with RS422

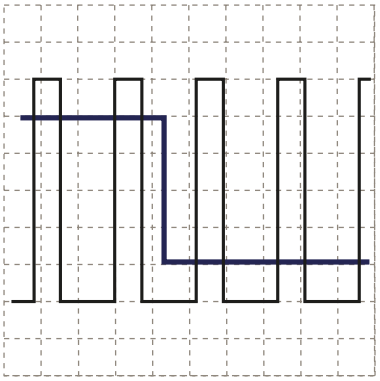

#### Encoder input

- RS422
- 24 V level

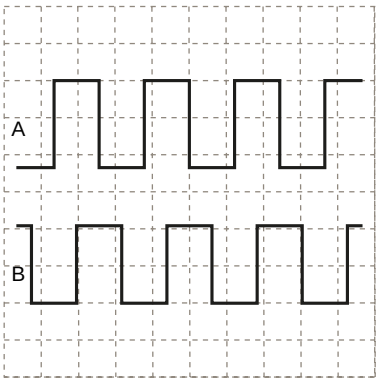

## Functions: positioning version

Due to its excellent functionality, the positioning version of RK-Control 2S forms an ideal basis for many applications in high-performance motion automation.

- Up to 31 motion functions can be created with the supplied PC software.
- The number of the available motion functions depends on the optional extension of the selected or unselected digital inputs and outputs.
- Storage of the motion profiles is non-volatile
- Adjustable jerk limitation
- Optional expansion of digital inputs/outputs
- Comprehensive selection of machine zero modes for adaptation of the RK-Control 2S for your application

## Motion control via inputs/ outputs or serial

- Up to 31 motion functions via set table
- Status bits for each motion set

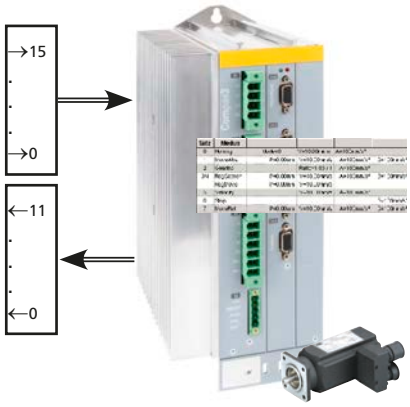


Via digital inputs and outputs

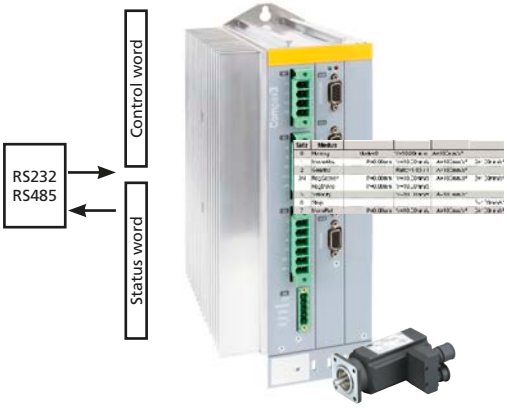


Via RS232/RS 485 by means of control and status word

## Motion control via field bus

- Direct set specification via bus telegram or
- set selection (31 motion functions in set table)
- Status bits for each motion set
- Operating modes:
  - –Speed controller
  - –Direct positioning
  - –Positioning with set selection
- Profile-compliant via Profibus, CANopen, DeviceNet, Ethernet Powerlink, EtherCAT

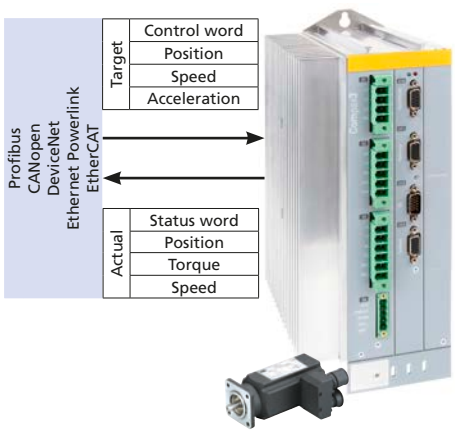

## Motion functions of positioning version

### Absolute/relative positioning
MoveAbs and MoveRel

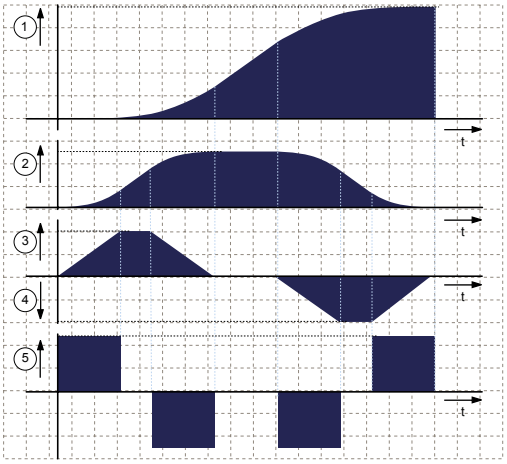


**A motion set defines a complete movement with all configurable parameters:**

- (1) Target position
- (2) Traversing speed
- (3) Maximum acceleration
- (4) Maximum delay
- (5) Maximum jerk

### Dynamic positioning

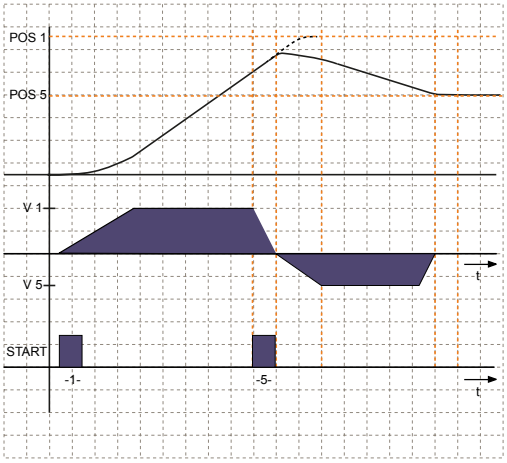


- During positioning, you can switch to a new motion profile – the transition is dynamic.

### Electronic gears
Gearing

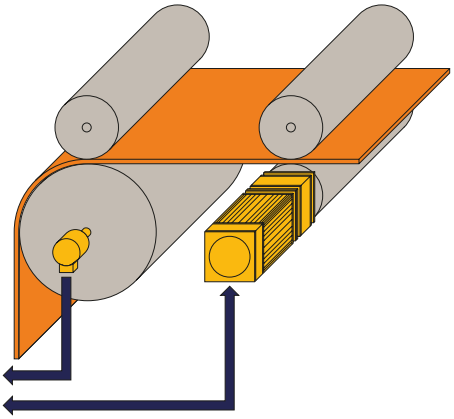

**Synchronisation of two linear units via:**

- Encoder simulation at the master and
- encoder input at the slave
- Motion synchronised to a leading axis with any
- transmission ratio
- ± 10 V analogue input
- Step/direction input
- Encoder input

## Registration mark-related positioning
Reg Search, RegMove

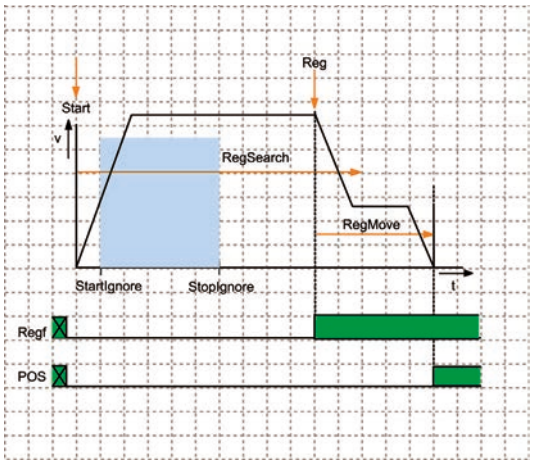


**2 motions are defined for registration mark-related positioning:**

- **RegSearch:** Search for an external signal – from a registration mark, such as an identification mark on a product.
- **RegMove:** an external signal interrupts the search motion, which is immediately followed by the second motion.
- Accuracy of mark detection < 1µs

## Input of motion sets via set table

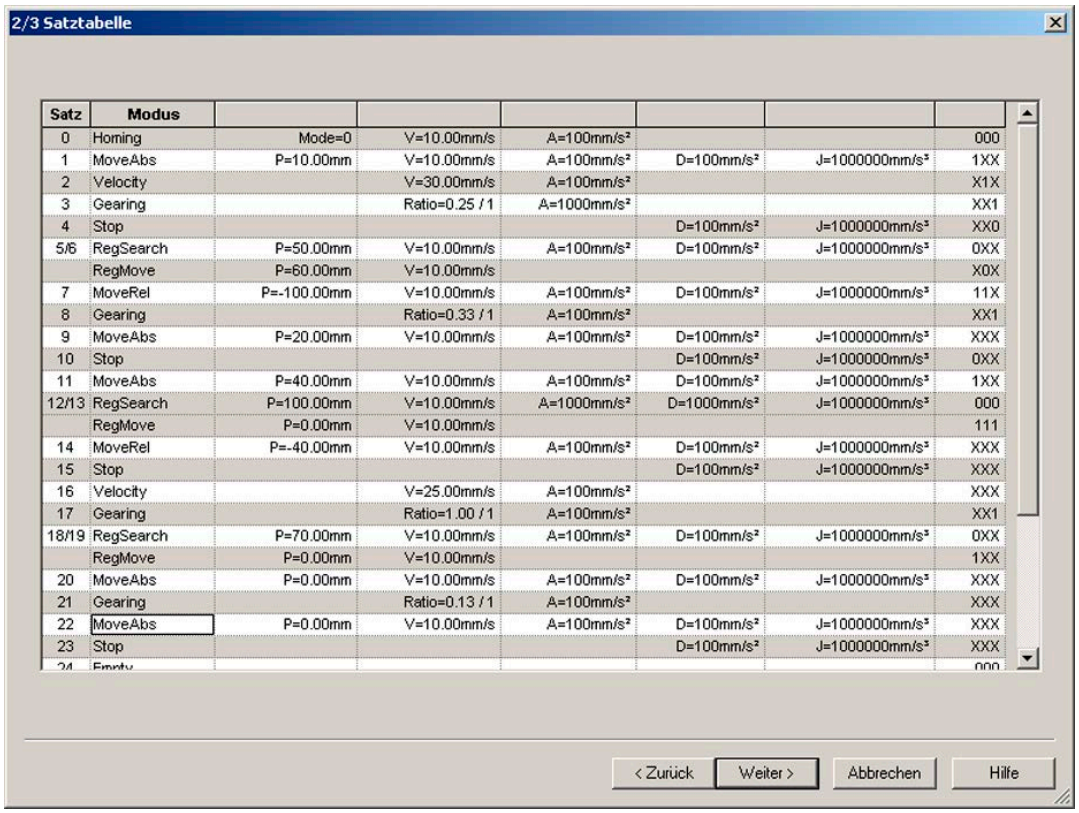


| Satz | Modus | | | | | | |
|---|---|---|---|---|---|---|---|
| 0 | Homing | Mode=0 | V=10.00mm/s | A=100mm/s² | | | 000 |
| 1 | MoveAbs | P=10.00mm | V=10.00mm/s | A=100mm/s² | D=100mm/s² | J=1000000mm/s³ | 1XX |
| 2 | Velocity | | V=30.00mm/s | A=100mm/s² | | | X1X |
| 3 | Gearing | | Ratio=0.25 / 1 | A=1000mm/s² | | | XX1 |
| 4 | Stop | | | | D=100mm/s² | J=1000000mm/s³ | XX0 |
| 5/6 | RegSearch | P=50.00mm | V=10.00mm/s | A=100mm/s² | D=100mm/s² | J=1000000mm/s³ | 0XX |
| | RegMove | P=60.00mm | V=10.00mm/s | | | | X0X |
| 7 | MoveRel | P=-100.00mm | V=10.00mm/s | A=100mm/s² | D=100mm/s² | J=1000000mm/s³ | 11X |
| 8 | Gearing | | Ratio=0.33 / 1 | A=100mm/s² | | | XX1 |
| 9 | MoveAbs | P=20.00mm | V=10.00mm/s | A=100mm/s² | D=100mm/s² | J=1000000mm/s³ | XXX |
| 10 | Stop | | | | D=100mm/s² | J=1000000mm/s³ | 0XX |
| 11 | MoveAbs | P=40.00mm | V=10.00mm/s | A=100mm/s² | D=100mm/s² | J=1000000mm/s³ | 1XX |
| 12/13 | RegSearch | P=100.00mm | V=10.00mm/s | A=1000mm/s² | D=1000mm/s² | J=1000000mm/s³ | 000 |
| | RegMove | P=0.00mm | V=10.00mm/s | | | | 111 |
| 14 | MoveRel | P=-40.00mm | V=10.00mm/s | A=100mm/s² | D=100mm/s² | J=1000000mm/s³ | XXX |
| 15 | Stop | | | | D=100mm/s² | J=1000000mm/s³ | XXX |
| 16 | Velocity | | V=25.00mm/s | A=100mm/s² | | | XXX |
| 17 | Gearing | | Ratio=1.00 / 1 | A=100mm/s² | | | XX1 |
| 18/19 | RegSearch | P=70.00mm | V=10.00mm/s | A=100mm/s² | D=100mm/s² | J=1000000mm/s³ | 0XX |
| | RegMove | P=0.00mm | V=10.00mm/s | | | | 1XX |
| 20 | MoveAbs | P=0.00mm | V=10.00mm/s | A=100mm/s² | D=100mm/s² | J=1000000mm/s³ | XXX |
| 21 | Gearing | | Ratio=0.13 / 1 | A=100mm/s² | | | XXX |
| 22 | MoveAbs | P=0.00mm | V=10.00mm/s | A=100mm/s² | D=100mm/s² | J=1000000mm/s³ | XXX |
| 23 | Stop | | | | D=100mm/s² | J=1000000mm/s³ | XXX |
| 24 | Empty | | | | | | 000 |

## Speed control
Velocity

- Defined by the speed and the acceleration

## Stop movement
Stop

- The Stop set interrupts the current motion set

## Functions: positioning with function blocks

- Device-specific function blocks:
  - for generating an input process image
  - for generating an output process image
  - as access to motion set table

- PLC open function blocks
- Programmable according to IEC 61131-3
- Programming system: Codesys
- Up to 6,000 instructions
  - IEC 61131-3 standard modules, such as timers, triggers, counters, etc.

## Function blocks for the RK-Control 2S

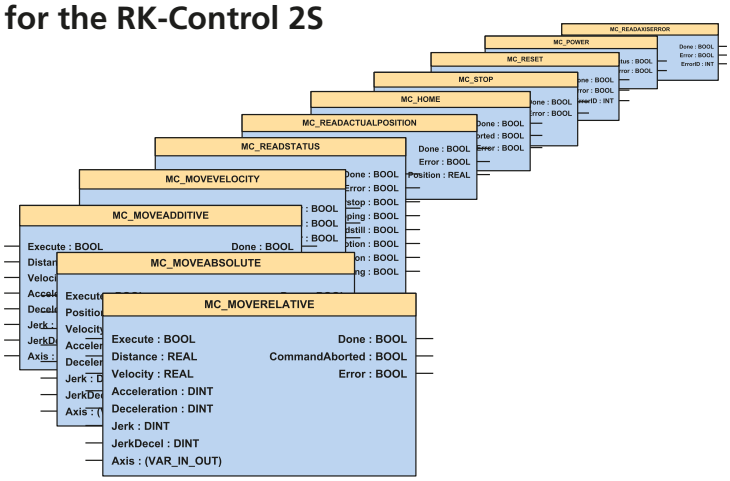


- Absolute positioning
- Stop
- Reading the axis error
- Relative positioning
- Machine zero
- Acknowledgement of errors
- Additive positioning
- Energising the output stage
- Reading the current position
- Continuous positioning
- Reading the device status
- Electronic gears

## IEC 61131-3

IEC 61131-3 is the only globally supported programming language for industrial automation that is company and product-independent.

IEC 61131-3 includes graphical and textual programming languages.

- Instruction list
- Structured text
- Ladder diagram
- Sequential function chart
- Function block diagram

Instruction list (IL)

```
LD    A
ANDN  B
ST    C
```

Structured text:

```
C := A AND NOT B
```

Ladder diagram:

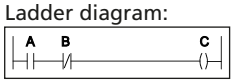


Function block diagram:

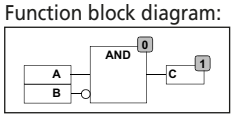


## Programming with CoDeSys

CoDeSys is a development environment for programming that enables considerable time savings when creating your application.

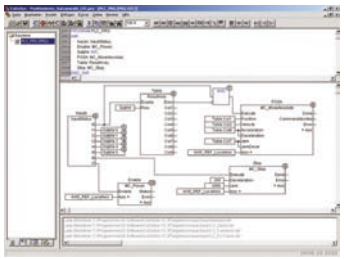

- Globally established high-performance development environment
- Complete offline simulation
- Visual elements
- Data exchange between devices of different manufacturers

- Complete online functionality
- Sophisticated technical features
- Comprehensive project management
- Included free of charge

## Order data - RK-Control 2S

| Code No. | Control | Standard | Positioning | Positioning with function blocks | Fieldbus | Additional I/O |
|---|---|---|---|---|---|---|
| 79391A1A11 | 2.5A | – | • | – | – | – |
| 79391A1B11 | 2.5A | – | • | – | – | • |
| 79391A2A11 | 2.5A | – | • | • | – | – |
| 79391A3A11 | 2.5A | – | • | – | Profibus DP | – |
| 79391A4A11 | 2.5A | – | • | • | Profibus DP | – |
| 79392A1A11 | 6.3A | – | • | – | – | – |
| 79392A1B11 | 6.3A | – | • | – | – | • |
| 79392A2A11 | 6.3A | – | • | • | – | – |
| 79392A3A11 | 6.3A | – | • | – | Profibus DP | – |
| 79392A4A11 | 6.3A | – | • | • | Profibus DP | – |
| 79393A1A11 | 7.5A | – | • | – | – | – |
| 79393A1B11 | 7.5A | – | • | – | – | • |
| 79393A2A11 | 7.5A | – | • | • | – | – |
| 79393A3A11 | 7.5A | – | • | – | Profibus DP | – |
| 79393A4A11 | 7.5A | – | • | • | Profibus DP | – |
| on request | 15A | – | • | – | – | – |
| on request | 15A | – | • | – | – | • |
| on request | 15A | – | • | • | – | – |
| on request | 15A | – | • | – | Profibus DP | – |
| on request | 15A | – | • | • | Profibus DP | – |

## Initiator box

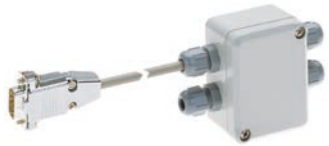

- For the wiring of initiators or limit switches to the RK-Control 2S
- Prefabricated and shielded cables with connector for the RK-Control 2S

| Code No. | Type | | For control unit |
|---|---|---|---|
| 95706011_ _ _ | Initiator box | Drag chain-compatible | All RK-Control 2S units |

**Cable length:**
0 2 5 = 2,5 m
0 5 0 = 5,0 m
0 7 5 = 7,5 m
1 0 0 = 10,0 m
1 5 0 = 15,0 m

## Shielded cables



- Prefabricated with connectors from RK-AC 112 to RK-AC 800 and ring terminals from RK-AC 1252 to RK-AC 2521
- The connectors of motor and feedback cables contain a special surface shield

| Code No. | Type | For motors |
|---|---|---|
| **Cable for fixed, static installation** | | |
| 95702611_ _ _ | Resolver cable | All RK-AC servo motors |
| 95702511_ _ _ | Motor cable | Servo motors from RK-AC 112 to RK-AC 800 |
| on request | | Servo motors from RK-AC1252 to RK-AC2521 |
| **Cables for use in drag chains** | | |
| 95702611_ _ _FLEX | Resolver cable | All RK-AC servo motors |
| 95702511_ _ _FLEX | Motor cable | Servo motors from RK-AC 112 to RK-AC 800 |
| on request | | Servo motors from RK-AC1252 to RK-AC2521 |

**Cable length** (cable lengths > 15 m available on request):
0 2 5 = 2,5 m
0 5 0 = 5,0 m
0 7 5 = 7,5 m
1 0 0 = 10,0 m
1 5 0 = 15,0 m

## Interface cable



| Code No. | Type | For control unit |
|---|---|---|
| 957010_ _ _ | Interface cable SSK 1 | RS232, PC <–> RK-Control 2S |

**Cable length** (cable lengths > 5 m available on request):
0 2 5 = 2,5 m
0 5 0 = 5,0 m

## Ballast resistors



- The energy generated during braking is initially absorbed by the internal storage capacity of the RK-Control 2S.

If this capacity is insufficient, the braking energy is discharged via a ballast resistor

| Code No. | Type | | For control unit |
|---|---|---|---|
| 95701011 | Ballast resistor BRM 08/01 | 100 ohms, 60 W continuous | RK-Control 2S 2.A |
| 95700811 | Ballast resistor BRM 05/01 | 56 ohms, 180 W continuous | RK-Control 2S 6.3A and 7.5A |
| 95702311 | Ballast resistor BRM 05/02 | 56 ohms, 570 W continuous | RK-Control 2S 7.5A |
| on request | Ballast resistor BRM 10/02 | 47 ohms, 1500 W continuous | RK-Control 2S 15A |

## Terminal block

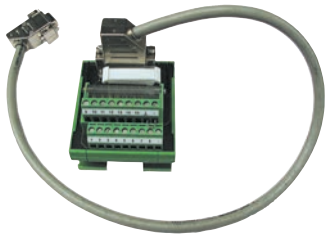

- For the further wiring of inputs and outputs + additional inputs and outputs
- An extra terminal block is required for additional inputs and outputs
- Can be mounted in control cabinet on a standard DIN rail
- Incl. 2.5 m prefabricated cable, from the RK-Control 2S to the terminal block

| Code No. | Type | Cable length | For control unit |
|---|---|---|---|
| 95701611 | Terminal block | 2.5 m | All RK-Control 2S units |

## Switching power supply



- The switching power supply is required if no 24 V DC is available

| Code No. | Type | For control unit |
|---|---|---|
| 957061 | switching power supply 24 V DC, 5A | All RK-Control 2S units |
| 957062 | switching power supply 24 V DC, 10 A | All RK-Control 2S units |

# Modules

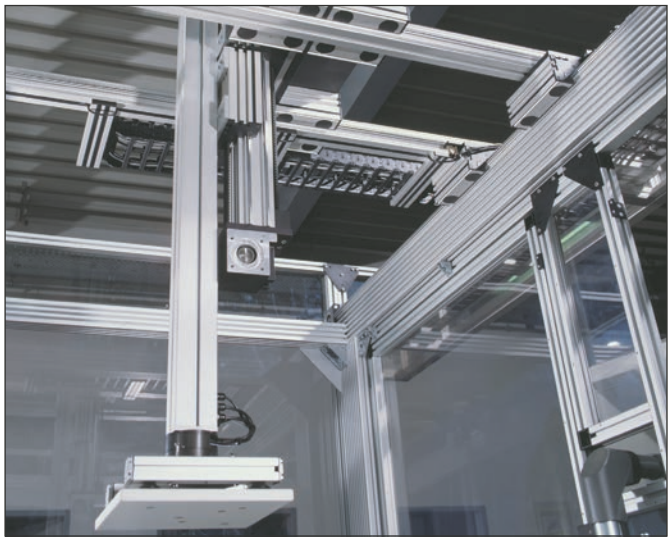



The wide range of possible applications demonstrates how useful and practical it is to standardise our range at component level. This is often not possible or practical at module level.

The following shows a few basic modules that we have already successfully implemented.

Please contact us for further details!



Our product consultants can help you choose the optimum solution for your requirements or develop something completely new.

RK ROSE+KRIEGER




Linear Technology ..... Page 576 - 577

Connecting Technology ..... Page 578

Profile Technology ..... Page 580


# Modules

# Modules - Linear Technology

We offer a range of electric motors for our electric cylinders and linear actuators. Of course, other drives can also be used.

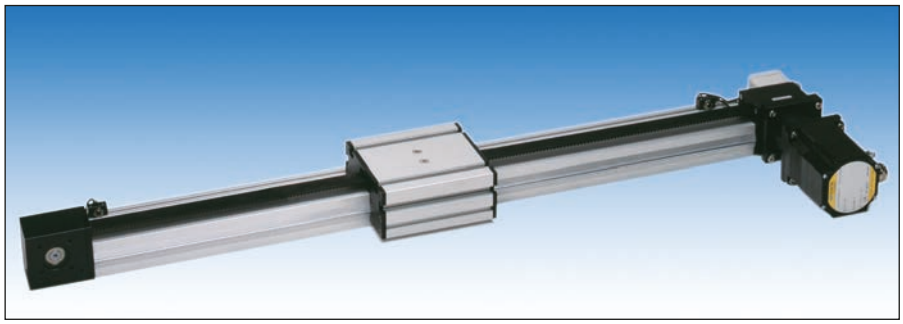

**Linear actuator with motor**



**Electric cylinder with motor**

We also stock suitable connecting and fixing elements for parallel or two/three-dimensional linear actuator combinations.

You too can benefit from our experience!

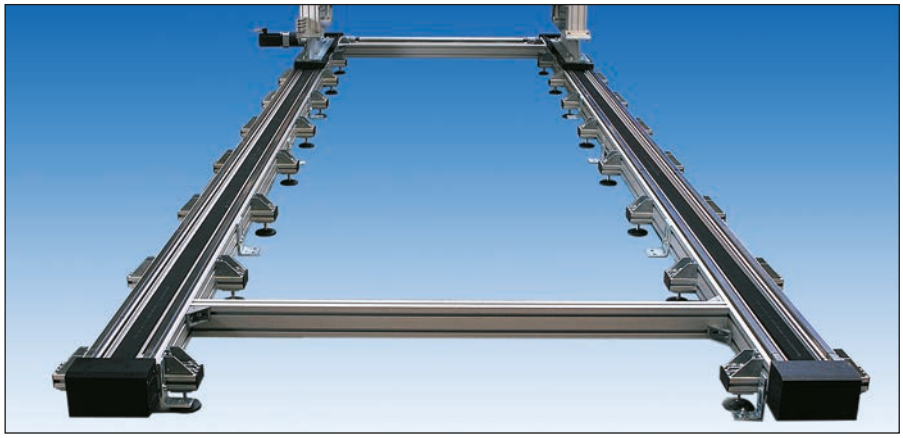

**Parallel actuator module**

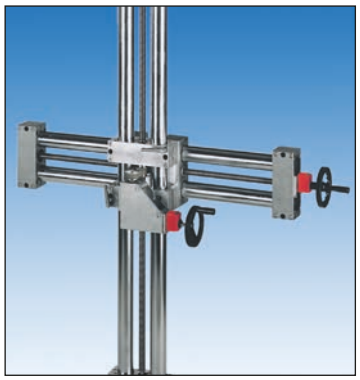

**Two-actuator module**

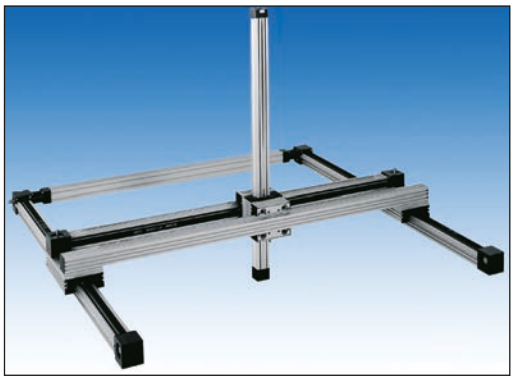

**Three-actuators module**

The movement of two or more lifting columns in a single module can be carried out as a parallel or synchronous adjustment.

We have the controls and the compensating elements and can tell you how to implement them successfully.



**Parallel adjustment, 2-columns**



**Synchronous adjustment, 4-columns**

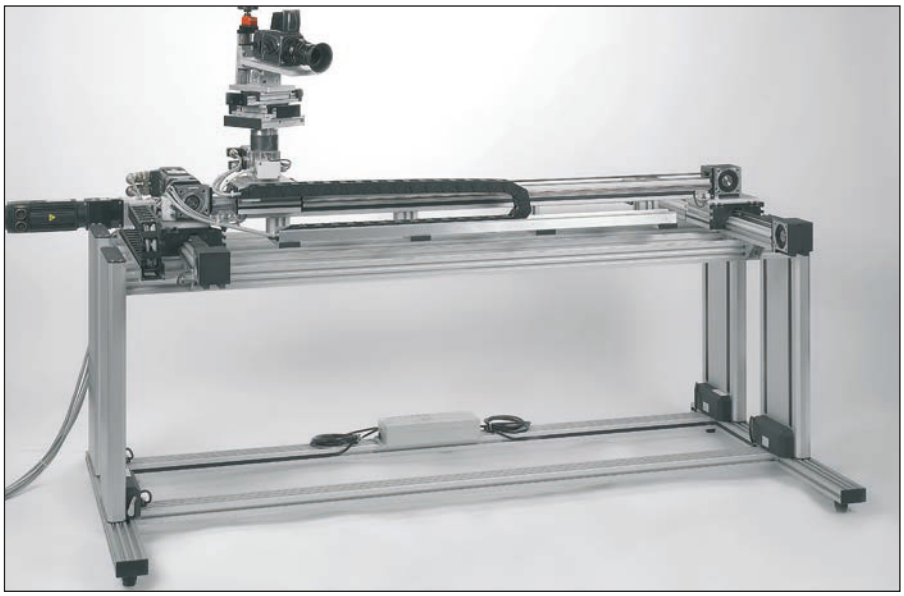

# Modules - Connecting Technology

It rather defeats the object to modularise or standardise variable, reliable and permanent connections.

Benefit from our experience so that your connection is successfully maintained.













# Modules - Profile Technology

Our safety guard elements and assembly workplaces are an excellent compromise between cost and variability.

The applications are as varied as the tasks that are performed with the products.

Our products offer you an ideal balance between modularity and individuality.



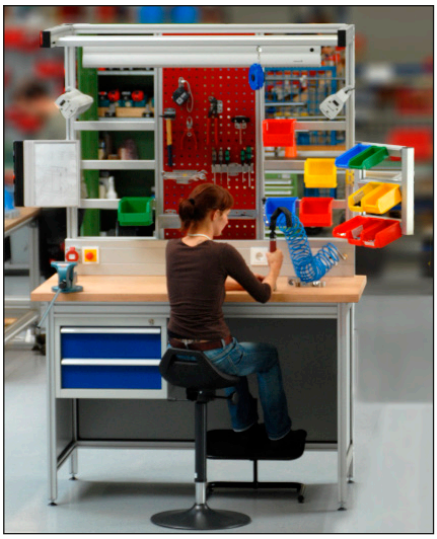




CNC - Bearbeitungsautomat
RK Komponenten:

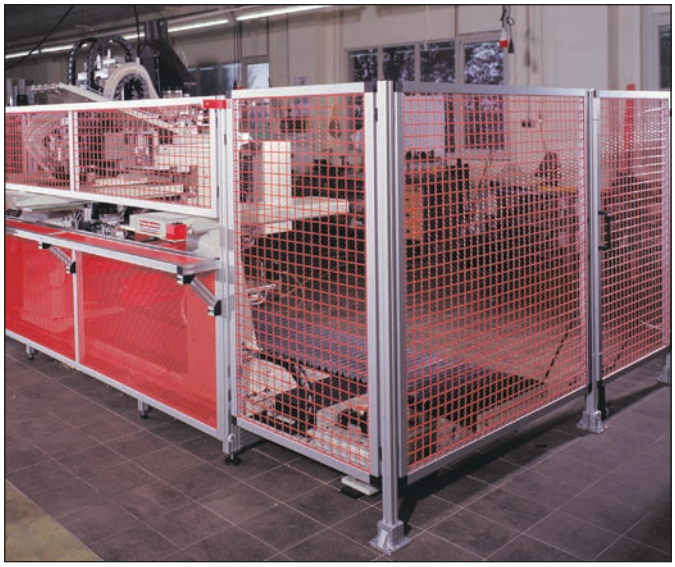

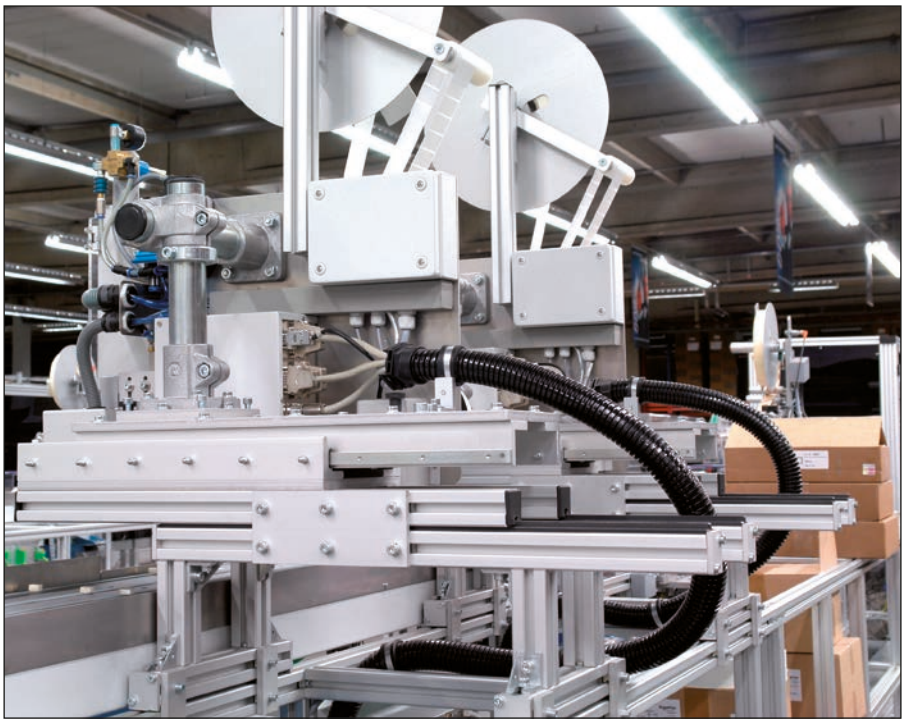

# Appendix

RK ROSE+KRIEGER



## Lubricants, Enquiry Forms, Application Examples, Glossary, Index


Lubricants ..... Page 584
Accessories ..... Page 585

Enquiry forms ..... Page 586 - 590

Single actuators ..... Page 586
Systems ..... Page 587
Controls ..... Page 588
Lifting columns & E-cylinders ... Page 589
Heavy duty cylinders ..... Page 590

Application examples ... Page 592 -593

Glossary ..... Page 594 - 597

Index ..... Page 598 - 599


# Appendix

## Lubricants



Copper paste

All RK Rose+Krieger products are lubricated prior to delivery.
Re-lubrication intervals will depend on the number of operating hours, work loads and environmental conditions (large fluctuations in temperature, high air humidity, aggressive environment, etc.).

The lubricants listed below are used during the manufacture and assembly of our linear components. To ensure smooth running and a long lifetime, we recommend the following products:

### For screws and ball bearings

**Lithium soap + mineral oil**

| | |
|---|---|
| DIN 51502 | KP1K -30 |
| Temperature range: | -30° to +120°C |
| Consistency class | NLGI 1 |

**Corresponds to the following manufacturer names:**

| | |
|---|---|
| Shell | Alvania EP1 |
| ESSO | Beacon EP1 |
| BP | Energrease LS EP1 |
| Fina | Marsan L1 |
| Elf | Epexa 1 |
| Mobil | Mobilux EP1 |

### For screws and ball bearings

**Copper paste**

| | |
|---|---|
| Temperature range: | -60° to +1100°C |

**Corresponds to the following manufacturer names:**

| | |
|---|---|
| OKS | OKS 245 |
| Klüber | Wolfracout CP |
| Molykote | Molykote Cu 7439 PLUS |

### For COPAS angular drives and PLS profile linear units

**Industrial gear oil**
DIN 51517 Part 3
AGMA, No. 2EP-No. 8EP
ISO VG 220

**Corresponds to the following manufacturer names:**

| | |
|---|---|
| Shell | Omala Oil 220 |
| ESSO | Spartan EP 220 |
| BP | Energol GR-XP 220 |
| Fina | Giran 220 |
| Elf | Reduct elf SP 220 |
| Apig | Blasia 220 |
| Mobil | Mobilgeur 630 |

**Automotive gear oil**
DIN 51512
SAE J306
SAE 90 GL4

**Corresponds to the following manufacturer names:**

| | |
|---|---|
| Shell | Spirax EP 90 |
| ESSO | Geur Oil GPD 85-90 |
| BP | Energear EP 90 |
| Fina | Pontonic N85-90 |
| Elf | Trans elf EP 90 |
| Apig | Rotra HY 90 |
| Mobil | Mobilube GX-A 85-90 |

## Piston grease gun



| Code No. | Type |
|---|---|
| 95930 | For oil and grease lubrication |

# Fax: +49 (0)571 9335-119

**Telephone: +49 (0)571 9335-0**
**e-mail: anfrage.vertrieb@rk-online.de**

**Company** ..... **Cust. No.** .....

**Street** ..... **City** .....

**Telephone** ..... **Fax** .....

**Contact** ..... **Dept.** .....

**Remarks** .....

.....

**Sketch**

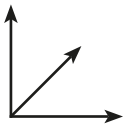

| | | | |
|---|---|---|---|
| **No. of single actuators** | ..... of which | ❍ horizontal | ❍ vertical |
| **Weight load** | ..... N | | |
| **Positioning accuracy** | ...../300 mm | Repeatability: | ..... mm |
| **The linear unit** | ❍ is fully supported | ❍ is supported on end elements only | ❍ ..... |
| **Travel/stroke** ..... | | | |
| **Speed** | v = ..... m/min. | | |
| **Acceleration** | a = ..... $m/s^2$ | Time: ..... sec. | |
| **Cycle time** | t = ..... sec. | Please specify motion sequence if known! | |
| **Drive** | ❍ handwheel | ❍ motor | |
| **Limit switch** | ❍ no | ❍ yes | |
| **Positioning control** | ❍ no | ❍ yes (for further details, please refer to the enquiry form “Controls”) | |

**Ambient conditions** .....

Submission of offer/date: .....

Remarks: .....

.....

**RK Rose+Krieger GmbH • Verbindungs- und Positioniersysteme • Postfach 1564 • 32375 Minden, Germany**

# Enquiry form
# Systems

RK ROSE+KRIEGER

## Fax: +49 (0)571 9335-119

**Telephone: +49 (0)571 9335-0**
**e-mail: anfrage.vertrieb@rk-online.de**

**Company** ..... **Cust. No.** .....

**Street** ..... **City** .....

**Telephone** ..... **Fax** .....

**Contact** ..... **Dept.** .....

**Remarks** .....

.....

**1.) Application** (motion sequence, explanation, sketch of linear unit, installation position of linear unit, mechanism of action of load, applicable requirement specifications, factory standards. – Please also refer to the application examples on page 592.)

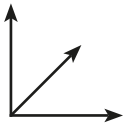

**2.) Selection criteria**

**3.) Max. weight load of carriage** ..... N

**4.) Travel speed of axes**

**x-axis:** $v_x$ = ..... m/min.
**y-axis:** $v_y$ = ..... m/min.
**z-axis:** $v_z$ = ..... m/min.

**5.) Min. acceleration time of axes**

**x-axis:** $t_x$ = ..... sec.
**y-axis:** $t_y$ = ..... sec.
**z-axis:** $t_z$ = ..... sec.

**6.) Strokes of axes**

**x-axis:** $s_x$ = ..... mm
**y-axis:** $s_y$ = ..... mm
**z-axis:** $s_z$ = ..... mm

**7.) Control/motor** ❍ yes (for further details, please refer to the enquiry form "Controls")

**8.) Drag chain** ❍ yes ❍ no

**9.) Baserframe** ❍ yes (sketch) ❍ no

**10.) Positioning accuracy** ..... mm **Repeatability** ..... mm

**11.) Ambient conditions** .....

Submission of offer/date: .....
Remarks: .....

.....

**RK Rose+Krieger GmbH • Verbindungs- und Positioniersysteme • Postfach 1564 • 32375 Minden, Germany**

# Fax: +49 (0)571 9335-119

**Telephone: +49 (0)571 9335-0**
**e-mail: anfrage.vertrieb@rk-online.de**

**Company** ..... **Cust. No.** .....

**Street** ..... **City** .....

**Telephone** ..... **Fax** .....

**Contact** ..... **Dept.** .....

**Remarks** .....

.....

**1) Application** (Sketch of motion sequence or explanation)

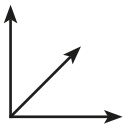

**2.) Drive type known?**

- ❍ yes
- ❍ no (see Item 3.)
- ❍ three-phase motor
- ❍ with frequency converter
- ❍ stepper motor
- ❍ servo motor+ control

**3.) Position control**

If master control system installed, control via

- ❍ yes ❍ no
- ❍ pulse/direction (standard)
- ❍ inputs/outputs (positioning)
- ❍ fieldbus type .....
- ❍ autonomous program sequence in motor power section

**Travel to ..... positions is required** (positioning via function blocks)

**The positions are always the same** ❍ yes ❍ no

**Cycle time max.** ..... sec.

**Cable length between motor and control**..... m

Submission of offer/date: .....

Remarks: .....

.....

**RK Rose+Krieger GmbH • Verbindungs- und Positioniersysteme • Postfach 1564 • 32375 Minden, Germany**

# Enquiry form
# Lifting columns & E-cylinders

RK ROSE+KRIEGER

## Fax: +49 (0)571 9335-119

**Telephone: +49 (0)571 9335-0**
**e-mail: anfrage.vertrieb@rk-online.de**

**Company** ..... **Cust. No.** .....

**Street** ..... **City** .....

**Telephone** ..... **Fax** .....

**Contact** ..... **Dept.** .....

**Remarks** .....

.....

❍ **Lifting column** ❍ **Electric cylinder**

**1.) Where is the lifting column/electric cylinder to be positioned?** .....

.....

**2.) Lifting force [N]** ..... Load on during 2.1 pushing ❍ and/or 2.2 pulling ❍

**3.) Travel mm]** ..... **Lifting speed** desired ..... mm/s

**4.) Lifetime [DH]** .....

**5.) Operating cycles = No. of double strokes (forwards and backwards movement)**

per ❍ minute ❍ hour ❍ day average...../max. .....

**6.) Voltage**

..... volt direct-current (DC)
..... volt single phase AC ..... Hz
..... volt three-phase AC .....Hz

**7.) Position indication**

7.1 in the limit positions ❍ yes ❍ no
7.2 continuously by potentiometers ❍ yes ❍ no

**8.) Parallel connection**

8.1 Do you wish to operate two or more systems with a single switch/protection device? ❍ yes ..... ❍ no
8.2 Do you require synchronous operation of two or more systems? ❍ yes, quantity ..... ❍ no

**9.) Environment**

9.1 ❍ dry ❍ dusty ❍ damp
9.2 IP protection class ...../temperature ..... °C

**10.) Limit positions**

| | | |
|---|---|---|
| 10.1 Do you require in-built limit switches? | ❍ yes | ❍ no |
| 10.2 Do you want to limit the travel by means of external limit switches? | ❍ yes | ❍ no |
| 10.3 Do you want the limit switch(es) to be adjustable? | ❍ yes | ❍ no |
| 10.4 Do you require additional switches for intermediate positions? | ❍ yes | ❍ no |
| 10.5 Do you require closing pressure? | ❍ yes | ❍ no |

**11.) Limited installation dimensions?**
If yes, please enclose sketch showing installation situation. ❍ yes ❍ no

**12.) No. of units required .....**

**13.) Are you already using similar systems?** ❍ yes ❍ no

Submission of offer/date: .....

Remarks: .....

.....

**RK Rose+Krieger GmbH • Verbindungs- und Positioniersysteme • Postfach 1564 • 32375 Minden, Germany**

# Fax: +49 (0)571 9335-119

**Telephone: +49 (0)571 9335-0**
**e-mail: anfrage.vertrieb@rk-online.de**

**Company** ..... **Cust. No.** .....

**Street** ..... **City** .....

**Telephone** ..... **Fax** .....

**Contact** ..... **Dept.** .....

**Remarks** .....

.....

**1.) What is the cylinder required to move?** .....

.....

**2.) Type/Model/Orientation**

❍ **LZ70 FL** ❍ **LZ70 PL**

❍ **LZ80** ❍ **LZ80 FL** ❍ **LZ80 PL**

❍ **SLZ90 S** ❍ **SLZ90 P** ❍ **SLZ90 W**

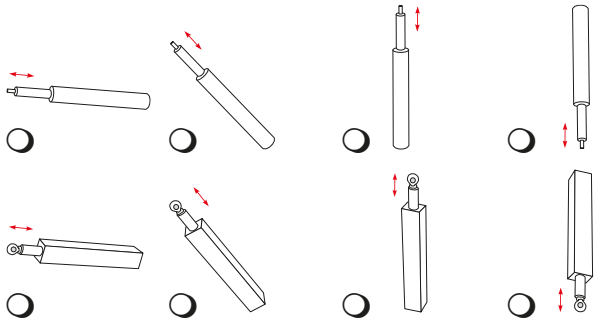

**3.) Max. lifting force [N]** .....

**4.) Static load [N]** .....

**5.) Lifting speed [mm/s]** .....

**6.) Stroke length [mm]** .....

**7.) Type of fastening (SLZ90 only)** ❍ Eye bolt pivot bearing foot ❍ Eye bolts (not for SLZ90 S)

**8.) Ambient temperature** ..... °C
(standard -20°C to +60°C)

**9.)** Operating voltage [V] .....

**10.) Required protection class** .....
(standard: IP 54)

**11.)** ❍ **Frequency converter operation planned**

**12.) Operating cycles = no. of double strokes (forwards and backwards movement)**
per ❍ minute ❍ hour ❍ day average...../max. .....

**13.) Radial forces [N]** .....
(avoid if possible)

**14.) No. of units required** .....

**15.) Is there a risk of personal injury if the drive fails?**
(avoid if possible)

**16.) Compliance with any specific regulations required?**
.....

Submission of offer/date: .....

Remarks: .....

**RK Rose+Krieger GmbH • Verbindungs- und Positioniersysteme • Postfach 1564 • 32375 Minden, Germany**

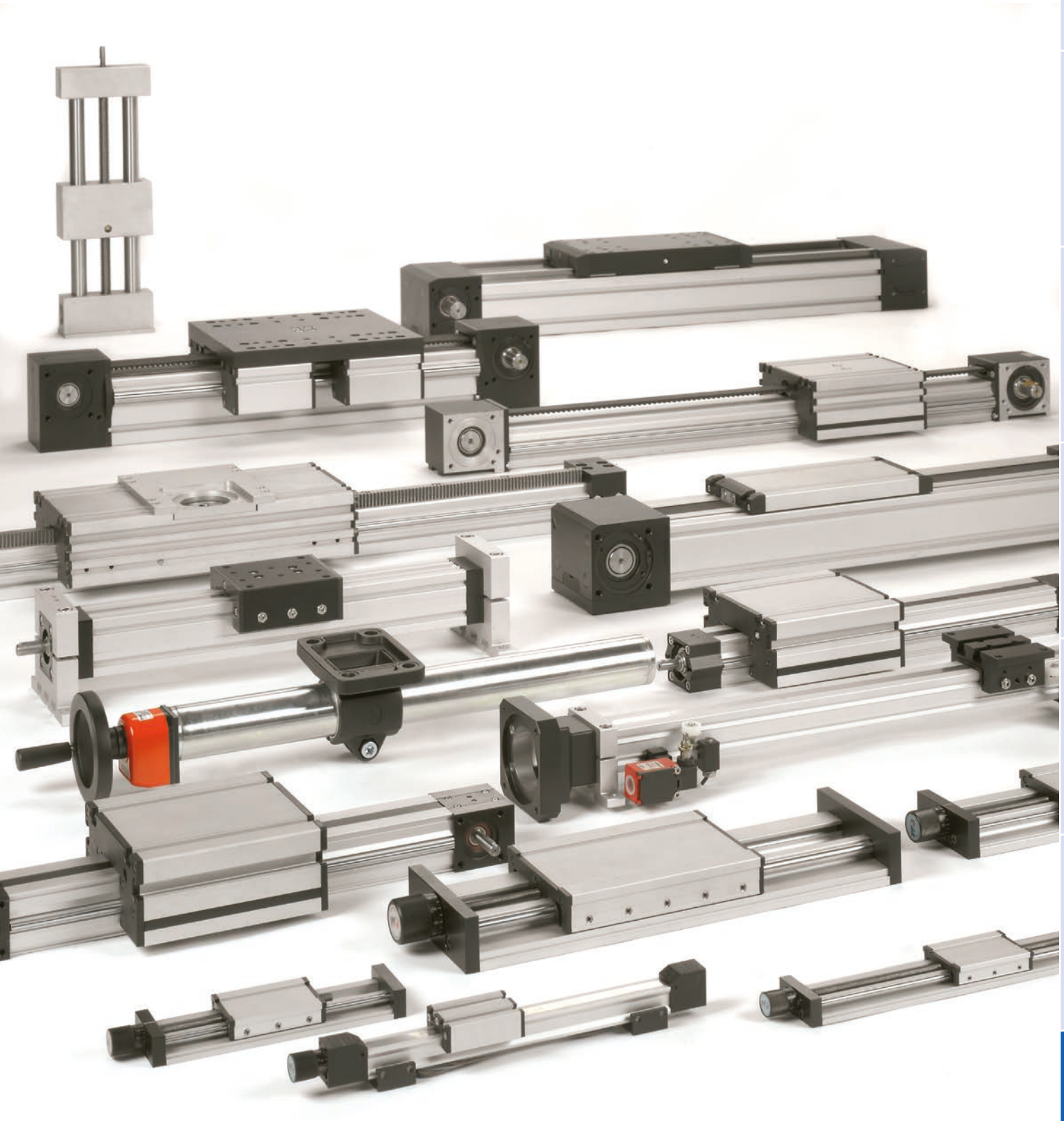

## Application examples

You can use the numbers below instead of the sketch in the enquiry form (see pages 586-590).

Profile movement

Carriage movement

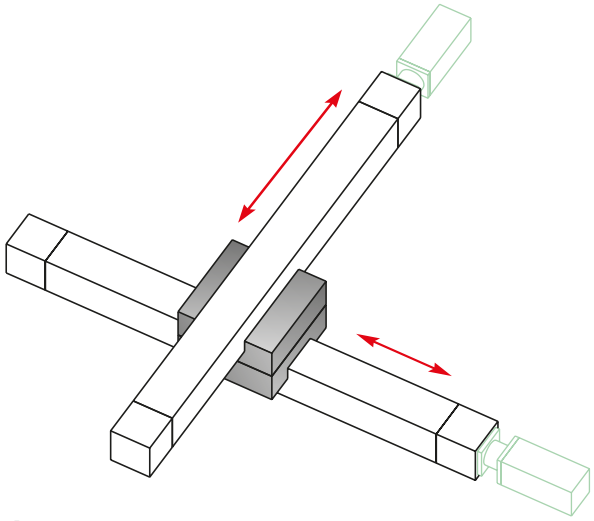

1

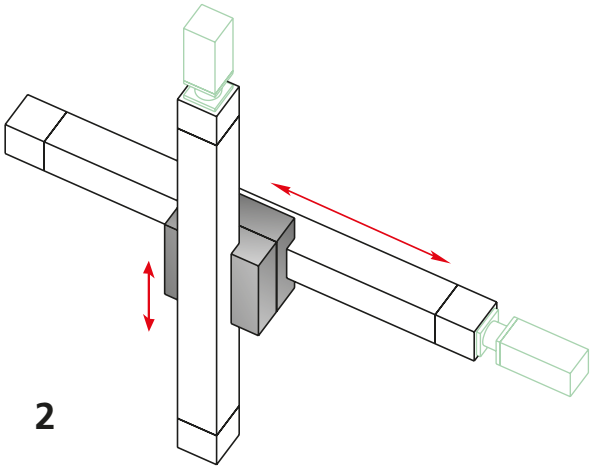

2

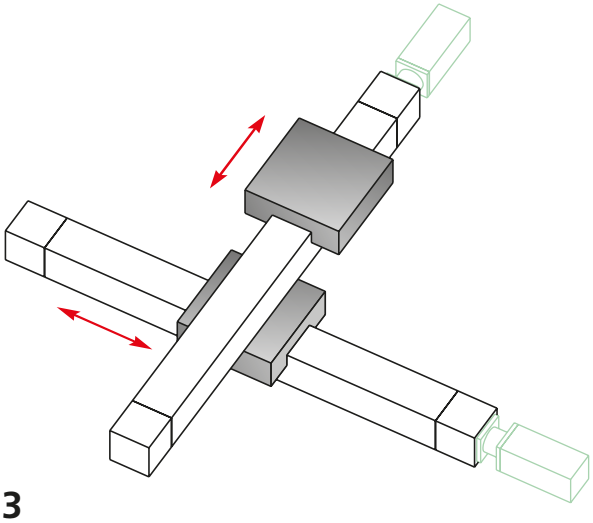

3

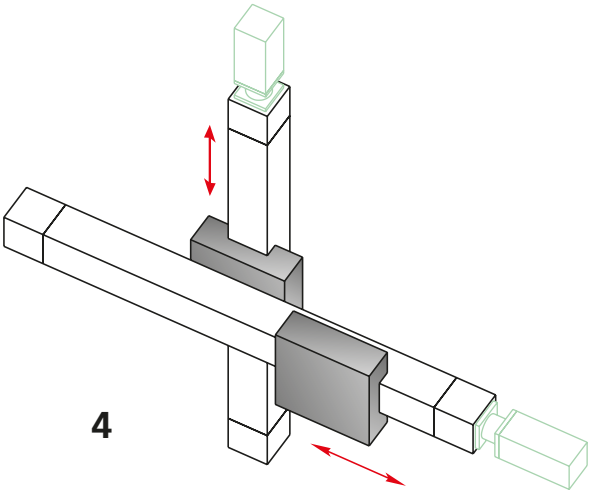

4

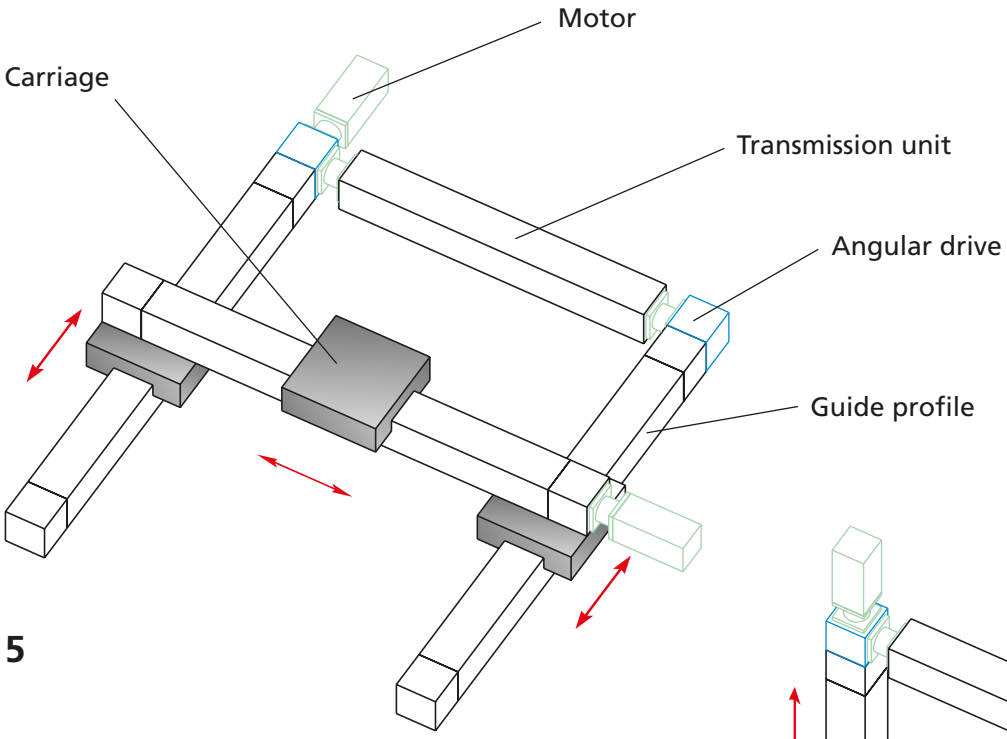
Motor
Carriage
Transmission unit
Angular drive
Guide profile

5

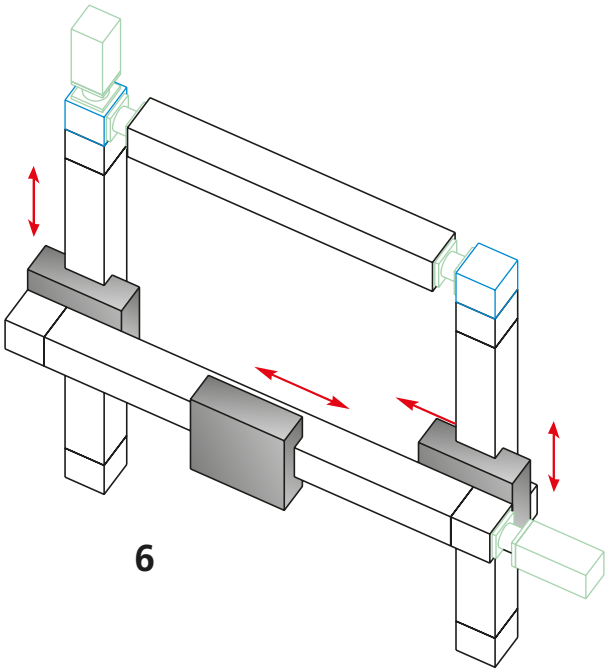

6

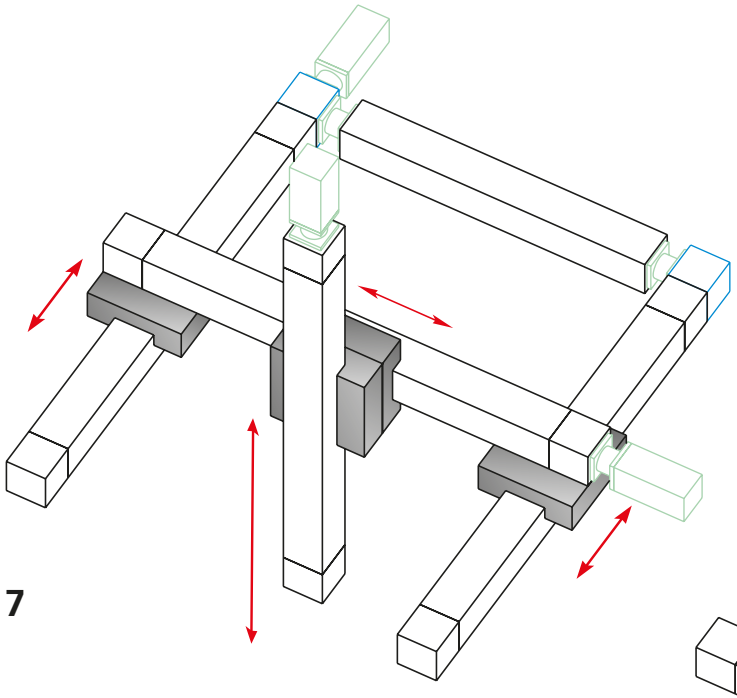

7

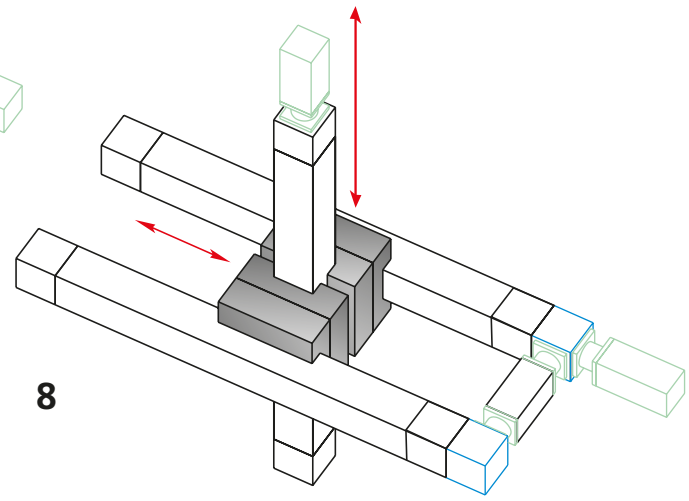

8

# Glossary

**Adjustment load:** Each drive type has a different, structurally-dependent, adjustment load. This variable defines the maximum compressive and tractive force that a drive can handle (for linear drives). The adjustment load is always a so-called dynamic load. The drive still performs reliable adjusting movements under the specified maximum load. The adjustment load is defined in terms of Newtons (N), whereby the following applies: 1 kg » 10 N.

**Ambient temperature:** RK linear units are designed for ambient temperatures of up to +80°C. Linear units are not suitable for temperatures below freezing point.
It is important to check the ambient conditions of each individual case (temperature, temperature fluctuations, installation position, load, air humidity, etc.), and to check that the necessary accessories (motor, proximity switch, etc.) meet all requirements.
Timing belts should be protected against exposure to UV rays to prevent premature ageing.

**Backlash:** In the case of spindle units, backlash is caused by flank clearance between the spindle and the lead nut. Flank clearance is the play required due to manufacturing tolerances, thermal expansion and lubrication. This play is approx. 0.2 mm for ACME screw drives and approx. 0.1 mm for ball screw drives. In the case of ball screw drives, it is also possible to use (on request) pre-tensioned lead nuts that are low backlash or backlash-free.

**Basic length:** This value is used to dimension the length of a linear unit. The basic length corresponds to the total length of a linear unit without travel. Please specify the total length (basic length + travel) in millimetres when you place your order.

**BLOCAN:** Product name of the RK Rose+Krieger aluminium profile system with patented connection system, which permits the quick and easy assembly of very different structures. These profiles are available in a wide range of cross-sections and sizes.

**Carriage:** Components that are to be positioned can be fixed to the carriage, which is moved along the guide profile on rollers, ball rail systems or slide guides. Different models are available, depending on the application.

**Checkback signal:** A technical means for the detection of the current position and speed of the drive. A distinction is made between the relative (incremental) and absolute (analogue) method.
***Incremental (relative):***
A so-called Hall sensor generates a fixed number of electrical impulses for each distance travelled. The control then calculates up-to-date information on the current position and speed relative to a defined reference point. In order to ensure the reliable operation of the drive, it is essential that a correct reference value is always available. However, if this reference value is lost, such as in the unlikely event of a power failure or a malfunction, it is essential to specify a new reference point.
***Analogue (absolute):***
In this case, the position/speed is detected using a so-called potentiometer. This electronic component is permanently coupled to the drive movement and adjusts its resistance value according to the current position. The control uses this information to calculate the current position and speed. This type of position determination does not require a reference point as all potentiometer values are constantly available.

**Control:** The control combines the various functions required to operate the drive. The switching signals of a hand switch are converted to control functions for the connected drives. At the same time, the control contains facilities for power supply and various protection devices to protect against overloads and short-circuits.
Transformer control:
The hand switch controls electromechanical relays, which, in turn, control the drive currents (the most common control technology).

**Duty cycle (max):** This technical variable defines the maximum time period that a drive can be operated continuously. This maximum period must be followed by a specified idle time. Both values are defined in the specified duty cycle (DC) in relation to one another. In the case of drive systems, 2/18 min has become standard in the field of drive technology, i.e. 2 minutes of continuous operation must be followed by 18 minutes idle time. It therefore follows that if the unit is operated for a shorter period, the idle time can also be shortened respectively. It is essential to ensure adherence to these specifications for periodic duty; failure to do so may cause the unit to overload and trigger protection equipment.

***Timing-belt/rack:***
The timing-belt and the linear roller guide used are both suitable for a duty cycle of up to 100%.
***Acme and ball screw drive:***
The following values have been proven in the field. The upper limit for an acme screw drive should be

<= 30% per hour, while a ball screw drive supports a duty cycle of up to 100%.

***Slide and roller guide:***
The upper limit for a slide guide should be <= 30% per hour, while a linear ball bearing and guideway assembly supports a duty cycle of up to 100%.

**Guide profile:** This profile is the base body of a linear unit. The carriage moves along the profile and is positioned either manually or by means of a spindle or timing-belt. The guide profile comprises an extruded aluminium profile specially designed for a linear unit or a profile from the BLOCAN range.

**Hand switch:** The operator can use this device to control the full range of drive functions. A press of the button generates switching signals, which are converted to corresponding control signals in the control system.
***Standard:***
The hand switch is directly connected to the control system via a connecting cable; transmission of the switching signals is hard-wired.
***Infra-red (IR)/radio:***
Instead of the standard hand switch, an infra-red/radio receiver is connected to the control interface. The switching signals sent by the IR/radio remote control are picked up by the receiver and relayed on to the control. The IR transmitter and receiver must always have visual contact as data transmission is performed via light signals in the infra red range.

**Installation dimension:** This dimension specifies the installation length of the respective drive. Installation length = Basic length + Travel

**Installation position:** The linear units can be installed in any position. However, it must be ensured that all forces and moments fall within the tolerance range of the respective unit and do not exceed the maximum values. Ensure compliance with any pertinent installation and assembly instructions.

**Lifting column:** Single actuator with a special, often design-oriented linear guide. This actuator is able to reliably withstand lateral forces and ensure the necessary stability even in a fully extended position while taking the maximum torques into account.

**Load values:** All maximum forces and moments specified in various chapters refer to middle (axial) or upper edge (radial) of the carriage.

**Memory synchronous drive:** This kind of actuator is equipped with a position and stroke detection system. Information on the current position of the drive is continuously transmitted back to a synchronised control system. This memory drive is generally used in applications where the stored data can be retrieved with the simple press of a button. They are also required in applications with synchronous/memory controls.

**Neoprene timing-belt properties:** Moderate chemical resistance (solvents, oils etc.), optimised GT tooth shape compared to HTD, excellent running behaviour, low noise level, maximum load-bearing capacity (can withstand high loads up to 120°C), not suitable for clean room applications.

**No-load torque:** The moment that the drive must produce in order to move the carriage (without load). The values specified in the catalogue are empirical reference values, which may vary due to manufacturing tolerances.

**Positioning accuracy:** The ability of the linear unit drive to reach a set (absolute) position once from any starting point. For tolerances, please refer to the respective chapter.

**Power cable feedthrough:** Additional voltage tap for the supply of external devices.

**Protection class:** The impermeability of electronic devices against the penetration of foreign bodies and liquids is defined by means of a two-digit IP code The first number refers to the level of ingress protection against solid materials, such as dust, and the second to ingress protection against liquids. The most common protection classes are IP 20 (touch protection); IP 44 (water spray protection); IP 66 (water jet protection).

**PU timing-belt properties:** Good chemical resistance (solvents, greases, petrol etc.), available in black or white (on request) , good load-bearing qualities, HTD tooth shape, reduced load-bearing capacity from 60°C, suitable for clean rooms, food-safe versions available on request.

**Self-locking:** The self-locking function is often required to prevent undesired reverse movements.
***Spindle units:*** The self-locking function is influenced

by the coefficient of friction and the lead angle. If the lead angle is smaller than the coefficients of friction, the spindle drive is self-locking. The coefficients of friction may be subject to certain manufacturing tolerances (differences in the finish quality of the spindle/nut, lubrication). Clamping devices (clamping lever) may be required for safety reasons.
***ACME screw drive:*** Only self-locking to a certain degree. Check each case individually, particularly in the case of vertical installation.
***Recirculating ball screw drives:*** These are not generally self-locking. It is therefore necessary, particularly in the case of vertical installation, to install suitable motors with holding brakes, or, if using a handwheel to make adjustments, to ensure an additional locking device is fitted.
***Timing-belt units:*** These types are not generally self-locking. It is therefore necessary to install suitable motors with holding brakes, especially if the linear unit is installed vertically.

**Service life of drives:** The lifetime depends on the drives used and the application.
Depending on the system, there is a considerable difference between the lifetime of ball screw drives and acme screw drives. The lifetime of the drives is also affected by the control systems used and the associated duty cycles. As a guideline for acme screw drives, a stroke of 500 mm, with adherence to the permitted loads and duty cycles, we estimate a lifetime of 10,000 double strokes. Any changes of application will effect a corresponding change in the expected lifetime of the drive. Ball screw drives are expected to have a considerably longer lifetime. Please contact us if you require any further advice and we will be happy to assist.

**Service life of linear units:** The lifetime of linear units with timing belt or ball screw drive depends on the application and expected operating factors. Under normal conditions (adherence to the permitted load, moments, speed, duty cycle and temperature, as well as clean ambient conditions) and with adherence to maintenance intervals, a linear unit can achieve a lifetime of at least 10,000 operating hours. However, it must be taken into account that the travel path should be at least 2-3 times the length of the carriage.

**Straightness/torsion:** The aluminium profiles used for RK Profile linear units are extruded profiles, which may show some deviations with regard to straightness and torsion due to the production process. The permitted range of deviation is specified in DIN 17615. While, in a worst case scenario, the deviations of the RK profile linear units may correspond to the specified limit values, as a general rule, they will fall well within the tolerance range. In order to achieve the desired guiding accuracy, it may be necessary to use levelling plates to align the linear unit or to affix it to a precisely aligned supporting surface.

**Stroke:** In the case of lifting columns and electric cylinders, the maximum travel is referred to as stroke.

**Stroke length:** The stroke length corresponds to the maximum distance travelled by the carriage. The design must take into account acceleration and deceleration distances, space for limit switches and any overshoot.

**Speed:** The maximum speed that can be achieved by the linear unit is determined by the feed constant of the mechanical drive element and the drive speed. In practice, the necessary acceleration and deceleration distances must be taken into account with reference to operating parameters (acceleration, load to be moved). Maximum linear speeds are often not attainable due to the required acceleration and deceleration distances or the theoretically required drive values.
The maximum possible speeds can be found in the relevant chapters for individual product ranges.

**Synchronous control:**
The synchronous operation of several drives at the same speed is possible even in the case of widely ranging loads. This technology is always used if a single adjusting movement is implemented via more than one drive (such as the height adjustment of workplaces).

**Synchronous operation:** Synchronised drives are used for the simultaneous movement of several mechanically connected columns. “Standard” drives are generally not able to meet the requirements of such applications.
The following section contains some brief information on the best way to set up a synchronous system. More detailed information on this subject can be downloaded at our web site www.rk-rose-krieger.com (Service/Download Documents/Technical Manuals).

The following errors can occur during set-up:

***Different heights:***

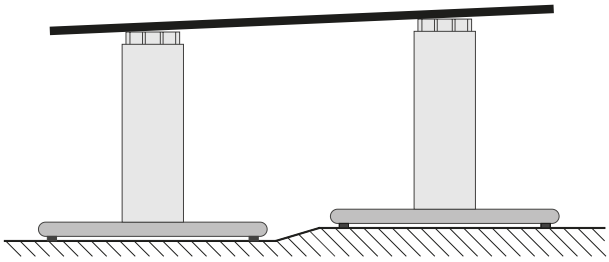

A rigid connection between the lifting columns aligns them at the same height. Fixing the table frame in place may cause the lifting columns to distort.

***Parallel alignment:***

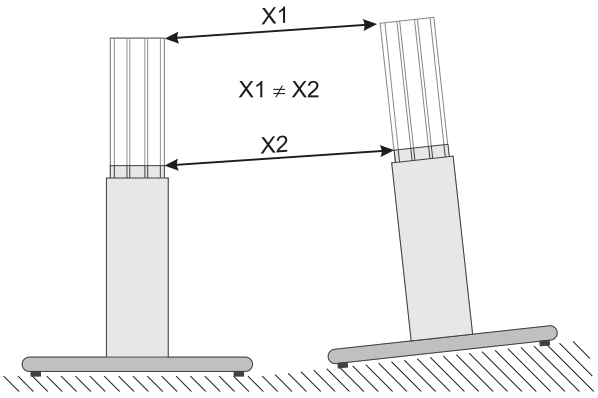


If the lifting columns are not parallel, the distance between the two upper fixing points will change during the movement. But a rigid connection keeps this distance constant, and this means that the lifting columns are subject to very strong forces.

***Distorted table frame:***

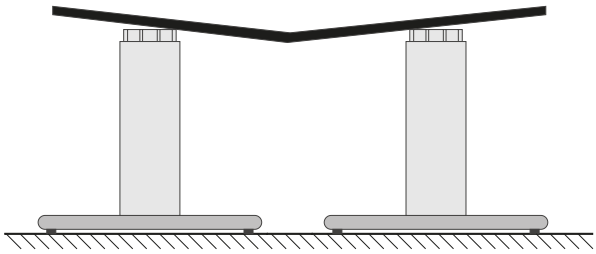

Table frames are generally made of welded steel tubes and connecting plates that connect to the lifting columns. If the connecting plates are not lying flat on the lifting column, the synchronous system will distort during screw attachment.

Failure to address these mechanical errors may impair the running properties of the drive, shorten lifetime or damage the lifting column. If using an electronic control system, this may cause the output of error messages and render the system inoperable.

***Ideal set-up:***

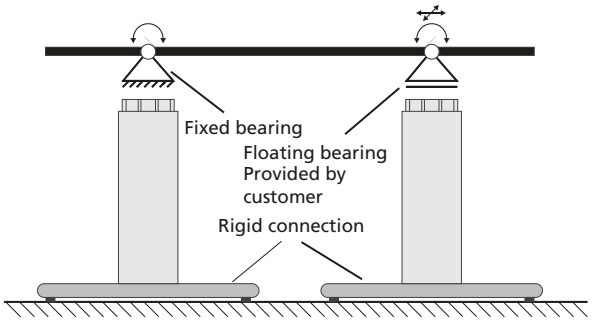


Surfaces at the foot and top of the columns must be at the same height, parallel to one another and as flat and even as possible, the columns themselves must also be aligned so that they are completely parallel. Existing tolerances and height differences due to control deviations are offset by means of a customer-provided floating bearing.

**Repeatability:** Repeatability is the ability of the linear unit drive to return to a once reached position within the given tolerance limits under identical conditions.
Factors that influence repeatability (and positioning accuracy) include: load, speed, delay, direction of movement and temperature.

**Weight:** The weight specified in the catalogue is a theoretical value, which may vary due to technical modifications or manufacturing tolerances.

# Index


## A

Accessories ..... 531
Adaptor for EP(X) angular drive ..... 102
Angle drive ..... 127
Angular drive ..... 68, 102, 224, 267
Angular drive housing ..... 68
Angular gear for COPAS-actuators ..... 155
Angular gear for PLS ..... 249
Angular gear for RK DuoLine S ..... 469
Application examples ..... 592

## B

Ballast resistors ..... 572
Bearing block for Clevis ..... 288, 298, 498
Bearing block for Swivel ..... 289, 299, 499
Bevel gear set ..... 69, 101, 127, 224
Bracket for inductive limit switch ..... 377, 389
Bracket for mechanical limit switch ..... 157, 389

## C

Cable Interface ..... 572
Cap for combination cube ..... 225
Carriage ..... 214
Carriages ..... 36, 54, 202
Centering Sets ..... 404, 464
Chain-type motor connecting cable ..... 533
Chain wheel ..... 67, 100, 126
Clamping bars ..... 190, 463
Clamping brackets ..... 191
Clamping lever ..... 41, 65
Clamping levers ..... 221
Clamping strips ..... 403
Clevis ..... 288, 298, 498
Combination angle ..... 192
Combination cube ..... 225
Combination flange ..... 225
Combination plate ..... 192
Connecting adaptor 30-40 ..... 358
Connecting adaptor 30-50 ..... 338
Connecting and transmission unit ..... 226
Connecting and transmission unit 30-40 ..... 358
Connecting and transmission unit 30-50 ..... 338
Connecting options for LZ S/P ..... 529
Connecting plate ..... 150
Connecting slots ..... 306, 506
Controls ..... 530
Controls for linear axes
3 phase frequency converter FW ..... 558
RK-Control 2S ..... 562
Coupling ..... 70, 105, 129, 153, 194, 229
..... 247, 267, 342, 362, 376, 388, 433
for transmission unit 30-50 ..... 338, 358
Coupling with expansion hub ..... 550
Cover clips ..... 64
Cover profile ..... 409, 471

## D

Drive key for carriages ..... 59
Drive shaft ..... 406

## E

EHL ..... 524
Electronic handwheel ..... 522
E limit switch holder ..... 74
Enquiry form ..... 586–590
External inductive limit switch ..... 409, 471

## F

Feet
Pivot bearing foot ..... 309, 311, 315, 509, 515
Fixing elements ..... 38, 60–63, 174, 218, 244
Fixing plate ..... 82, 172, 193, 244, 336
Foot switch ..... 531
Fork attachment for Swivel head ..... 289, 299, 499

## G

Glossary ..... 594
Guide shaft / guiding tube ..... 82

## H

Hand switches ..... 531
Handwheel ..... 42, 66, 100, 126, 151
..... 175, 194, 222, 245
Heavy duty cylinder - LZ 70/80 FL/PL ..... 488
Heavy-duty cylinder LZ 80 ..... 284
Heavy duty cylinders SLZ 90 ..... 504
SLZ 90 P ..... 310
SLZ 90 W ..... 314
Heavy duty cylinder - SLZ 90 ..... 304
Holder for inductive limit ..... 131
Holder for inductive limit switch ..... 435, 443
Holder for limit switch
mechanical and inductive ..... 233
Holder for mechanical limit switch ..... 108, 251, 364
Holder for ninductive limit switch ..... 109
HTD timing belt pulley ..... 126
HTD timing-belt pulley ..... 67, 101

## I

Inductive limit switch ..... 74, 109, 179, 195, 232
..... 268, 346, 365, 435, 443
Initiator box ..... 571
Internal inductive limit switch ..... 409, 471

## L

Limit switch holder ..... 178
LM/LMZ ..... 366
Lubricants ..... 584
LZ S/P ..... 528

## M

Magnetic switch ..... 291, 303, 317, 503, 517
Mechanical limit switch ..... 108, 131, 157, 178, 232
..... 251, 268, 408, 434, 443, 526, 471
Motor adapter ..... 376, 388
Motor adapter kit
for RK AC servomotors ..... 406, 470

Motor adaptor ..... 104, 128, 153, 175, 194, 228 ..... 247, 266, 341, 361, 432
for 3 phase motors ..... 502
for linear units ..... 525, 530
Motor adaptor for three-phase motor ..... 70
Motor adaptor kit
for 3 phase and servo motors ..... 302
Motor adaptors/couplings
for 3-phase motors ..... 552
for servo motors ..... 554
for stepper motors ..... 553
Motor cables/resolver cables ..... 545
Move-Tec overview ..... 22–25
MultiLine ..... 378

## N

Network filter ..... 572

## O

Overview of Control-Tec ..... 446

## P

Phoenix Mecano ..... 4–5
Piston grease gun ..... 585
PL ..... 238, 326
Place-Tec overview ..... 320
PLM connecting plate ..... 173
PLM linear unit ..... 160
PL/PLS II ..... 234
PLS ..... 240
Positioning indicator ..... 43, 73, 107, 130 ..... 156, 176, 195, 230, 250

## Q

Quad EV profile actuator ..... 204

## R

Reducing bush ..... 551
Reducing bushes ..... 40
RK Compact linear unit ..... 180
RK DuoLine R 60/80/120 ..... 396, 454
RK DuoLine R 60/80 Clean ..... 414, 480
RK DuoLine S ..... 258–259, 448
RK DuoLine S 60/80/120/160 ..... 452
RK DuoLine S 80 ..... 270
RK DuoLine Safelock ..... 392, 450
RK DuoLine S linear unit ..... 254
RK DuoLine S/R Clean ..... 474
RK DuoLine S Safelock ..... 460
RK DuoLine Z 60/80/120/160 ..... 394
RK DuoLine Z/R ..... 390
RK DuoLine Z/R Clean ..... 410
RK DuoLine Z Safelock ..... 400
RK SyncFlex A
Axial adjustment for LZ 70 ..... 301, 501
Roller guide actuator/guides
PL/PLZ/PLZ-i ..... 322
SQ /SQZ ..... 348

## S

Safelock ..... 392, 450
Scale ..... 72, 106, 230
Selection guide ..... 9–18
Servo motors
RK-AC 112 ..... 541
RK-AC 118 ..... 539
RK-AC 240 ..... 539
RK-AC 260 ..... 541, 542
RK-AC 345 ..... 542
RK-AC 470 ..... 540
RK-AC 800 ..... 543
RK-AC 1252 ..... 543
RK-AC 1776 ..... 544
RK-AC 2521 ..... 544
Servo technology - RK Control 2S ..... 562
Shaft bracket ..... 82
Shrink disc ..... 550
Slot stone ..... 172, 288
Type -B- ..... 403, 463
Type -K- ..... 264, 374, 386, 403, 430, 442, 463
Type -N- ..... 245, 336, 374, 386, 403, 430, 442, 463
Type -R- ..... 300,317, 500, 517
SQ ..... 352
SQL linear guide ..... 196
SQ MT ..... 424
SQ ZST ..... 436
Switching power supply ..... 536
Stepper motors PD 6S ..... 534
Support blocks for
trunnion mounting ..... 290, 300, 500
Swivel ..... 289, 299, 499
Swivel head ..... 288, 298, 498

## T

Terminal block ..... 573
Threaded bar ..... 265
Three-phase motors ..... 532
Torque adapter ..... 551
Transmission ..... 466
Transmission unit ..... 68, 387
Transmission unit 60-80 ..... 375
Transmission unit 60-80 ..... 339, 359
Trunnion mounting set ..... 290, 300, 500

## W

Wing screw1 ..... 74
Wiper set ..... 202

While every effort has been made to ensure that the information in this catalogue was correct at the time of publication, no responsibility can be accepted for any errors or omissions.
This catalogue supersedes all previous catalogues. In the interest of further technical development, we reserve the right to make modifications without prior notice.
You can download all the latest catalogue data at our web site. **www.rk-rose-krieger.com**